SYRACUSE CITY

Syracuse City Special Business Agenda
October 23, 2012 – 6:00 p.m.
City Council Conference Room
Municipal Building, 1979 W. 1900 S.

1. Meeting called to order
   Invocation or thought**
   Pledge of Allegiance
   Adopt agenda
2. Public Comment: This is an opportunity to address the Council regarding your concerns or ideas. Please limit your comments to three minutes.
3. Approval of Minutes:
   a. Work Session Meeting of October 9, 2012
4. Consideration of Joint Development Agreement between Syracuse City and Ninigret.
5. Adjourn

~~~~~

In compliance with the Americans Disabilities Act, persons needing auxiliary communicative aids and services for this meeting should contact the City Offices at 801-825-1477 at least 48 hours in advance of the meeting.

CERTIFICATE OF POSTING

The undersigned, duly appointed City Recorder, does hereby certify that the above notice and agenda was posted within the Syracuse City limits on this 19th day of October, 2012 at Syracuse City Hall on the City Hall Notice Board and at http://www.syracuseut.com/. A copy was also provided to the Standard-Examiner on October 19, 2012.

CASSIE Z. BROWN, CMC
SYRACUSE CITY RECORDER
~~~~~

COUNCIL AGENDA

October 23, 2012

Agenda Item **#3** Approval of Minutes.

Factual Summation

- The minutes will be added to the drop-box by the close of business on Friday, October 19.
- Please see the attached draft minutes of the following meeting:
    - Work Session Meeting of October 9, 2012.
- Any question regarding this agenda item may be directed at Cassie Brown, City Recorder.

Staff Recommendation

Approve the draft minutes of the October 9, 2012 Work Session Meeting.

COUNCIL AGENDA

October 23, 2012

Agenda Item **#4** Consideration of Joint Development Agreement between Syracuse City and Ninigret.

Factual Summation

- Any questions regarding this item can be directed at City Attorney Will Carlson. Please note that exhibit B to the agreement will be provided by Ninigret and exhibits H and I do not yet exist as they are not to be drafted until a future date upon development of the site.

AGREEMENT FOR THE DEVELOPMENT
OF THE SYRACUSE SR-193 ECONOMIC DEVELOPMENT PROJECT AREA

This Agreement for the Development of the Syracuse SR-193 Economic Development Project Area (this "Agreement") is made and entered into as of this _____ day of _____, 2012 (the "Effective Date"), by and among NINIGRET CONSTRUCTION COMPANY NORTH, L.C., a limited liability company (the "Developer"), the REDEVELOPMENT AGENCY OF SYRACUSE CITY, a body corporate and politic of the State of Utah (the "Agency") and SYRACUSE CITY, UTAH (the "City"). The Developer, the Agency and the City are sometimes referred to individually in this Agreement as a "Party" and collectively as the "Parties."

RECITALS

A. In furtherance of the objectives of the Community Development and Renewal Agencies Act, Utah Code Ann. 17C-3-101, et. seq. (the "Act"), the Agency has undertaken the creation of an economic development area for the development of a certain geographic area known as the "Syracuse SR-193 Economic Development Project Area" (the "Project Area"), located in the City; and

B. The Agency has approved and the City Council of the City has adopted an economic development project area plan and budget which is attached hereto as Exhibit A (the "Project Area Plan") providing for the development of real property located in the Project Area and the future use of such land; and

C. The Developer desires to construct within the Project Area a development for office, industrial, and light manufacturing and other business park activities, along with other related improvements including but not limited to on and off site improvements related to the development, landscaping, hardscaping and similar public improvements ancillary and necessary to the development (collectively, the "Project"); and

D. The Agency believes that the development of the Project is in the vital and best interests of the Agency, and in the best interests of the health, safety, and welfare of City residents, and in accord with the public purposes and provisions of the applicable laws of the State of Utah (the "State") and requirements under which the Project Area and its development is undertaken and is being assisted by the Agency; and

E. On the basis of the foregoing and the undertakings of the Developer pursuant to this Agreement, and to enable the Agency to achieve the objectives of the Project Area Plan, the Agency is willing, in the manner set forth herein, to assist the Developer in the development of the Project for the purpose of accomplishing the provisions of the Project Area Plan, and the provisions of this Agreement;

NOW THEREFORE, in consideration of the covenants and agreements set forth in this Agreement, and for other good and valuable consideration, the receipt and sufficiency of which are hereby acknowledged, the Parties hereby agree as follows:

ARTICLE I

SUBJECT PROPERTY

Section 1.1 Ownership of the Subject Property. The Agency acknowledges and agrees that it has received evidence satisfactory to the Agency that the Developer has acquired all right, title and interest in and to certain real property more particularly described in Exhibit B attached hereto and depicted as "Parcel 1" on Exhibit C attached hereto (the "Project Real Property") together with all of Developer's: (i) right, title and interest in and to adjacent streets, alleys, easements and other rights-of-way appurtenant to the Project Real Property (the "Project Rights-of-Way"); and (ii) rights and interests appurtenant to the Project Real Property, including, without limitation, all easements for access, parking and utilities over, across, under and upon other properties located near or adjacent to the Project and such other rights in and/or to the Project and/or such other near or adjacent properties (collectively, the "Other Project Site Rights"; and collectively with the Project Real Property and the Project Rights-of-Way, the "Subject Property"). If from time to time the Developer sells or otherwise disposes of a portion of the Project Real Property, such defined term for the purposes herein shall thereafter refer to and include solely the remaining real property owned by the Developer.

ARTICLE II

DEVELOPER'S OBLIGATIONS

Section 2.1 The Developer hereby agrees to the following:

(a) Development of Facilities. The Developer shall construct or cause to be constructed the facilities that constitute a portion of the Project for a minimum useful life of 30 years on the Project Real Property. The Project will be constructed in accordance with (i) the Developer's Project Plan dated _____, 2012 and attached hereto as Exhibit D (the "Developer Plan"), (ii) to the extent permitted by law, the current land use development and building codes of the City, except as provided herein (the "City's Vested Laws"), attached hereto as Exhibit G; and (iii) in accordance with the zoning, subdivision, development, growth management, transportation, environmental, open space, and other land use plans, policies, processes, ordinances, and regulations in existence and effective on the date of final approval of this Agreement, and applying the terms and conditions of this Agreement (clauses (i) through (iii) being referred to herein collectively as the "Construction Standards"). The construction of the Project shall be subject to the City's General Plan updated and approved July 31, 2012.

(b) Truck Access to Project. Throughout the construction and use of the Project, the Developer, its subcontractors and tenants, shall refrain from accessing the Project from 700 South using vehicles with double axles. The Developer shall ensure that all construction contracts, subcontracts and tenant agreements contain a similar provision imposing on such individuals the same requirement. If the Developer, or any of its employees, agents or contractors is found to be in violation of this subsection, which determination shall be made in the sole discretion of the Agency, the Developer shall pay the Agency a fee in the amount of $100.00 per occurrence, which amounts shall be reduced from the Property Tax Rebate (defined below) due to the Developer.

(c) Water Shares. Due to the need of providing irrigation water for the Project, the Developer shall convey to the City water rights that are usable by and acceptable to the City which provide a minimum of sixty acre feet (60 a.f.) of water annually during normal water years.

(d) Development Infrastructure/On-site Improvements. The Developer shall construct and develop, in accordance with the Construction Standards, all applicable City standards and specifications, all on-site improvements, including but not limited to, storm water detention facilities, drainage facilities, sidewalks, curb and gutter, roads both ingress and egress as required to access the Project, landscaping, trails, water systems, sanitary sewer, street lighting, fencing and/or walls, flood control and other improvements required by the City as part of the site plan and subdivision approval process.

(e) Off-Site Improvements. The Developer shall be responsible for the construction and completion of the following off-site improvements:

(i) The Developer shall cause the eastern portion of 1000 West, between 200 South and 450 South to be expanded by no less than three (3) feet in width (or the greater equivalent amount if the western portion of 1000 West is expanded by more than three (3) feet) concurrently with any expansion of 450 South west of Parcel 1, as depicted in Exhibit D attached hereto.

(ii) The Developer shall obtain all necessary approvals from relevant sewer, water, or other local districts as appropriate, if any related to water/sewer improvements, for both on and off-site infrastructure required to be completed by Developer.

(f) Payment of Fees. The Developer shall pay when due all required building permit fees, site plan review fees, impact fees, development fees, and other fees related to the Project and the Project Real Property required by this Agreement or City and State law. In the event the fees are not paid prior to settlement of the Property Tax Rebate (as defined herein), the Agency shall be able to deduct the payment of said fees from the Property Tax Rebate (along with any other available remedies).

(g) Payment of Ad Valorem Taxes and Supplemental Payments. The Developer shall pay all real and personal property taxes (the "ad valorem taxes") for the Project Real Property based on the taxable value of the Project Real Property (the "Assessed Taxable Value"). For each tax increment year, all ad valorem taxes and assessments levied or imposed on the Project Real Property, any of the improvements, and any personal property on site shall be paid annually by the Developer or current owner on or before the due date which is currently set by law as November 30th. The Developer shall have the right to protest or appeal the amount of Assessed Taxable Value and taxes levied against the Project Real Property by the County Assessor, State Tax Commission or any lawful entity authorized by law to determine the ad valorem taxes against the Project Real Property, the improvements, personal property on the Project Real Property, or any portion thereof in the same manner as any other taxpayer as provided by law. The Developer shall, however, notify the Agency in writing within ten (10) calendar days of the Developer's or then current property owner's filing of any protest or appeal of such assessment determination or taxes and provide a copy to the Agency of any protest or appeal of such assessment and information submitted as part of the protest or appeal. In addition, the Developer shall give to the Agency written notice at least fifteen (15) calendar days prior to the time and date of such protest or appeal is to be heard. The Agency shall have the right, without objection by the Developer, to appear at the time and date of such protest or appeal and to present oral or written information or evidence in support of, or objection to the amount of assessment or taxes which should or should not be assessed against the real or personal property of the Business Park Real Property.

ARTICLE III

AGENCY AND DEVELOPER OBLIGATIONS AND UNDERTAKINGS

Section 3.1 Agency Participation.

(a) The Agency has created the Project Area for improvements related to the Project. The Agency has determined that without public participation, land acquisition and public infrastructure costs create a significant barrier to attracting private capital and investment. The Developer agrees to construct or cause to be constructed, subject to reasonable commercial expectations and conditions, not less than approximately Fifty Million dollars ($50,000,000) of incremental assessed value related to the Project on or before September 2018. In consideration of the Developer's performance of its obligations under this Agreement, and subject to the conditions, terms and limitations set forth in this Agreement, including those set forth in Article II, the Agency agrees to rebate to the Developer, for qualified Project expenditures, up to 100% of the tax increment revenues received by the Agency from the Tax Increment Area (as defined in the Project Area Plan), after payment of:

(i) administrative expenses related to the Project Area, which estimated amounts are shown in Exhibit E hereto (the "Administrative Expenses"),

(ii) amounts payable to US Cold Storage equal to 30% of the tax increment revenues received by the Agency solely from the property owned by US Cold Storage, for a period of ten years beginning April 15, 2014, up to a maximum dollar amount of $1,200,000, and depicted as the southern half of parcel 1 in Exhibit D-1 (the "Cold Storage Rebate"),

(iii) future tenant or other end user outreach payments, the timing and amount of which shall be determined by the Agency at a future date and which may be payable to tenants or other end users by or through the Agency or the Developer (the "Tenant Outreach Payments" and collectively with the Administrative Expenses and Cold Storage Rebate, the "Net Payments"),

(iv) beginning April, 2015, amounts payable to the City (the "City Repayment") equal to 25% of the amount remaining for distribution (tax increment revenues received by the Agency pursuant to the Project Area Plan after payment of the Net Payments),

(v) beginning April, 2015, amounts payable to Weber Basin Water Conservancy District (the "Weber Repayment") equal to 15% of the amount remaining for distribution (tax increment revenues received by the Agency pursuant to the Project Area Plan after payment of the Net Payments).

The Developer shall be eligible to receive such net tax increment revenues from April, 2015 through April, 2029 in a total amount of not to exceed $5,135,053 (the "Property Tax Rebate") in order to reimburse the Developer for qualified costs associated with the development of the Project Area, as further described in (b) below. The Developer shall also be eligible to receive such net tax increment revenues from April, 2015 through April, 2029 in order to make qualified Tenant Outreach Payments, to the extent and in accordance with the provision of Exhibit F attached hereto. The City and Weber Basin Water Conservancy District ("Weber Basin") have agreed to provide certain improvements within the Project Area, as set forth in Appendix C to Exhibit A, and in return for such improvements, the City and Weber Basin will be paid the City Repayment and Weber Repayment, respectively, described above. If by April 30, 2019, the City has not received a total of $455,000 in City Repayment moneys and/or Weber Basin has not received a total of $173,000 in Weber Repayment moneys, the amount of Property Tax Rebate the Developer receives from that date forward shall be reduced to zero and the percentage of the City Repayment and Weber Repayment shall be increased to 65% and 35%, respectively, of the tax increment revenues received by the Agency after payment of the Net Payments, until such time as the City and Weber Basin have been paid in full the amounts set forth above (either through the receipt of tax increment moneys or through a payment made by the Developer in accordance with Section 4.2 hereof), at which time the amounts payable to the City and Weber Basin shall be reduced to zero, and the Developer shall thereafter receive 100% of the tax increment revenues received by the Agency pursuant to the Project Area Plan after payment of the Net Payments.

(b) The Property Tax Rebate moneys may be used by the Developer to finance the qualified Project improvements set forth in Appendix C to Exhibit A hereto. The Developer shall submit draw requests to the City, in substantially the form of Exhibit F hereto, for Project expenses in accordance with the procedures outlined in Exhibit F. The Developer's approved Project expenses will be reimbursed with Property Tax Rebate moneys as such become available pursuant to the terms of this Agreement.

Section 3.2 Interlocal Agreements. The Agency has entered into an interlocal agreement with Weber Basin, which is attached hereto as Exhibit H (the "Interlocal Agreement"), whereby Weber Basin has agreed to install certain improvements in the Project Area, as further described in the Interlocal Agreement.

Section 3.3 Issuance of Permits/Approval of Site Plan. The Agency will cooperate with the Developer, as requested in obtaining necessary approval of the site plan, zoning approval, and the issuance of building permits, and other planning requirements necessary for the Developer to construct the improvements outlined in this Agreement. The Agency reserves the right to review and approve the conceptual and final plan and drawings for the Project and Project Real Property. The Agency agrees any approval required by the Agency shall not be unreasonably withheld, conditioned or delayed.

Section 3.4 Sole Source of Agency's Funding. The Developer understands and agrees that the only source of monies available to the Agency to pay its obligations hereunder are tax increment monies actually received by the Agency from the Project and Project Real Property based upon the value of the improvements to be constructed by the Developer. Only available tax increment monies from the Project Real Property, less any negative tax increment from the Project Area deducted by the County Assessor's office, will be available to the Agency to meet said obligations.

ARTICLE IV

CONSTRUCTION REQUIREMENTS

Section 4.1 Issuance of Permits. The Developer shall have the sole responsibility of obtaining all necessary permits and approvals to construct the improvements and shall make application for such permits and approvals directly to the City, Agency and other appropriate agencies and departments.

Section 4.2 Construction. The Developer agrees that it shall promptly begin and diligently prosecute to completion the development of the Project subject to reasonable commercial expectations and conditions. The Developer shall undertake certain expenditures, as identified in the Project Area Budget attached hereto as Appendix C of Exhibit A, in order to promote the development of the Project. As part of these expenditures, the Developer shall complete certain infrastructure improvements, as identified by the approved subdivision plat dated August 14, 2012 and in accordance with the terms of the Offsite Improvement Agreement between the City and the Developer (which subdivision plat and Offsite Improvement Agreement are attached hereto as Exhibit I), by August 24, 2013, unless such date is extended by the Agency. Developer acknowledges and agrees that unless the Project is timely constructed and completed and becomes part of Davis County's final assessment tax roll, the available tax increment necessary to pay the Agency obligations will not materialize, and the Agency would be unable to receive and pay its obligations. The Developer and the Agency intend for construction of the Project to proceed in such manner as to produce the ad valorem taxes set forth in the Project Area Budget attached hereto as Appendix C of Exhibit A. The Developer hereby agrees that if by April 30, 2019, the City has not received a total of $455,000 in City Repayment moneys and/or Weber Basin has not received a total of $455,000 in Weber Repayment moneys, the Developer shall immediately pay to the City and Weber Basin, respectively, the difference between such amounts and the amounts the City and Weber Basin have received in City Repayment and Weber Repayment moneys, respectively, to such date. In the event that the Developer does not immediately make such payment, and without releasing the Developer from such obligation, the Agency will also be entitled to the additional remedy of reducing the Property Tax Rebate as described in Section 3.1 herein.

Section 4.3 Access to Site. The completion of the Project and the work of the Developer shall be subject to inspection by representatives of the City as provided under State and local law. The Developer shall permit access to the Site by the City for purposes of inspection, and, to the extent necessary, to carry out the purposes of this and other sections or provisions of this Agreement. Inspections shall be made during reasonable business hours upon three business days notice and shall be made in accordance with standard project safety guidelines.

ARTICLE V

REMEDIES

Section 5.1 Default by Developer. If the Developer defaults or breaches any of its material obligations contained in this Agreement and does not timely cure such default or breach as provided in this Agreement after the expiration of all applicable notice and cure periods, then the Agency may, as its sole remedy hereunder, terminate this Agreement.

Section 5.2 Notice. If any Party to this Agreement fails to perform their respective obligations hereunder or to comply with the terms hereof, the Party believing that a default has occurred shall provide a notice to the other Party (the "Notice of Default"). A Notice of Default shall:

(a) Specify the claimed event of default;

(b) Identify with particularity the provisions of any applicable law, rule, regulation or provision of this Agreement that is claimed to be in default;

(c) Identify why the default is claimed to be material; and

(d) If the Agency chooses, in its discretion, propose a method and time for curing the default which shall be of no less than sixty (60) calendar days duration, except as described in Section 5.4 hereof.

Section 5.3 General Remedies; Agency and Developer. Subject to the other provisions of this Article V, in the event of any default or breach of this Agreement or any of its terms, covenants or conditions by any Party hereto, such Party shall, upon written notice from the other Party(ies) as required by Section 5.2, proceed immediately to cure or remedy such default or breach within sixty (60) calendar days after receipt of notice of such, unless a longer period of time is designated in the Notice of Default or agreed to by the Parties pursuant to Section 5.4. In case such action is not taken, or diligently pursued, or the default or breach shall not be cured or remedied within the time periods provided above, the aggrieved Party may institute such proceedings as may be necessary or desirable, at its option, to cure or remedy such default or breach, including, but not limited to, proceedings to compel specific performance by the Party in default which is not cured within the time limits contained in this Agreement, the non-defaulting Party may, at its option, take such action as allowed by law, in equity and/or provided for in this Agreement. Any delay by a Party in instituting or prosecuting any such actions or proceedings or otherwise asserting its rights under this Article shall not operate as a waiver of such rights.

Section 5.4 Extensions. If any default cannot be cured within sixty (60) calendar days due to environmental conditions (i.e. frozen earth, blizzard, flooding, earthquake, etc.), then such cure shall be extended so long as necessary to compensate for delay caused by environmental conditions. The Agency may in writing extend the time

for the Developer's performance of any term, covenant or condition of this Agreement or permit the curing of any default upon such terms and conditions as may be mutually agreeable to the parties provided, however, that any such extension or permissive curing of any particular default shall not operate to release any of the Developer's obligations nor constitute a waiver of the Agency's rights with respect to any other term, covenant or condition of this Agreement or any other default in, or breach of, this Agreement. Any such extension by the Agency shall be in writing.

Section 5.5 Remedies Cumulative/Non-Waiver. The rights and remedies of the Parties to this Agreement, whether provided by law or by this Agreement, shall be cumulative, and the exercise by any party of any one or more of such remedies shall not preclude the exercise by it, at the same or different times, of any other such remedies for the same default or breach or of any of its remedies for any other default or breach by the other Party, except as otherwise provided in Section 5.1. No waiver made by any Party with respect to the performance, or manner or time thereof, or any obligation of the other Party or any condition to its own obligation under this Agreement shall be considered a waiver of any rights of the Party making the waiver with respect to the particular obligation of the other Party or condition to its own obligation beyond those expressly waived and to the extent thereof, or a waiver in any respect in regard to any other rights of the Party making the waiver or any other obligations of the other Party.

ARTICLE VI

VESTED RIGHTS

Section 6.1 Zoning and Vested Rights.

(a) The Project is currently zoned industrial. To the extent permissible under the laws of Utah and the United States and at equity, the City and Developer intend that this Agreement grant to the Developer all rights to develop the Project in fulfillment of this Agreement without modification or interference by the City except as set forth herein. The Parties intend that the rights granted to Developer under this Agreement are contractual and also those rights that exist under statute, common law and at equity. The parties specifically intend that this Agreement grant to Developer "vested rights" as that term is construed in Utah's common law and pursuant to Utah Code Ann. § 10-9a-509. However, the City shall not hold the Developer harmless against changes in laws beyond the City's control.

(b) Developer covenants not to bring suit to have any of the City's Vested Laws declared to be unlawful, unconstitutional or otherwise unenforceable. If any of the City's Vested Laws are declared to be unlawful, unconstitutional or otherwise unenforceable, then Developer will nonetheless comply with the terms of this Agreement. Developer shall also in that event cooperate with the City in adopting and agreeing to comply with a new enactment by the City that is materially similar to any such stricken provision and that implements the intent of the parties in that regard as manifested by this Agreement.

(c) The Developer shall be subject to the City's Vested Laws as set forth herein. The Developer shall be subject to future laws of the City which may be implemented from time to time (the "City's Future Laws") as follows:

(i) Developer Agreement. City's Future Laws that Developer agrees in writing to the application thereof to the Project.

(ii) State and Federal Compliance. City's Future Laws which are generally applicable to all properties in the City and which are required to comply with State and Federal laws and regulations affecting the Project.

(iii) Codes. City's Future Laws that are updates or amendments to existing building, plumbing, mechanical, electrical, dangerous buildings, drainage, or similar construction or safety related codes, such as the International Building Code, the APWA Specifications, AAHSTO Standards, the Manual of Uniform Traffic Control Devices or similar standards that are generated by a nationally or statewide recognized construction/safety organization, or by the State or Federal governments

and are required to meet legitimate concerns related to public health, safety or welfare.

(iv) Taxes. Taxes, or modifications thereto, so long as such taxes are lawfully imposed and charged uniformly by the City to all properties, applications, persons and entities similarly situated.

(v) Fees. Changes to the amounts of fees for the processing of development applications that are generally applicable to all development within the City (or a portion of the City as specified in the lawfully adopted fee schedule) and which are adopted pursuant to applicable law.

(vi) Compelling, Countervailing Interest. Laws, rules or regulations that the City's land use authority finds, on the record, are necessary to avoid jeopardizing a compelling, countervailing public interest pursuant to Utah Code Ann. § 10-9a-509(1)(a)(i).

(vii) Impact Fees. Fees assessments, exactions or payments of money imposed by the City as a condition on development activities as specified in Utah Code Ann. Sections 11-36a-101, et seq. ("Impact Fees") or modifications thereto that are lawfully adopted, imposed and collected.

(d) Without waiving any rights granted by this Agreement, Developer may at any time, choose to submit a development application for some or all of the Project under the City's Future Laws. Any development application filed for consideration under the City's Future Laws shall be governed by all portions of the City's Future Laws related to the development application at the time of such filing. The election by Developer at any time to submit a development application under the City's Future Laws shall not be construed to prevent Developer from relying for other development applications on the City's Vested Laws.

ARTICLE VII

MISCELLANEOUS PROVISIONS

Section 7.1 Government Records Access and Management Act. This Agreement and all documents referenced in this Agreement or made a part of hereof, including without limitation, all documents, evaluations or assessments provided by the Developer and/or relied upon by the Agency in entering into or performing this Agreement, shall be subject to the provisions of the Utah Government Records Access and Management Act ("GRAMA").

Section 7.2 Party Representatives.

(a) The Agency hereby appoints the City Mayor as the Agency representative to assist in the administrative management of this Agreement and to coordinate performance of obligations by the Developer and the Agency under this Agreement.

(b) The Developer hereby appoints Gary McEntee to act as its representative in connection with its performance of this Agreement unless and until another representative is designated by written notice to the Agency. Said designated representative shall have the responsibility of working with the Agency to coordinate the performance of the Developer and obligations under this Agreement.

Section 7.3 Standard of Performance/Professionalism. The Developer acknowledges the standard of performance and professionalism required in the performance of its obligations under this Agreement. The Developer agrees to perform its obligations under this Agreement with the level of respect and deference to the community and its financial contribution. The Developer further agrees that it will not accept any fee or financial remuneration from any person or entity other than the City or the Agency for its performance under this Agreement.

Section 7.4 Governmental Immunity. The Developer acknowledges that the Agency and the City are bodies Corporate and politic of the State of Utah, subject to the Utah Governmental Immunity Act, Utah Code Ann. Sections 63-30d-101, et. seq. (the "Act"). The Developer further acknowledges and agrees that nothing contained in this Agreement shall be construed in any way, to modify (whether to increase or decrease), the limits of liability set forth in that Act or the basis for liability as established in the Act.

Section 7.5 Indemnity. The Developer agrees to indemnify, hold harmless and defend the Agency and the City, their officers, agents and employees from and against any and all losses, damages, injuries, liabilities, and claims, including claims for personal injury, death, or damage to personal property or profits and liens of workmen and material men (suppliers), however allegedly caused, resulting directly or indirectly from, or arising out of, the construction, development, operation or use of the Project and the

Project Real Property, breach of this Agreement on the part of the Developer, or the negligent acts or omissions by the Developer or their agents, representatives, officers, employees or subcontractors in the performance of this Agreement; provided, there is excluded from this Paragraph, and the Developer shall not be obligated to indemnify, hold harmless or defend the Agency against any losses, damages, injuries, liabilities, and claims arising from the gross negligence or willful misconduct of the Agency, or its officers, agents and employees.

Section 7.6 No Agency. No agent, employee or servant of the Developer, the Agency or the City is or shall be deemed to be an employee, agent or servant of the other Party. None of the benefits provided by any Party or by the Developer to its employees, including but not limited to worker's compensation insurance, health insurance and unemployment insurance, are available to the employees, agents, contractors or servants of the other Party or the Developer. The Parties shall each be solely and entirely responsible for their respective acts and for the acts of their respective agents, employees, contractors and servants throughout the term of this Agreement. The Parties shall each make all commercially reasonable efforts to inform all persons and entities with whom they are involved in connection with this Agreement to be aware that the Developer is an independent contractor.

Section 7.7 Ethical Standards. The Developer represents that they have not: (a) provided an illegal gift or payoff to any officer or employee of the City or the Agency, or former officer or employee of the City or the Agency, or to any relative or business entity of a officer or employee of the City or the Agency, or relative or business entity of a former officer or employee of the City or the Agency; (b) retained any person to solicit or secure this contract upon an agreement or understanding for a commission, percentage, brokerage or contingent fee, other than bona fide employees of bona fide commercial agencies established for the purpose of securing business; (c) breached any of the ethical standards set forth in State statutes §§10-3-1301 et seq. and 67-16-3 et seq. or (d) knowingly influenced, and hereby promises that it will not knowingly influence, any officer or employee of the City or the Agency or former officer or employee of the City or the Agency to breach any of the ethical standards set forth in State statute or the City ordinances.

Section 7.8 No Officer or Employee Interest. It is understood and agreed that no officer or employee of the Agency or the City has or shall have any pecuniary interest, direct or indirect, in this Agreement or the proceeds resulting from the performance of this Agreement. No officer, manager, employee or member of the Developer or any member of any of such persons' families shall serve on any City board or committee or hold any such position which either by rule, practice, or action nominates, recommends, or supervises the Developer's operations, or authorizes funding or payments to the Developer.

Section 7.9 Public Funds and Public Monies.

(a) For purposes hereof, "Public Funds" and "Public Monies" mean monies, funds, and accounts, regardless of the source from which they are

derived, that are owned, held, or administered by the state or any of its boards, commissions, institutions, departments, divisions, agencies, bureaus, laboratories, or other similar instrumentalities, or any county, city, school district, political subdivision, or other public body. The terms also include monies, funds or accounts that have been transferred by any of the aforementioned public entities to a private contract provider for public programs or services. The Developer understands, acknowledges and agrees that said funds shall maintain the nature of Public Funds while in the Developer's possession.

(b) Notwithstanding any term or provision of this Agreement to the contrary, the Developer, as a potential recipient of Public Funds and Public Monies pursuant to this Agreement and the other agreements related hereto, expressly understands that it and its officers, managers, members and employees are obligated to receive, keep safe, transfer, disburse and use these Public Funds and Public Monies solely as authorized by law and this Agreement. The Developer understands that its officers, managers, members and employees may be criminally liable under Utah Code Ann. § 76-8-402, for misuse of Public Funds or Public Monies. The Developer expressly understands that the Agency shall monitor any expenditure by the Developer of Public Funds contemplated by this Agreement and shall impose and enforce any and all such requirements in connection therewith as may be required by applicable law. The Developer further expressly understands that the Agency may withhold Public Funds or require repayment of Public Funds from the Developer for contract noncompliance, failure to comply with directives regarding the use of Public Funds, or for misuse of Public Funds or Public Monies.

Section 7.10 Compliance with Laws. Each Party agrees to comply with all federal, state and local laws, rules and regulations in the performance of its duties and obligations under this Agreement. Any violation by any Party of applicable law shall constitute an event of default under this Agreement and such defaulting Party shall be liable for and indemnify, hold harmless and defend the other Party from and against any and all liability arising out of or connected with the violation. The Developer is solely responsible, at its expense and cost, to acquire, maintain and renew during the term of this Agreement, all necessary permits and licenses required for its lawful performance of its duties and obligations under this Agreement. For purposes of this Agreement, the term "applicable law" or any similar term shall not include an ordinance, resolution, regulation, rule or procedure adopted or enacted by the Agency after the satisfaction of the conditions set forth in Article III, above, which would prevent the Agency's performance of its obligations under this Agreement.

Section 7.11 Non-Discrimination. The Developer, and all persons acting on its behalf, agree that they shall comply with all federal, state and City laws, rules and regulations governing discrimination and they shall not discriminate in the engagement or employment of any professional person or any other person qualified to perform the services required under this Agreement.

Section 7.12 Labor Regulations and Requirements. The Developer agrees to comply with all applicable provisions of Title 34 of the Utah Code, and with all applicable federal, state and local labor laws. The Developer shall indemnify and hold the Agency harmless from and against any and all claims for liability arising out of any violation of this Paragraph or the laws referenced by the Developer, its agents or employees.

Section 7.13 Assignment. The Developer shall not assign or transfer its duties of performance nor its rights to compensation under this Agreement, without the prior written approval of the Agency, which shall not be unreasonably withheld, conditioned or delayed. In addition, if the assignment or transfer of the rights under this Agreement is to a person or entity which acquires substantially all of the assets of the Developer, the burden of proof shall be on the Agency to establish that its disapproval is reasonable. If the Agency withholds such approval, it shall specify in reasonable written detail the basis for the disapproval. The Agency reserves the right to assert any claim or defense it may have against the Developer and against any assignee or successor-in-interest of the Developer. Notwithstanding the foregoing, the surviving entity in any merger, consolidation or reorganization in which the Developer is a participant shall constitute a permitted assignment ("Permitted Assignment") and shall not require prior approval of the Agency. The Developer shall provide written notice of a Permitted Assignment promptly after the same occurs.

Section 7.14 Notices. All notices to be given under this Agreement shall be made in writing and shall be deemed given upon personal or hand delivery, by confirmed facsimile transmission (with respect to the Agency only), upon the next business day immediately following the day sent if sent by overnight express carrier, or upon the third business day following the day sent if sent postage prepaid by certified or registered mail, return receipt requested, to the Parties at the following addresses (or to such other address or addresses as shall be specified in any notice given):

AGENCY:	Redevelopment Agency of Syracuse City 1979 West 1900 South Syracuse, Utah 84075 Attention: Mayor Fax: (801) 825-3001
With a Copy to:	Syracuse City, Utah 1979 West 1900 South Syracuse, Utah 84075 Attention: City Attorney Fax: (801) 825-3001
DEVELOPER:	Ninigret Construction Company North, L.C. 1700 S. 4650 W. Salt Lake City, Utah 84104 Attention: Gary McEntee

with a simultaneous copy to: Ninigret Construction Company North
1276 Bayview Circle
Weston, Florida 33326
Attention: Cynthia Anaipakos

Section 7.15 Entire Agreement. The Agency, the City and the Developer acknowledge and agree that this Agreement, and each of the other agreements referred to in this Agreement, constitutes the entire integrated understanding between the Agency, the City and the Developer, and that there are no other terms, conditions, representations or understanding, whether written or oral, concerning the rights and obligations of the Parties to this Agreement, except as set forth in this Agreement. This Agreement may not be enlarged, modified or altered, except in writing, signed by the parties.

Section 7.16 Term. The term of this Agreement (the "Term") shall commence upon the Effective Date and continue until May 1, 2029. Unless otherwise agreed between the Parties, vested interest(s) and right(s) contained in this Agreement expire at the end of the Term, or upon termination of this Agreement. The Parties shall have an option to extend this Development Agreement, by written agreement, for additional consecutive one (1) year terms as long as the terms of this Development Agreement have been substantially complied with, and this Agreement has not been earlier terminated, or its term otherwise modified by written amendment. This Agreement shall automatically terminate upon completion of the Project and payment of all Property Tax Rebate moneys in connection therewith.

Upon termination of this Agreement, for any reason, the obligations of the Parties to each other hereunder shall terminate, other than the obligations of the Developer to pay the City Repayment and Weber Repayment moneys set forth in Section 4.2 hereof, but none of the licenses, building permits, conditional use permits, project approvals, variances or certificates of occupancy granted prior to expiration of the Term or termination of this Agreement shall be rescinded or limited in any manner.

Section 7.17 Governing Law. This Agreement shall constitute a development agreement within the meaning of and entered into pursuant to the terms of Utah Code Ann. 10-9a-102. It is understood and agreed by the Parties hereto that this Agreement shall be governed by the laws of the State of Utah and the Ordinances of the City, both as to interpretation and performance. All actions, including but not limited to court proceedings, administrative proceedings, arbitration and mediation proceedings, shall be commenced, maintained, adjudicated and resolved within the jurisdiction of the State of Utah.

Section 7.18 Obligations Joint/Several. The Developer shall be and remain jointly and severally liable for the performance of the obligations of the Developer under this Agreement.

Section 7.19 Estoppel Certificate. Within ten (10) business days after written request of Developer or its lender the Agency shall provide an estoppel certificate to Developer, a prospective purchaser or an existing prospective lender certifying that this

Agreement is in full force and effect, that no defaults exist (or specifying any defaults which do exist) and providing such other factual information pertaining to this Agreement as Developer, such lender or a prospective purchaser of part or all of the Project may reasonably request. The Developer shall pay any actual, out-of-pocket reasonable attorney's fees incurred by the Agency in connection with the foregoing.

Section 7.20 Miscellaneous. In addition to the foregoing, the parties to this Agreement agree as follows:

(a) No waiver of any of the provisions of this Agreement shall be deemed, or shall constitute, a waiver of any other provision, whether or not similar, nor shall any waiver constitute a continuing waiver. No waiver shall be binding unless executed, in writing, by the party making the waiver.

(b) The recitals and the exhibits attached to this Agreement shall be and hereby are incorporated in and an integral part of this Agreement by this reference.

(c) This Agreement shall be binding upon, and shall inure to the benefit of the parties to it and their respective successors and assigns.

(d) In the event that any provision of this Agreement shall be held invalid and unenforceable, such provision shall be severable from, and such invalidity and unenforceability shall not be construed to have any effect on, the remaining provisions of this Agreement.

(e) The Parties agree to use reasonable diligence to fulfill their respective obligations under this Agreement at all times that this Agreement is in effect.

(f) Nothing in this Agreement is or shall be intended to provide or convey any actionable right or benefit to or upon any person or persons other than the Developer and the Agency. Except as otherwise specifically provided in this Agreement, each party shall bear its own costs and expenses (including legal and consulting fees) in connection with this Agreement and the negotiation of all agreements, including without limitation the Agreement, and preparation of documents contemplated by this Agreement.

(g) All obligations of the Parties set forth in this Agreement which are contemplated to be performed or satisfied after the Closing in accordance herewith shall survive the Closing and the delivery of any instrument of conveyance made in connection therewith.

(h) Except as otherwise provided in this Agreement, whenever a period of time is in this Agreement prescribed for action to be taken by a Party, said Party shall not be liable or responsible for, and there shall be excluded from the computation of any such period of time, any delays due to a Force Majeure

Event; for purposes of this Agreement, "Force Majeure Event" means any act or event, whether foreseen or unforeseen, that meets all three of the following tests:

(i) The act or event prevents a Party, in whole or in part, from:

(A) performing its obligations under this Agreement or another specified agreement; or

(B) satisfying any conditions to the obligations under this Agreement.

(ii) The act or event is beyond the reasonable control of and not primarily the fault of a Party.

(iii) A Party has been unable to avoid or overcome the act or event by the exercise of commercially reasonable due diligence.

(iv) In furtherance of such definition, and not in limitation of such definition, each of the following acts and events is deemed to be a Force Majeure Event: war, flood, lightning, drought, earthquake, fire, volcanic eruption, landslide, hurricane, cyclone, typhoon, tornado, explosion, civil disturbance, act of God or the public enemy, terrorist acts, military action, epidemic, famine or plague, shipwreck, action of a court or public authority, or strike, work-to-rule action, go-slow or similar labor difficulty, and such failure, standing alone, prevents Developer from fulfilling one or more of its obligations under this Agreement. The foregoing list of Force Majeure Events is not exhaustive, and the principle of ejusdem generis is not to be applied in determining whether a particular act or event qualifies as a Force Majeure Event. Notwithstanding the foregoing, a Force Majeure Event shall not mean or include economic hardship, changes in market conditions, insufficiency of revenues or funds, or the financial condition of a Party, or the sale, transfer, liquidation, insolvency, failure, secession, disbandment, dissolution or termination of any person owning any interest in a Party.

IN WITNESS WHEREOF, the Parties have executed this Agreement as of the day and year recited above.

DEVELOPER:

NINIGRET CONSTRUCTION COMPANY NORTH, L.C., a Utah limited liability company

By:_____

Name:_____

Title:_____

STATE OF UTAH)
) ss.
COUNTY OF SALT LAKE)

On _____, 2012, personally appeared before me _____, who being by me duly sworn did say that he is the _____ of NINIGRET CONSTRUCTION COMPANY NORTH, L.C., and that said instrument was signed on behalf of said limited liability company.

_____
NOTARY PUBLIC

AGENCY:

REDEVELOPMENT AGENCY OF
SYRACUSE CITY

By:_____

Name:_____

Title:_____

APPROVED AS TO LEGAL FORM:

By:_____

STATE OF UTAH)
) ss.
COUNTY OF DAVIS)

On _____, 2012, personally appeared before me _____, who being by me duly sworn did say that he is the _____ of the REDEVELOPMENT AGENCY OF SYRACUSE CITY, and that said instrument was signed on behalf of the Redevelopment Agency of Syracuse City, by authority of law.

_____
NOTARY PUBLIC

CITY:

SYRACUSE CITY, UTAH

By:_____

Name:_____

Title:_____

APPROVED AS TO LEGAL FORM:

By:_____

STATE OF UTAH)
) ss.
COUNTY OF DAVIS)

On _____, 2012, personally appeared before me _____, who being by me duly sworn did say that he is the _____ of SYRACUSE CITY, UTAH and that said instrument was signed on behalf of Syracuse City, Utah by authority of law.

LIST OF EXHIBITS

To Agreement for the Development of Land

Exhibit A	Project Area Plan
Exhibit B	Legal Description of Project Real Property
Exhibit C	Depiction of Project Real Property
Exhibit D	Developer Plan
Exhibit E	Payback Estimates
Exhibit F	Reimbursement Summary and Draw Request
Exhibit G	City's Vested Laws
Exhibit H	Interlocal Agreement
Exhibit I	Subdivision Plat and Offsite Improvement Agreement

Exhibit A
Project Area Plan

Syracuse SR 193 Economic Development Project Area Plan and Budget

Prepared By

ZIONS BANK PUBLIC FINANCE

August 21, 2012

TABLE OF CONTENTS

Table of Contents 1
1. Introduction 3
2. Definitions 3
3. Preconditions for Designating an Economic Development Project Area 5
4. Project Area Boundaries [17C-3-103(1)(a)] 5
5. General Statement of Land Uses, Layout of Principal Streets, Population Densities, Building Intensities and How They will be Affected by the Economic Development [17C-3-103(1)(b)] 6
A. Land Uses in the Project Area 6
B. Layout of Principal Streets in the Project Area 6
C. Population Densities in the Project Area 6
D. Building Intensities in the Project Area 6
6. Standards That Will Guide the Economic Development [17C-3-103(1)(c)] 6
A. General Design Objectives 7
B. Specific Design Objectives and Controls 8
1. Building Design Objectives 8
2. Open Space Pedestrian Walks and Interior Drive Design Objectives 8
3. Parking Design Objectives 8
4. Project Improvement Design Objectives 8
C. Techniques to Achieve the Economic Development Plan Objectives 8
1. Acquisition and Clearance 9
2. Implementation of Economic Development Projects 9
D. Approvals 9
7. How the Purposes of the Act Will Be Attained by the Economic Development [17C-3-103(1)(d)] 9
A. Establishment of New Business and Increased Tax Base 9
B. Public Infrastructure Improvements 9
8. The Plan is Consistent with and will Conform to the Community's General Plan [17C-3-103(1)(e)] 10
9. Describe How the Economic Development will Create Additional Jobs [17C-3-103(1)(f)] 10
10. Description of Any Specific Project or Projects That are the Object of the Proposed Economic Development [17C-3-103(1)(g)] 11
11. How Private Developers Will Be Selected and Identification of Current Developers in the Project Area [17C-3-103(1)(h)] 11

A. Selection of Private Developers 11
B. Identification of Developers Who are Currently Involved in the Proposed Economic Development 11
12. Reasons for the Selection of the Project Area [17C-3-103(1)(i)] 11
13. Description of the Physical, Social and Economic Conditions Existing in the Area [17C-3-103(1)(j)] 12
A. Physical Conditions 12
B. Social Conditions 12
C. Economic Conditions 12
14. Tax Incentives Offered to Private Entities for Facilities Located within the Project Area [17C-3-103(1)(k)] 12
15. Analysis of Whether the Adoption of the Project Area Plan is Beneficial under a Benefit Analysis [17C-3-103(1)(l)] 13
A. Evaluation of the Reasonableness of the Costs of Economic Development [17C-3-103(2)(a)(i)] 13
B. Efforts the Agency or Developer Has Made or Will Make to Maximize Private Investment [17C-3-103(2)(a)(ii)] 14
C. Rationale for Use of Tax Increment, Including an Analysis of Whether the Proposed Development Might Reasonably be Expected to Occur in the Foreseeable Future Solely through Private Investment [17C-3-103(2)(a)(iii)] 14
D. Estimate of the Total Amount of Tax Increment That Will Be Expended in Undertaking Economic Development and the Length of Time for Which it Will Be Expended [17C-3-103(2)(a)(iv)] 15
E. Beneficial Influences Upon the Tax Base of the Community [17C-3-103(2)(b)(i)] 15
F. Associated Business and Economic Activity Likely to be Stimulated [17C-3-103(2)(b)(ii)] 16
1. Business and Employee Expenditures 16
2. Construction Expenditures 17
G. Number of Jobs or Employment Anticipated to be Generated or Preserved [17C-3-103(2)(b)(iii)] 17
APPENDIX A: PROJECT AREA MAP 19
APPENDIX B: LEGAL DESCRIPTION 20
APPENDIX C: PROJECT AREA BUDGET 21

1. INTRODUCTION

The Syracuse City Redevelopment Agency (the "Agency"), following thorough consideration of the needs and desires of Syracuse City (the "City") and its residents, regarding need of and capacity for new development, has prepared this Economic Development Project Area Plan (the "Plan") for the Syracuse SR-193 Economic Development Project Area (the "Project Area") described in more detail below. The Study Area covered 246.6 acres, of which it is recommended that 187.66 acres (the easternmost portion of the Study Area) be included in the Project Area. Within the Project Area, it is recommended that, at this time, only the easternmost portion (79.44 acres) be included in the tax increment collection area.

In accordance with the terms of this Plan, the Agency will encourage, promote and provide for the development of a new business park within the Project Area. The Syracuse SR-193 Economic Development Project Area will include nearly two million square feet of building space at buildout, located on 187.66 acres, for an average floor area ratio of 0.25.[1] The Tax Increment Collection Area will include approximately 865,000 square feet of building space at buildout.

It is anticipated that the project will generate significant economic activity in the City through the creation of both temporary construction and permanent employment, the generation of additional property tax revenue, and the creation of new business opportunities. Within the Tax Increment Collection Area, an estimated 350 to 1,100 good-paying jobs will be created at this site. Additional jobs will be created within the rest of the Project Area, depending on the type of development that takes place in the remainder of the Project Area. Construction jobs will also be generated as part of this project, with construction wages approximating $13.8 million over the six-year absorption timeframe estimated for the projects currently identified in the Tax Increment Collection Area.[2]

This Plan will govern the development within the Project Area, including the capture and use of tax increment to promote and incentivize development. The purpose of this Plan clearly sets forth the aims and objectives of this development, its scope, available incentives and the mechanism for funding such incentives, and the value of the Plan to the residents, businesses and property owners of the City.

2. DEFINITIONS

As used in this Economic Development Project Area Plan:

1. The term "Act" shall mean and include the Limited Purpose Local Government Entities – Community Development and Renewal Agencies Act Title 17C, Chapters 1 through 4, Utah Code Annotated , , including such amendments or successor statutes as shall from time to time be enacted.

2. The term "Agency" shall mean the Syracuse City Redevelopment Agency, a separate body corporate and politic.

3. The term "base taxable value" shall mean the base taxable value of the property within the Project Area, as shown upon the assessment roll last equalized, before: the date the taxing entity committee adopts the first project area budget.

4. The term "City" shall mean Syracuse City, Utah.

[1] The floor area ratio is the ratio of total building square feet to total land square feet.
[2] Based on anticipated construction jobs and average construction wages as discussed in detail in this report.

5. The term "community" shall mean the community of Syracuse City, Utah.

6. The term "Developer" shall mean any person or entity undertaking development activities in the Project Area including, initially, Ninigret Construction Company North, L.C. (sometimes also referred to as the "Ninigret Group").

7. The term "economic development" shall mean to promote the creation or retention of public or private jobs within the State through planning, design, development, construction, rehabilitation, business relocation, or any combination of these within a community; and the provision of office, industrial, manufacturing, warehousing, distribution, parking, public, or other facilities, or other improvements that benefit the state or a community.

8. The term "Plan Hearing" means the public hearing on the draft Project Area Plan required under Subsection 17C-3-102 of the Act.

9. The term "planning commission" shall mean the planning commission of the City.

10. The term "Project" means the activities associated with this Project Area Plan.

11. The term "Project Area" or "SR-193 Economic Development Project Area" shall mean the geographic area described in this Project Area Plan or Draft Project Area Plan where the economic development set forth in this Project Area Plan or Draft Project Area Plan takes place or is proposed to take place.

12. The term "Project Area Plan" or "Plan" shall mean the SR-103 Economic Development Area Project Area Plan that was adopted pursuant to the Act to guide and control economic development activities within the project area.

13. The term "Project Area Budget" shall mean a multiyear projection of annual or cumulative revenues and expenses and other fiscal matters pertaining to the project area that includes:
(a) the base taxable value of property in the project area;
(b) the projected tax increment expected to be generated within the project area;
(c) the amount of tax increment expected to be shared with other taxing entities;
(d) the amount of tax increment expected to be used to implement the project area plan, including the estimated amount of tax increment to be used for land acquisition, public improvements, infrastructure improvements, and loans, grants, or other incentives to private and public entities;
(e) the tax increment expected to be used to cover the cost of administering the project area plan;
(f) if the area from which tax increment is to be collected is less than the entire project area:
(i) the tax identification numbers of the parcels from which tax increment will be collected; or
(ii) a legal description of the portion of the project area from which tax increment will be collected;
(g) for an economic development project area, the information required under Subsection 17C-3-201(1)(b).

14. The terms "tax," "taxes," "property tax" or "property taxes" includes privilege tax and each levy on an ad valorem basis on tangible or intangible personal or real property.

15. The term "taxing entity" shall mean each public entity that levies a property tax on property situated within the Project Area.

16. The term "tax increment" shall mean the difference between (i) the amount of property tax revenues generated each tax year by all taxing entities from the area designated in the Project Area Plan as the area from which tax increment is to be collected, using the current assessed value of the property, and (ii) the amount of property tax revenues that would be generated from that same area using the base taxable value of the property. Tax increment does not include taxes levied and collected under Section 59-6-1602 Utah Code Annotated, on or after January 1, 1994.

17. The term "Tax Increment Collection Area" shall mean the area from which tax increment is collected for the timeframe of this Plan.

18. All other terms shall have the same meaning set forth in the Act unless the context clearly indicates otherwise.

3. PRECONDITIONS FOR DESIGNATING AN ECONOMIC DEVELOPMENT PROJECT AREA

a) Pursuant to the provisions of the Act, the Agency Board (the "Board"), on November 15, 2011, adopted a resolution designating an economic development survey area ("Survey Area") and containing a map of the boundaries of the Survey Area; and

b) Pursuant to the provisions of §17C-3-102(2)(a) and (b) of the Act, the City has a planning commission and general plan as required by law; and

c) Pursuant to the provisions of §17C-3-102(1)(b) and (c) of the Act, the Agency made a draft Project Area Plan available to the public at the Agency's offices during normal business hours, provided notice of the plan hearing and held a public hearing on the draft plan on August 14, 2012; and

d) Pursuant to the provisions of §17C-3-102(1)(d) of the Act, the Agency has conducted one or more public hearings for the purpose of informing the public about the proposed Project Area, allowing public comment on the draft Project Area Plan and whether the plan should be revised, approved or rejected. The purpose of the hearing(s) was to inform the public about the Plan, to allow public comment on the draft Plan and to solicit input on whether the Plan should be revised, approved or rejected.

4. PROJECT AREA BOUNDARIES [17C-3-103(1)(a)]

The area identified for study (see map in Appendix A) consists of approximately 246.6 acres. Based on a study of the entire Survey Area, it was determined by the Board that a project area for the 187.66 acres (easternmost portion) is the most viable and beneficial at this point in time for a project area, and that the easternmost portion of the project area (79.44 acres) is most viable for a tax increment collection area. It was determined that the westernmost portion of the study area has significant uncertainty as to the type of development and zoning that will take place in the area. Until these issues are resolved, a project area is best suited for the eastern portion of the study area. The proposed project area of 187.66 acres will be located west of 1000 West, north of 700 South, south of 200 South and east of approximately 1700 West. This area is identified on the map shown in Appendix A. The tax increment collection area will consist of 79.44 acres, located at the easternmost portion of the project area. A legal description is included in Appendix B.

5. GENERAL STATEMENT OF LAND USES, LAYOUT OF PRINCIPAL STREETS, POPULATION DENSITIES, BUILDING INTENSITIES AND HOW THEY WILL BE AFFECTED BY THE ECONOMIC DEVELOPMENT [17C-3-103(1)(b)]

A. LAND USES IN THE PROJECT AREA

The permitted land uses within the Project Area shall be those uses permitted by the officially adopted zoning ordinances of the City, as those ordinances may be amended from time to time. At present, all of the real property in the Project Area is unimproved, is in agricultural use and is partially zoned industrial. With this Plan in place, it is expected that land will be developed as a business park – mainly office, warehousing, commercial and manufacturing which are all permitted uses under the current zoning designations.

B. LAYOUT OF PRINCIPAL STREETS IN THE PROJECT AREA

The Project Area is currently bordered on the north by 200 South Street, on the east by 1000 West Street, on the south by a private unimproved road, and on the west by roughly 1700 West. There are currently no improved interior streets within the Project Area. Appendix A shows the new streets planned as part of this Project Area. In addition, 1000 West Street will be widened as part of this project. It is anticipated that the east-west street extending west from 1000 West Street may initially terminate in a cul-de-sac somewhat east of the power corridor during the first phase of the project. The cul-de-sac would be removed and the street extended to connect to a second new street that would be built in connection with later phases.

C. POPULATION DENSITIES IN THE PROJECT AREA

Currently, no one lives within the Project Area. The Plan does not currently propose any residential development. Existing and proposed residential densities within the Project Area will therefore remain at zero persons per square mile.

D. BUILDING INTENSITIES IN THE PROJECT AREA

Currently there are no buildings within the Project Area. The Plan proposes an estimated 865,000 square feet of office/business park space on 79.44 acres within the Tax Increment Collection Area. This results in a floor area ratio of 0.25, calculated as follows:

$$865{,}000 \div (79.44 \text{ acres} \times 43{,}560^{3}) = 0.25$$

While there are no specific plans for the remainder of the Project Area, it is anticipated that it will develop with similar densities, resulting in a total of approximately two million square feet in the entire Project Area.

6. STANDARDS THAT WILL GUIDE THE ECONOMIC DEVELOPMENT [17C-3-103(1)(c)]

The general standards that will guide the economic development are as follows:

[3] Number of square feet per acre

A. GENERAL DESIGN OBJECTIVES

Development within the Project Area will be held to quality design and construction standards, suitable for a business park and will be subject to: (1) appropriate elements of the City's General Plan; (2) applicable City building codes and ordinances; (3) planning commission review and recommendation; and (4) the City's land use code.

Developers will be allowed flexibility of design in developing land located within the Project Area. The development shall be of a design and shall use materials that are subject to design review and approval by the City pursuant to a development agreement with the Developer specifically addressing design issues.

Coordinated and attractive landscaping shall also be provided as appropriate for the character of the Project Area. Materials and design paving, retaining walls, fences, curbs, benches, and other items shall have an attractive appearance and be easily maintained.,

All development will be based on site plans, development data, and other appropriate submittals and materials clearly describing the development, including land coverage, setbacks, heights, and any other data dictated by the City's land use code, and applicable City practice or procedure.

The general principles guiding development within the Project Area are as follows:

1. Encourage and assist economic development with the creation of a well-planned business park that will attract top-quality companies and job opportunities to the area.

2. Provide for the strengthening of the tax base and economic health of the entire community and the State of Utah.

3. Implement the tax increment financing provisions of the Act which are incorporated herein by reference and made a part of this Plan.

4. Encourage economic use of and new construction upon the real property located within the Project Area.

5. Promote and market the Project Area for economic development that would enhance the economic base of the City through diversification.

6. Provide for compatible relationships among land uses and quality standards for development, such that the area functions as a unified and viable center of economic activity for the City.

7. Remove any impediments to land disposition and development through assembly of land into reasonably sized and shaped parcels served by adequate public utilities, streets and other infrastructure improvements.

8. Achieve an environment that reflects an appropriate level of concern for architectural, landscape and design principles, developed through encouragement, guidance, appropriate controls, and financial and professional assistance to the Developers.

9. Provide for construction of public streets, utilities, curbs and sidewalks, other public rights-of-way, street lights, landscaped areas, parking, water utilities, sewer utilities, storm drainage, recreational trails and other public improvements.

10. Facilitate better traffic circulation and reduce traffic hazards through improved public street access and design.

B. SPECIFIC DESIGN OBJECTIVES AND CONTROLS

In addition to the general City design objectives and standards described above, the developer has adopted specific design guidelines that will govern the development of the Project Area. These guidelines focus on the development of a business park atmosphere that will benefit the community.

1. BUILDING DESIGN OBJECTIVES

All new buildings shall be of design and materials that will be in harmony with adjoining areas and other new development and shall be subject to design review and approval by the City.

The design of buildings shall take advantage of available views and topography and shall provide, where appropriate, separate levels of access.

2. OPEN SPACE PEDESTRIAN WALKS AND INTERIOR DRIVE DESIGN OBJECTIVES

All open spaces, pedestrian walks and interior drives shall be designed as an integral part of an overall site design, properly related to existing and proposed buildings.

Comfortably graded pedestrian walks should be provided in areas of the most intense use, particularly from building entrances to parking areas, and adjacent buildings on the same site.

The location and design of pedestrian walks should afford adequate safety and separation from vehicular traffic.

Materials and design of paving, retaining walls, fences, curbs, and other accouterments, shall be of good appearance and easily maintained.

3. PARKING DESIGN OBJECTIVES

Parking areas shall be designed with regard to orderly arrangement, topography and ease of use and access.

4. PROJECT IMPROVEMENT DESIGN OBJECTIVES

Public Rights-of-Way. All streets and walkways within public rights-of-way will be designed or approved by the City and will be consistent with all design objectives.

Street Lighting and Signs. Lighting standards and signs of pleasant appearance and modern illumination standards shall be provided as necessary as approved by the City.

Grading. The applicable portions of the Project Area will be graded in conformance with the final project design as approved by the City for each specific project in accordance with City Code.

C. TECHNIQUES TO ACHIEVE THE ECONOMIC DEVELOPMENT PLAN OBJECTIVES

Activities contemplated in carrying out the Plan in the Project Area may include the acquisition and development of properties in the Project Area.

1. ACQUISITION AND CLEARANCE

Parcels of real property located in the Project Area may be acquired by the Agency by purchase, but may not be acquired by condemnation unless from an Agency board member or officer with their consent [§17C-1-206 (1) and (2)(b)].

2. IMPLEMENTATION OF ECONOMIC DEVELOPMENT PROJECTS

The Agency shall have the right to approve the design and construction documents of all economic development within the Project Area to ensure that all economic development within the Project Area is consistent with this Plan. The City shall notify the Agency of all requests for: (1) zoning changes; (2) conditional use permits; (3) site plan approval; and (4) building permits within the Project Area, and all proposed amendments thereof. Economic development projects within the Project Area shall be implemented as approved by the Agency and the City.

D. APPROVALS

Development within the Project Area shall be implemented by the Agency in accordance with this Plan, and as approved by the City in accordance with applicable land use and building code provisions. The City shall notify the Agency of all requests for (1) zoning changes; (2) design approval; (3) site plan approval; and (4) building permits within the Project Area.

7. HOW THE PURPOSES OF THE ACT WILL BE ATTAINED BY THE ECONOMIC DEVELOPMENT [17C-3-103(1)(d)]

It is the intent of the Agency, with the assistance and participation of the Developer, to facilitate and promote the development of office, industrial, light manufacturing, commercial and other business park related activities that will result in the creation of jobs in the Project Area. Further, the project will strengthen the tax base of the community, which will also serve to accomplish economic development objectives and create a well-planned business center.

The purposes of the Act will be achieved by the following:

A. ESTABLISHMENT OF NEW BUSINESS AND INCREASED TAX BASE

The proposed Project envisions business park development that will benefit the State and the City through increased job creation, increased property tax base, increased income taxes paid (both corporate and individual) and increased energy usage (and the accompanying municipal energy "franchise" tax). Multiplier (indirect and induced) impacts will result from the initial job creation and expenditures for construction and supplies.

B. PUBLIC INFRASTRUCTURE IMPROVEMENTS

The construction of the public infrastructure improvements as provided by this Plan will support the development contemplated herein and provide for future development in surrounding areas. The associated public infrastructure improvements will make the land within the Project Area more accessible to and from other parts of the City. Thus, the components of the Project provided in this Plan will encourage, promote and provide for economic development within the Project Area and the City generally for years to come.

8. THE PLAN IS CONSISTENT WITH AND WILL CONFORM TO THE COMMUNITY'S GENERAL PLAN [17C-3-103(1)(e)]

This Plan is consistent with the City's General Plan that was updated and approved May 26, 2009. Specifically, the City's mission statement states a desire to "provide quality, affordable services for its citizens, while promoting community pride, fostering economic development and managing growth." This Project Area Plan will help accomplish all of these purposes.

The General Plan (pp. 13-14) also specifically refers to development along 200 South and 1000 West as follows:

> *The corridor along 200 South in Syracuse between 1000 West and the future North Legacy Parkway (approximately Bluff Road) represents an area with the highest future potential for commercial development within the City. In a first phase, UDOT plans to widen (to 100') 200 South between I-15 and 2000 West sometime around 2011. As the time of completion of this roadway project draws near, the land along the south side of 200 South between 1000 West and 2000 West will become increasingly attractive to commercial developers. The City should maintain its current plan for a C-2 Commercial land use along most of this corridor. This land use will allow the greatest flexibility of development. A key focal point for retail locations along this corridor should be the corner of 2000 West and 200 south. UDOT is also planning for the widening of 2000 West from 1700 South all the way to Weber County, thus making this intersection a highly attractive location for future commercial activity.*
>
> *Commercial development is also proposed along the city's shared boundary with Clearfield City along 1000 West between 200 South and 700 South. This location represents yet another commercial opportunity to Syracuse as this area is located adjacent to the Freeport Center. The opportunities in this area are commercial developments that are compatible or would support the large industrial enterprises that are typical of the Freeport Center.*

The development proposed in this Project Area Plan is consistent with what is specified in the General Plan and is compatible with that Plan.

9. DESCRIBE HOW THE ECONOMIC DEVELOPMENT WILL CREATE ADDITIONAL JOBS [17C-3-103(1)(f)]

Located proximate to the North Legacy Parkway, the Project Area is one of the premiere business park sites in Davis County. This means that the site will be attractive to major tenants – tenants that could invest significant amounts in both real and personal property and that would be likely to offer skilled jobs and above average wages. The number of jobs created at the site will vary depending on the type of business park development that takes place. Generally speaking, the average number of square feet per worker in commercial buildings is 766.[4] The ratio in industrial buildings varies widely depending on the type of usage but could be as high as 2,500 square feet per employee. Assuming there will be over 865,000 square feet of building space at buildout in the Tax Increment Collection Area alone, there would be a range of roughly 350 to 1,100 employees (FTE's). The remaining Project Area would include additional employees, the number of which would depend on the type of development that takes place in that area.

[4] Source: http://www.eia.gov/emeu/consumptionbriefs/cbecs/pbawebsite/retailserv/retserv_howmanyempl.htm and http://www.cyburbia.org/forums/showthread.php?25827-Square-feet-per-employee.

10. DESCRIPTION OF ANY SPECIFIC PROJECT OR PROJECTS THAT ARE THE OBJECT OF THE PROPOSED ECONOMIC DEVELOPMENT [17C-3-103(1)(g)]

The Plan specifically proposes over 865,000 square feet of business park related building space located on 79.44 acres in the Tax Increment Collection Area and potentially two million square feet of building space in the Project Area (187.66 acres). . However, there will need to be some flexibility in the type and amount of square footage developed in order for the Developer to respond to changing market conditions in the future. There may also be a minimal amount of support retail located within the Project Area.

11. HOW PRIVATE DEVELOPERS WILL BE SELECTED AND IDENTIFICATION OF CURRENT DEVELOPERS IN THE PROJECT AREA [17C-3-103(1)(h)]

A. SELECTION OF PRIVATE DEVELOPERS

The Agency contemplates that owners of real property within the Project Area will take advantage of the opportunity to develop their property, or sell their property to developers for the development of facilities within the Project Area. In the event that owners do not wish to participate in the economic development in compliance with the Plan, or in a manner acceptable to the Agency, or are unable or unwilling to appropriately participate, the Agency may, consistent with the Act, encourage other owners to acquire property within the Project Area, or to select non-owner developers by private negotiation, public advertisement, bidding or the solicitation of written proposals, or a combination of one or more of the above methods.

B. IDENTIFICATION OF DEVELOPERS WHO ARE CURRENTLY INVOLVED IN THE PROPOSED ECONOMIC DEVELOPMENT

The Ninigret Group currently has the 79.44 acres of property in the Tax Increment Collection Area under contract. Upon approval of this Plan, the Agency and the City intend to enter into a Development Agreement with the Ninigret Group. The Agency and the City will work with the Ninigret Group to implement this Project Area Plan as provided in the Development Agreement.

12. REASONS FOR THE SELECTION OF THE PROJECT AREA [17C-3-103(1)(i)]

The Project Area was selected by the Agency as that area within the City having an immediate opportunity to strengthen the community through a major developer who is willing to invest private capital into a business park that will allow for significant job creation, bring new businesses and services into the community, and provide for public infrastructure which will support the development and provide for future development in surrounding areas.

The Project Area contains a portion of the City that is desirable for business park development because of: (1) its accessible location to the North Legacy Parkway; (2) the opportunity to commence a public-private partnership to develop this area of the City; and (3) the current proposal of the Ninigret Group to construct a large master planned development within the Project Area.

Specific boundaries of the Project Area were arrived at by the Agency after a review of the area by members of the Agency, City staff, economic development consultants, and other technical and legal consultants. Planned treatment of this area is intended to stimulate development to the degree necessary for sound long-term growth in the Project

Area and to encourage the development of real property located within the Project Area. Finally, development of the Project Area as a business center is an important element in the City's General Plan.

13. DESCRIPTION OF THE PHYSICAL, SOCIAL AND ECONOMIC CONDITIONS EXISTING IN THE AREA [17C-3-103(1)(j)]

A. PHYSICAL CONDITIONS

The proposed Project Area consists of approximately 187.66 acres of privately owned land as shown on the Project Area map in Appendix A, located south of 200 South, west of 1000 West, north of 700 South and east of approximately 1700 West that is currently dedicated to agricultural use. The Tax Increment Collection Area consists of approximately 79.44 acres. The site contains a 22-foot drop with steep grades which will contribute to significant site grading challenges and development costs.

B. SOCIAL CONDITIONS

There are currently no buildings and no residents within the Project Area. No unusual social conditions were found to exist. Because of the shifting of land uses from agricultural land to active business park or commercial in the Project Area, consistent with the General Plan of the City, this area will take on a new social character that will enhance existing development in the City. The Project Area Plan will bring workers from the surrounding region to the Project Area for employment purposes. It is anticipated, therefore, that the proposed Project Area will add to the community's economy, quality of life, and reputation.

C. ECONOMIC CONDITIONS

There is currently no development in the Project Area. All of the land is currently publicly owned by a charitable 501(c)(3) organization and is therefore exempt from property taxation. The current taxable value of the area is $0.00; therefore, no property tax revenues are currently generated from this area.

14. TAX INCENTIVES OFFERED TO PRIVATE ENTITIES FOR FACILITIES LOCATED WITHIN THE PROJECT AREA [17C-3-103(1)(k)]

The Agency intends to use 80 percent of the property tax increment generated within the Tax Increment Collection Area over a period of 15 years to pay part of the costs associated with development of the Project Area. The Agency intends to negotiate and enter into one or more inter-local agreements with the Davis County School District (the "School District"), Davis County (the "County"), the City, water districts, sewer district, and possibly other smaller taxing entities to secure receipt of a portion of the property tax increment generated within the Project Area that would otherwise be paid to those taxing entities.

The Project Area Budget (attached as Appendix C) shows anticipated tax increment receipts, and the estimated eligible development costs to be reimbursed. Detailed expenditures are shown in the table below.

DETAILED EXPENDITURES	
Syracuse City	
3 water vaults at $60,000 each	$180,000
Water lines	$125,000
Secondary water - booster pump and line	$150,000

DETAILED EXPENDITURES	
Weber Basin Water Conservancy	
Pipeline portion and portion of meter vault	$173,000
Developer	
Roads Construction	$681,131
Culinary Water	$394,220
Storm Drain	$386,918
Sewer	$207,558
Secondary Water	$145,475
Electrical	$62,178
RMP	$94,973
Landscaping (along roadways)	$672,249
Value of Land Required for Roads & Easements	$565,336
Admin, Engineering , Survey and Testing	$229,974
Bonding	$63,744
City Engineering & Review Fee	$25,497
Soil Imbalance Cut/Fill	$1,065,800
Transmission Line Relocation	$190,000
Rail	$350,000
Tenant Outreach	
Tenant Outreach at 30%	$3,289,891
TOTAL EXPENDITURES (not incl. administrative costs)	$9,052,944

15. ANALYSIS OF WHETHER THE ADOPTION OF THE PROJECT AREA PLAN IS BENEFICIAL UNDER A BENEFIT ANALYSIS [17C-3-103(1)(I)]

The public will realize significant benefits from the development of the Economic Development Project Area as proposed by this Plan. The Agency's long-term objective in developing the Project Area is to create a high quality, business center that will diversify the City's economic and tax base, and offer good-paying employment opportunities. The Agency adopted a resolution for the preparation of this Plan because of the opportunity to "jump start" the proposed business park development.

A. EVALUATION OF THE REASONABLENESS OF THE COSTS OF ECONOMIC DEVELOPMENT [17C-3-103(2)(a)(i)]

The Project Area has higher than normal development costs for several reasons: 1) the lack of any utilities currently serving the Project Area which is an agricultural field; 2) the steep grade and 22-foot drop of the property; and 3) the addition of a rail spur that will attract a wider variety of businesses who can make significant investment in the area and establish a good taxable base. The proposed costs of development for site preparation, railroad, infrastructure, economic incentives, or any assistance with building construction, are nearly $9.1 million. The purpose of the tenant outreach is to attract top-quality businesses through assistance with fees, training, relocation costs, and other activities for businesses that will significantly improve the property tax base and provide higher-than-average paying jobs.

SUMMARY OF EXPENDITURES	
Syracuse City	$455,000
Weber Basin Water	$173,000
Developer Infrastructure	$4,785,053
Rail Spur	$350,000
Tenant Outreach	$3,289,891
TOTAL	$9,052,944

Total costs necessary to facilitate the development of this Project Area, including tenant outreach, are therefore estimated at $9,052,944. This is a cost of $113,960 per acre in the Tax Increment Collection Area (where all of the improvements are currently planned). In comparison, the value per acre in the Tax Increment Collection Area at buildout is estimated to be nearly $892,980.[5] The ratio of value to public investment is roughly 7.8 to 1.0.

The issuance of bonds to the full extent now or hereafter permitted by law is authorized as part of this Plan.

B. EFFORTS THE AGENCY OR DEVELOPER HAS MADE OR WILL MAKE TO MAXIMIZE PRIVATE INVESTMENT [17C-3-103(2)(a)(ii)]

The public investment of approximately $9.1 million represents only 12.8 percent of the estimated private investment of $70.1 million in the Tax Increment Collection Area for land, buildings and personal property (equipment).

C. RATIONALE FOR USE OF TAX INCREMENT, INCLUDING AN ANALYSIS OF WHETHER THE PROPOSED DEVELOPMENT MIGHT REASONABLY BE EXPECTED TO OCCUR IN THE FORESEEABLE FUTURE SOLELY THROUGH PRIVATE INVESTMENT [17C-3-103(2)(a)(iii)]

This development is unlikely to happen solely through private investment for several reasons. First, the addition of a rail spur to the site adds an extra cost of development that cannot be recovered through rents that can be achieved in the area. However, the rail spur will greatly expand opportunities to attract a wider range of end users with good-paying jobs and significant investment in equipment (and therefore taxable value) at the site.

Second, many of the business opportunities that can be pursued for this site will be highly sought after by other communities. Therefore, in order to be on a level playing field with surrounding areas, tax increment must be available to offset incentives provided in other areas. Also, several of the opportunities that the Developer is pursuing are businesses that are also looking at sites located outside of the State of Utah. In order to be eligible for EDTIF funds provided by the State (that will attract these businesses to Utah), the Governor's Office of Economic Development (GOED) requires local areas to come up with local funds to show their commitment and partnership in the Project.

[5] The value at buildout is based on an average value per building square foot as follows: building ($50); and personal property ($32). Total taxable value at buildout in the tax increment collection area is projected to be $70,938,331. The total number of acres in the Tax Increment Collection Area is 79.44. Therefore, the value per acre is $892,980.

Third, this site has higher than normal development costs because of the steep grade and 22-foot elevation change on the site. These costs, if added to tenant costs, would make the site less competitive with other areas. And, there are currently no utilities at this site, which must be extended to this agricultural field.

The rationale for the use of tax increment is twofold: 1) tax increment funds must be available from local sources if the statewide EDTIF funds are to be available for the site; and 2) tax increment funds are necessary to offset the extraordinary costs of development associated with the site.

D. ESTIMATE OF THE TOTAL AMOUNT OF TAX INCREMENT THAT WILL BE EXPENDED IN UNDERTAKING ECONOMIC DEVELOPMENT AND THE LENGTH OF TIME FOR WHICH IT WILL BE EXPENDED [17C-3-103(2)(a)(iv)]

The total amount of tax increment necessary for this project is nearly $9.1 million ($2012). The Project Area Budget suggests a 15-year timeframe in order to account for the variability in development and economic conditions that will occur over the 15-year period.

E. BENEFICIAL INFLUENCES UPON THE TAX BASE OF THE COMMUNITY [17C-3-103(2)(b)(i)]

The City and taxing entities will see an increase in taxable value of an estimated $70,938,331 when the Tax Increment Collection Area is fully built out. If construction begins in 2013 and the Project Area commences in 2014 and runs for a period of 15 years, each of the taxing entities will receive increased taxes over the next 15 years from the increased investment in the area. If the taxing entities receive 20 percent of the increment, with the remaining 80 percent of the increment flowing to the Agency, the taxing entities will receive over $2.7 million more over the 15-year period than they are currently receiving.

TAX BENEFIT TO TAXING ENTITIES
2014-2028

Taxing Entities	Tax Rate	% to Entity/Agency	Total Tax Benefit 2014-2025
Davis County	0.002383	20%	$444,252
Davis County School District	0.008861	20%	$1,651,918
Syracuse City	0.001821	20%	$339,481
Weber Basin Water Conservancy District	0.000217	20%	$40,454
Davis County Mosquito Abatement District	0.000104	20%	$19,388
County Library	0.000392	20%	$73,079
North Davis Sewer District	0.000928	20%	$173,003
TOTAL	0.014706		$2,741,576

At the end of the 15-year period, the taxing entities will receive the entire (100%) tax increment which would amount to an estimated $1 million per year more than what they are currently receiving.

ANNUAL TAX BENEFIT TO TAXING ENTITIES
End of Project Area Plan

Taxing Entities	Tax Rate	% to Entity/Agency	Annual Tax Increment

ANNUAL TAX BENEFIT TO TAXING ENTITIES End of Project Area Plan			
Davis County	0.002383	100%	$169,046
Davis County School District	0.008861	100%	$628,585
Syracuse City	0.001821	100%	$129,179
Weber Basin Water Conservancy District	0.000217	100%	$15,394
Davis County Mosquito Abatement District	0.000104	100%	$7,378
County Library	0.000392	100%	$27,808
North Davis Sewer District	0.000928	100%	$65,831
TOTAL	0.014706		$1,043,219

F. ASSOCIATED BUSINESS AND ECONOMIC ACTIVITY LIKELY TO BE STIMULATED [17C-3-103(2)(b)(ii)]

Other business and economic activity likely to be stimulated includes business, employee and construction expenditures.

1. BUSINESS AND EMPLOYEE EXPENDITURES

Between 350 and 1,100 jobs will be created and located within the Tax Increment Collection Area. If these jobs pay, on average, 120 percent of the average wage in Davis County, this will result in approximately $15 million to $50 million annually in increased wages.[6] The increased buying power will result in increased sales tax revenues to the State, the County and the City and increased economic activity generally. Additional jobs and wages will be created in the remainder of the Project Area.

It is anticipated that the business owners and employees of the Project Area facilities will directly or indirectly purchase local goods and services related to their operations from local or regional suppliers. These purchases will likely increase employment opportunities in the related businesses of office equipment, furniture and furnishings, office supplies, computer equipment, communication, security, transportation and delivery services, maintenance, repair and janitorial services, packaging supplies, office and printing services, transportation and delivery services.

Employees will make many of their purchases near their workplace, assuming that goods and services are available. These will most likely include purchases for: lunchtime eating, gasoline and convenience store, personal services such as dry cleaning and haircuts, and auto repair. In addition, there may be limited purchases for gifts, hobbies, etc., if such goods are available.

The following summarizes the benefits to the community:

- Provide an increase in direct purchases in the community.
- Provide economic diversification within the City and the County.

[6] Source: Workforce Services. http://www.bls.gov/ro7/qcewut.htm. The average weekly wage in Davis County is $704, or $36,308 annually. A job that pays 120 percent of the average wage would reach $43,930 yearly.

- Complement existing businesses and industries located within the City by adding new employees who may live and shop and pay taxes in the City and the region.

- Provide an increase in indirect and induced ("multiplier") impacts for business purchases, as well as purchases by employees and their households.

    - The types of expenditures by employees in the area will likely include convenience shopping for personal and household goods, lunches at area restaurants, convenience purchases and personal services (haircuts, banking, dry cleaning, etc.). The employees will not make all of their convenience or personal services purchases near their workplace, and each employee's purchasing patterns will be different. However, it is reasonable to assume that a percentage of these annual purchases will occur within close proximity to the workplace (assuming the services are available).

2. CONSTRUCTION EXPENDITURES

Economic activity associated with the development will include construction activity. Construction costs for projects within the Tax Increment Collection Area are expected to reach approximately $34.6 million, of which 40 percent ($13.8 million) approximates labor costs, another 40 percent (nearly $14 million) represents materials and supplies and the remaining 20 percent represents overhead and profit. A portion of the labor costs will be re-spent in the community – to the extent that convenience goods and services, such as fast food for lunch, personal services, etc., are available. A large portion of the costs for construction supplies will likely be spent in the community as the County has several large-scale construction suppliers.

G. NUMBER OF JOBS OR EMPLOYMENT ANTICIPATED TO BE GENERATED OR PRESERVED [17C-3-103(2)(b)(iii)]

Business Center Jobs. The number of jobs created within the Tax Increment Collection Area will vary depending on the type of business park development that takes place. Generally speaking, the average number of square feet per worker in commercial buildings is 766.[7] The ratio in industrial buildings varies widely depending on the type of usage, but could be as high as 2,500 square feet per employee. Assuming that there will be roughly 865,000 square feet of building space developed at buildout within the Tax Increment Collection Area, there will be between 350 and 1,100 (FTE's). Additional jobs will be created in the remainder of the Project Area.

Construction Jobs. Construction costs are expected to reach approximately $34.6 million within the Tax Increment Collection Area, of which 40 percent ($13.8 million) approximates labor costs. Assuming an average construction wage of $27,070,[8] results in the creation of approximately 500 one-year job equivalents in the construction industry.

To summarize, the creation of the Project Area and adoption of the Project Area Plan is beneficial to the community for the following reasons:

- Increased tax base that will provide additional tax revenues to the various taxing entities;
- Creation of between 350 and 1,100 full-time jobs in the Tax Increment Collection Area;

[7] Source: http://www.eia.gov/emeu/consumptionbriefs/cbecs/pbawebsite/retailserv/retserv_howmanyempl.htm
[8] http://jobs.utah.gov/jsp/wi/utalmis/oidoreport.do#wage

- Creation of approximately 500 construction jobs (one-year job equivalents) in the Tax Increment Collection Area;
- Increased spending in the local area for construction supplies and for convenience purchases by full-time employees at the business park; and
- Added economic diversification to the community.

APPENDIX A: PROJECT AREA MAP

The entire Study Area is represented on the map below. The westernmost area, shaded in salmon color, is not included in the Project Area. The rest of the map is included in the Project Area. Only the easternmost portion of the map, shaded in blue, represents the Tax Increment Collection Area.

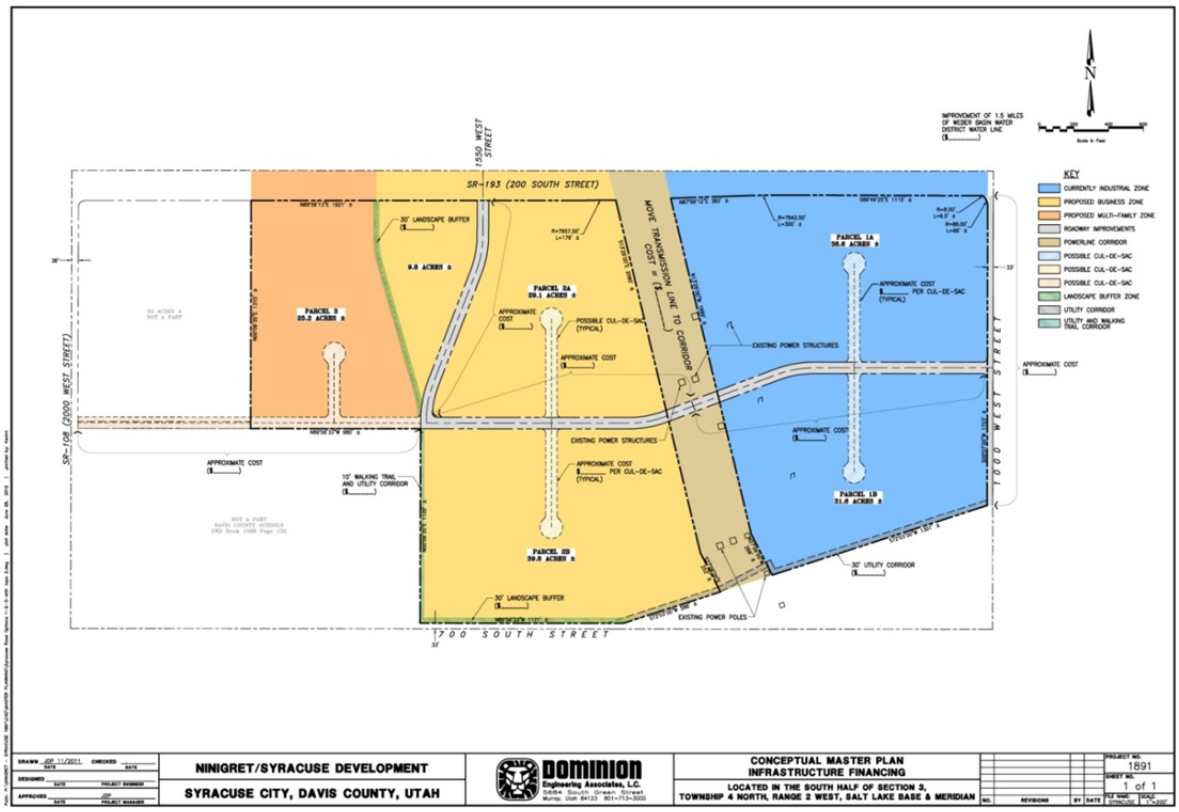

APPENDIX B: LEGAL DESCRIPTION

A parcel of land located in the South Half of Section 3, Township 4 North, Range 2 West, Salt Lake Base and Meridian, Davis County, Utah, described as follows:

BEGINNING at the East Quarter Corner of Section 3, Township 4 North, Range 2 West, Salt Lake Base and Meridian, and thence along the east line of said Section and the easterly line of the Syracuse City boundary South 00°06'46" West 1,921.36 feet to the northeast corner of property described in that certain Correction Quit Claim Deed recorded October 29, 2001 as Entry No. 1699015 in Book 2914 at Page 910 of the Davis County records; thence along the north line of said property and the southerly line of the Syracuse City boundary the following two courses: 1) South 72°12'57" West 2,191.75 feet and 2) South 72°12'01" West 45.02 feet to the north line of the 700 South Street right-of-way; thence South 00°03'43" West 66.00 feet to the south line of said right-of-way; thence along said south line the following two courses: 1) North 89°56'17" West 526.87 feet and 2) North 89°56'56" West 642.32 feet to the southerly extension of the east line of property described in that certain Special Warranty Deed recorded March 9, 1993 as Entry No. 1021678 in Book 1588 at Page 130 of said records; thence along said line and the northerly extension thereof North 00°09'58" East 1,236.48 feet to a point of tangency of a 567.00 feet radius curve to the left; thence Northerly 159.68 feet along said curve through a central angle of 16°08'10" and a long chord of North 07°54'07" West 159.16 feet; thence North 15°58'12" West 760.62 feet to a point of tangency of a 633.00 feet radius curve to the right; thence Northerly 178.27 feet along said curve through a central angle of 16°08'10" and a long chord of North 07°54'07" West 177.68 feet; thence North 00°09'58" East 371.18 feet to the north line of the South Half of said Section 3; thence along said line South 89°56'57" East 3,553.84 feet to the POINT OF BEGINNING. Said parcel contains 8,174,635 square feet or 187.66 acres, more or less.

The parcels to be included in the Tax Increment Collection Area are as follows:

Parcel	Owner	Acres	Taxable Value
120260017	CORP OF THE PRESIDING BISHOP OF THE CHURCH	73.23	$0.00
120260018	UTAH DEPARTMENT OF TRANSPORTATION	6.21	$0.00

APPENDIX C: PROJECT AREA BUDGET

SR 193 Project Area Budget

Zions Bank Public Finance - Municipal Consulting Group

	SR 193 PROJECT AREA BUDGET			TOTAL 15 Years (2014-2028)	0 2013	1 2014	2 2015	3 2016	4 2017	5 2018	6 2019	7 2020	8 2021	9 2022	10 2023	11 2024	12 2025	13 2026	14 2027	15 2028
1	Taxable Value																			
2	Base year taxable value				$0	$0	$0	$0	$0	$0	$0	$0	$0	$0	$0	$0	$0	$0	$0	$0
3	Acres absorbed				35	-	15	-	29	-										
4	Cumulative absorption - acres				35	35	50	50	79	79	79	79	79	79	79	79	79	79	79	79
5	Building square feet				381,150	381,150	544,500	544,500	865,102	865,102	865,102	865,102	865,102	865,102	865,102	865,102	865,102	865,102	865,102	865,102
6	Real property taxable value - one year delay for tax purposes					$19,057,500	$19,057,500	$27,225,000	$27,225,000	$43,255,080	$43,255,080	$43,255,080	$43,255,080	$43,255,080	$43,255,080	$43,255,080	$43,255,080	$43,255,080	$43,255,080	$43,255,080
7	Personal property taxable value - one year delay for tax purposes					$12,196,800	$12,196,800	$17,424,000	$17,424,000	$27,683,251	$27,683,251	$27,683,251	$27,683,251	$27,683,251	$27,683,251	$27,683,251	$27,683,251	$27,683,251	$27,683,251	$27,683,251
8	TOTAL				$0	$31,254,300	$31,254,300	$44,649,000	$44,649,000	$70,938,331	$70,938,331	$70,938,331	$70,938,331	$70,938,331	$70,938,331	$70,938,331	$70,938,331	$70,938,331	$70,938,331	$70,938,331
9																				
10	Incremental Tax Revenues Generated	Tax Rate																		
11	Davis County	0.002383		$2,221,262	$0	$74,479	$74,479	$106,399	$106,399	$169,046	$169,046	$169,046	$169,046	$169,046	$169,046	$169,046	$169,046	$169,046	$169,046	$169,046
12	Davis County School District	0.008861		$8,259,588	$0	$276,944	$276,944	$395,635	$395,635	$628,585	$628,585	$628,585	$628,585	$628,585	$628,585	$628,585	$628,585	$628,585	$628,585	$628,585
13	Syracuse City	0.001821		$1,697,406	$0	$56,914	$56,914	$81,306	$81,306	$129,179	$129,179	$129,179	$129,179	$129,179	$129,179	$129,179	$129,179	$129,179	$129,179	$129,179
14	Weber Basin Water Conservancy District	0.000217		$202,272	$0	$6,782	$6,782	$9,689	$9,689	$15,394	$15,394	$15,394	$15,394	$15,394	$15,394	$15,394	$15,394	$15,394	$15,394	$15,394
15	Davis County Mosquito Abatement District	0.000104		$96,941	$0	$3,250	$3,250	$4,643	$4,643	$7,378	$7,378	$7,378	$7,378	$7,378	$7,378	$7,378	$7,378	$7,378	$7,378	$7,378
16	County Library	0.000392		$365,394	$0	$12,252	$12,252	$17,502	$17,502	$27,808	$27,808	$27,808	$27,808	$27,808	$27,808	$27,808	$27,808	$27,808	$27,808	$27,808
17	North Davis Sewer District	0.000928		$865,015	$0	$29,004	$29,004	$41,434	$41,434	$65,831	$65,831	$65,831	$65,831	$65,831	$65,831	$65,831	$65,831	$65,831	$65,831	$65,831
18	TOTAL	0.014706		$13,707,878	$0	$459,626	$459,626	$656,608	$656,608	$1,043,219	$1,043,219	$1,043,219	$1,043,219	$1,043,219	$1,043,219	$1,043,219	$1,043,219	$1,043,219	$1,043,219	$1,043,219
19																				
20					0	1	2	3	4	5	6	7	8	9	10	11	12	13	14	15
21	AGENCY BUDGET			TOTAL	2013	2014	2015	2016	2017	2018	2019	2020	2021	2022	2023	2024	2025	2026	2027	2028
22	Base year taxable value				$0	$0	$0	$0	$0	$0	$0	$0	$0	$0	$0	$0	$0	$0	$0	$0
23	Real property incremental value				$0	$19,057,500	$19,057,500	$27,225,000	$27,225,000	$43,255,080	$43,255,080	$43,255,080	$43,255,080	$43,255,080	$43,255,080	$43,255,080	$43,255,080	$43,255,080	$43,255,080	$43,255,080
24	Personal property incremental value				$0	$12,196,800	$12,196,800	$17,424,000	$17,424,000	$27,683,251	$27,683,251	$27,683,251	$27,683,251	$27,683,251	$27,683,251	$27,683,251	$27,683,251	$27,683,251	$27,683,251	$27,683,251
25	Incremental Value				$0	$31,254,300	$31,254,300	$44,649,000	$44,649,000	$70,938,331	$70,938,331	$70,938,331	$70,938,331	$70,938,331	$70,938,331	$70,938,331	$70,938,331	$70,938,331	$70,938,331	$70,938,331
26																				
27	Tax Revenue Distribution																			
28	*Base Year Taxable Value - to Entities*																			
29	Davis County	0.002383		$0	$0	$0	$0	$0	$0	$0	$0	$0	$0	$0	$0	$0	$0	$0	$0	$0
30	Davis County School District	0.008861		$0	$0	$0	$0	$0	$0	$0	$0	$0	$0	$0	$0	$0	$0	$0	$0	$0
31	Syracuse City	0.001821		$0	$0	$0	$0	$0	$0	$0	$0	$0	$0	$0	$0	$0	$0	$0	$0	$0
32	Weber Basin Water Conservancy District	0.000217		$0	$0	$0	$0	$0	$0	$0	$0	$0	$0	$0	$0	$0	$0	$0	$0	$0
33	Davis County Mosquito Abatement District	0.000104		$0	$0	$0	$0	$0	$0	$0	$0	$0	$0	$0	$0	$0	$0	$0	$0	$0
34	County Library	0.000392		$0	$0	$0	$0	$0	$0	$0	$0	$0	$0	$0	$0	$0	$0	$0	$0	$0
35	North Davis Sewer District	0.000928		$0	$0	$0	$0	$0	$0	$0	$0	$0	$0	$0	$0	$0	$0	$0	$0	$0
36	TOTAL	0.014706		$0	$0	$0	$0	$0	$0	$0	$0	$0	$0	$0	$0	$0	$0	$0	$0	$0
37																				
38	*Incremental Value - to Entities*	Tax Rate	% to Entity/Agency																	
39	Davis County	0.002383	20%	$444,252	$0	$14,896	$14,896	$21,280	$21,280	$33,809	$33,809	$33,809	$33,809	$33,809	$33,809	$33,809	$33,809	$33,809	$33,809	$33,809
40	Davis County School District	0.008861	20%	$1,651,918	$0	$55,389	$55,389	$79,127	$79,127	$125,717	$125,717	$125,717	$125,717	$125,717	$125,717	$125,717	$125,717	$125,717	$125,717	$125,717
41	Syracuse City	0.001821	20%	$339,481	$0	$11,383	$11,383	$16,261	$16,261	$25,836	$25,836	$25,836	$25,836	$25,836	$25,836	$25,836	$25,836	$25,836	$25,836	$25,836
42	Weber Basin Water Conservancy District	0.000217	20%	$40,454	$0	$1,356	$1,356	$1,938	$1,938	$3,079	$3,079	$3,079	$3,079	$3,079	$3,079	$3,079	$3,079	$3,079	$3,079	$3,079
43	Davis County Mosquito Abatement District	0.000104	20%	$19,388	$0	$650	$650	$929	$929	$1,476	$1,476	$1,476	$1,476	$1,476	$1,476	$1,476	$1,476	$1,476	$1,476	$1,476
44	County Library	0.000392	20%	$73,079	$0	$2,450	$2,450	$3,500	$3,500	$5,562	$5,562	$5,562	$5,562	$5,562	$5,562	$5,562	$5,562	$5,562	$5,562	$5,562
45	North Davis Sewer District	0.000928	20%	$173,003	$0	$5,801	$5,801	$8,287	$8,287	$13,166	$13,166	$13,166	$13,166	$13,166	$13,166	$13,166	$13,166	$13,166	$13,166	$13,166
46	TOTAL	0.014706		$2,741,576	$0	$91,925	$91,925	$131,322	$131,322	$208,644	$208,644	$208,644	$208,644	$208,644	$208,644	$208,644	$208,644	$208,644	$208,644	$208,644
47																				
48	*Incremental Value - to Agency*																			
49	Davis County	0.002383	80%	$1,777,009	$0	$59,583	$59,583	$85,119	$85,119	$135,237	$135,237	$135,237	$135,237	$135,237	$135,237	$135,237	$135,237	$135,237	$135,237	$135,237
50	Davis County School District	0.008861	80%	$6,607,671	$0	$221,555	$221,555	$316,508	$316,508	$502,868	$502,868	$502,868	$502,868	$502,868	$502,868	$502,868	$502,868	$502,868	$502,868	$502,868
51	Syracuse City	0.001821	80%	$1,357,924	$0	$45,531	$45,531	$65,045	$65,045	$103,343	$103,343	$103,343	$103,343	$103,343	$103,343	$103,343	$103,343	$103,343	$103,343	$103,343
52	Weber Basin Water Conservancy District	0.000217	80%	$161,817	$0	$5,426	$5,426	$7,751	$7,751	$12,315	$12,315	$12,315	$12,315	$12,315	$12,315	$12,315	$12,315	$12,315	$12,315	$12,315
53	Davis County Mosquito Abatement District	0.000104	80%	$77,553	$0	$2,600	$2,600	$3,715	$3,715	$5,902	$5,902	$5,902	$5,902	$5,902	$5,902	$5,902	$5,902	$5,902	$5,902	$5,902
54	County Library	0.000392	80%	$292,315	$0	$9,801	$9,801	$14,002	$14,002	$22,246	$22,246	$22,246	$22,246	$22,246	$22,246	$22,246	$22,246	$22,246	$22,246	$22,246
55	North Davis Sewer District	0.000928	80%	$692,012	$0	$23,203	$23,203	$33,147	$33,147	$52,665	$52,665	$52,665	$52,665	$52,665	$52,665	$52,665	$52,665	$52,665	$52,665	$52,665
56	TOTAL	0.014706		$10,966,302	$0	$367,701	$367,701	$525,287	$525,287	$834,575	$834,575	$834,575	$834,575	$834,575	$834,575	$834,575	$834,575	$834,575	$834,575	$834,575
57																				
58	Expenses																			
59	*% Administrative Expense*					*20.0%*	*10.0%*	*6.0%*	*6.0%*	*4.0%*	*4.0%*	*4.0%*	*4.0%*	*4.0%*	*4.0%*	*4.0%*	*4.0%*	*4.0%*	*4.0%*	*4.0%*
60	Administration	4.9%		$540,558	$0	$73,540	$36,770	$31,517	$31,517	$33,383	$33,383	$33,383	$33,383	$33,383	$33,383	$33,383	$33,383	$33,383	$33,383	$33,383
61	Remaining Increment for Expenses			$10,425,745	$0	$294,160	$330,931	$493,769	$493,769	$801,192	$801,192	$801,192	$801,192	$801,192	$801,192	$801,192	$801,192	$801,192	$801,192	$801,192

SR 193 Project Area Budget

Zions Bank Public Finance - Municipal Consulting Group

Detailed Expenditures:	
Syracuse City	
3 water vaults at $60,000 each	$180,000
Water lines	$125,000
Secondary water - booster pump and line	$150,000
Weber Basin Water Conservancy	
Pipeline portion and portion of meter vault	$173,000
Developer	
Roads Construction	$681,131
Culinary Water	$394,220
Storm Drain	$386,918
Sewer	$207,558
Secondary Water	$145,475
Electrical	$62,178
RMP	$94,973
Landscaping (along roadways)	$672,249
Value of Land Required for Roads & Easements	$565,336
Admin, Engineering , Survey and Testing	$229,974
Bonding	$63,744
City Engineering & Review Fee	$25,497
Soil Imbalance Cut/Fill	$1,065,800
Transmission Line Relocation	$190,000
Rail	$350,000
Tenant Outreach	
Tenant Outreach at 30%	$3,289,891
TOTAL EXPENDITURES (not incl. administrative costs)	$9,052,944

Exhibit B
Legal Description of Project Real Property

Exhibit C
Depiction of Project Real Property

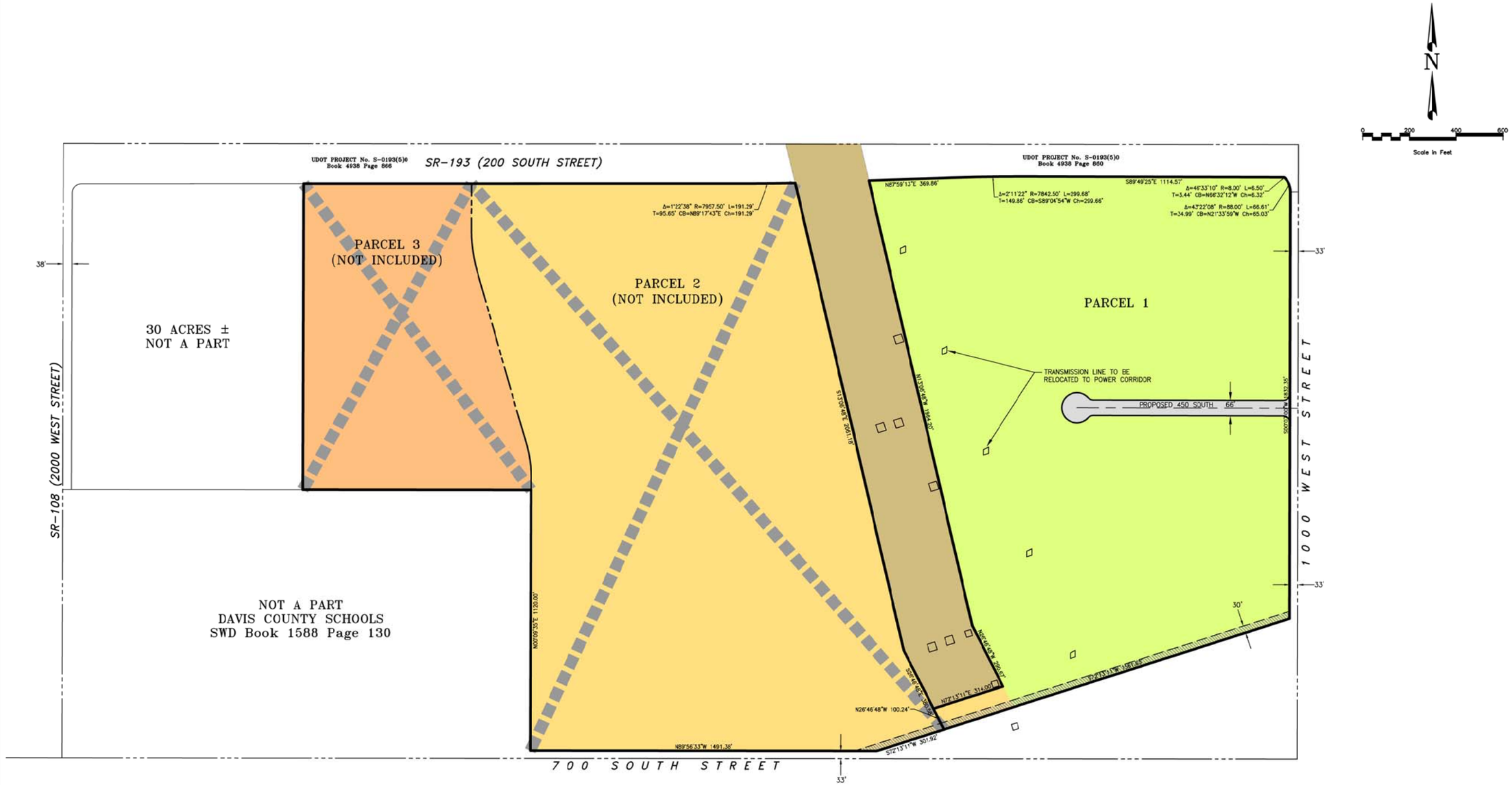

DRAWN DLP 9/2012 DATE	CHECKED DATE	NINGRET CONSTRUCTION COMPANY NORTH	EXHIBIT D-1
DESIGNED DATE	PROJECT ENGINEER	SYRACUSE CITY, DAVIS COUNTY, UTAH	LOCATED IN THE SOUTH HALF OF SECTION 3, TOWNSHIP 4 NORTH, RANGE 2 WEST, SALT LAKE BASE & MERIDIAN
APPROVED CAB DATE	PROJECT MANAGER		

DOMINION Engineering Associates, L.C.
5684 South Green Street
Murray, Utah 84123 801-713-3000

NO.	REVISIONS	BY	DATE

PROJECT NO. 1891
SHEET NO. D-1
FILE NAME: Parcel1 Ex1
SCALE: 1"=200'

Path: P:\NINGRET - SYRACUSE 1891\CAD\MASTER PLANNING\Parcel 1 Ex1.dwg | plot date: October 03, 2012 | plotted by: darrisp

Exhibit D

Developer Plan

EXHIBIT D - DEVELOPER PLAN

October 2012

The Developer intends to own and develop portions of the Subject Property and/or to convey portions of the Subject Property to other persons or entities for development of quality industrial, commercial, office, distribution, warehouse, flex, research and development, and/or retail purposes, and such other commercial purposes that are allowed by the City's Vested Laws and protective covenants filed on the Subject Property. In using any building or building site, the owner or occupant shall be obligated to comply with all present and future safety, health, environmental or other laws, ordinances, orders, rules, regulations and requirements of all federal, state, county and municipal governments, departments, commissions, boards and officers, and all orders, rules and regulations of the National Board of Fire Underwriters or any other body exercising similar functions that may be applicable to the particular building and building site.

The overall site development is generally as depicted on Exhibit D- 1 hereto, subject to such changes as the Developer may reasonably determine, and the Subject Property shall consist only of the site depicted on Exhibit D-2 hereto, and not any other site. An example of a building layout for the Subject Property is depicted on Exhibit D-3 hereto, subject to such changes to the lot layouts, building sizes and configurations as the Developer may determine to meet market conditions. The creation of 450 South road to the *cul de sac*, plus the widening of the western portion of 1000 West, along with attendant sewer, water, etc. requirements by Syracuse City and Clearfield City shall be constructed by the Developer as an integral part of this Developer Plan.

The Project will include landscaping consistent with a high quality business park. This shall include a berm over most of the road boundaries, and rows of trees that reflect a boulevard feeling within the park. Examples of this landscaping schematic are depicted in Exhibit D-4 hereto.

The Project may include any number of different types of buildings, but in each case of a high quality consistent with the types of properties set forth in the first paragraph above. Examples of different types of buildings that may be constructed are depicted in Exhibit D-5 hereto.

Subject to the application of the City's Vested Laws and recorded protective covenants, and notwithstanding the foregoing, the Developer in its reasonable discretion may make such changes to the Developer Plan as it determines is necessary or appropriate to enhance or improve the overall qualitative elements of the Project. The Developer shall in all cases comply with the City's Vested Laws. To the extent that this Developer Plan might contradict the City's Vested Laws, the City's Vested Laws govern.

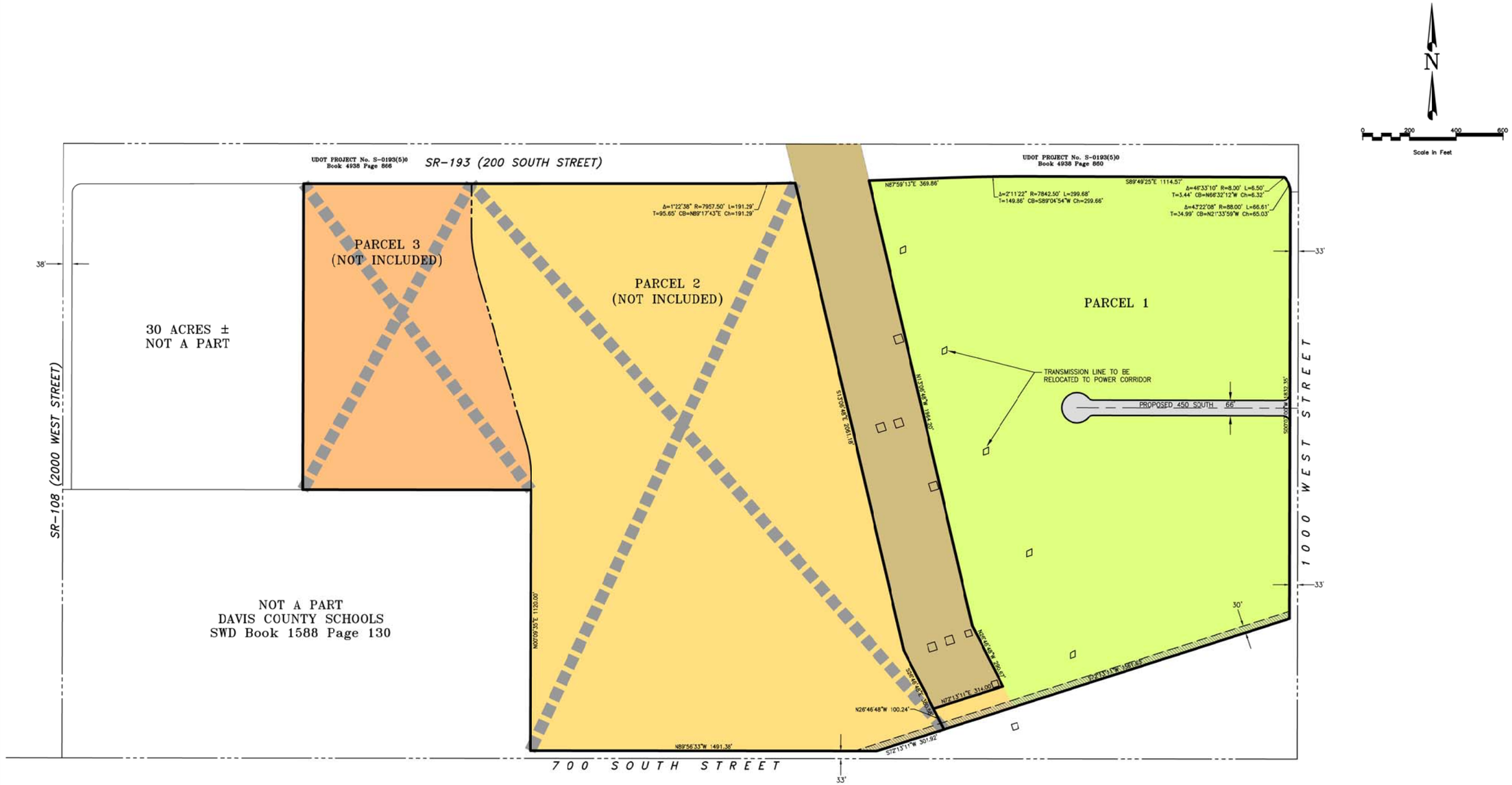

DRAWN DLP 9/2012 DATE	CHECKED DATE	NINGRET CONSTRUCTION COMPANY NORTH	EXHIBIT D-1
DESIGNED DATE	PROJECT ENGINEER	SYRACUSE CITY, DAVIS COUNTY, UTAH	LOCATED IN THE SOUTH HALF OF SECTION 3, TOWNSHIP 4 NORTH, RANGE 2 WEST, SALT LAKE BASE & MERIDIAN
APPROVED CAB DATE	PROJECT MANAGER		

DOMINION Engineering Associates, L.C.
5684 South Green Street
Murray, Utah 84123 801-713-3000

NO.	REVISIONS	BY	DATE

PROJECT NO. 1891
SHEET NO. D-1
FILE NAME: Parcel1 Ex1
SCALE: 1"=200'

Path: P:\NINGRET - SYRACUSE 1891\CAD\MASTER PLANNING\Parcel 1 Ex1.dwg | plot date: October 03, 2012 | plotted by: darrisp

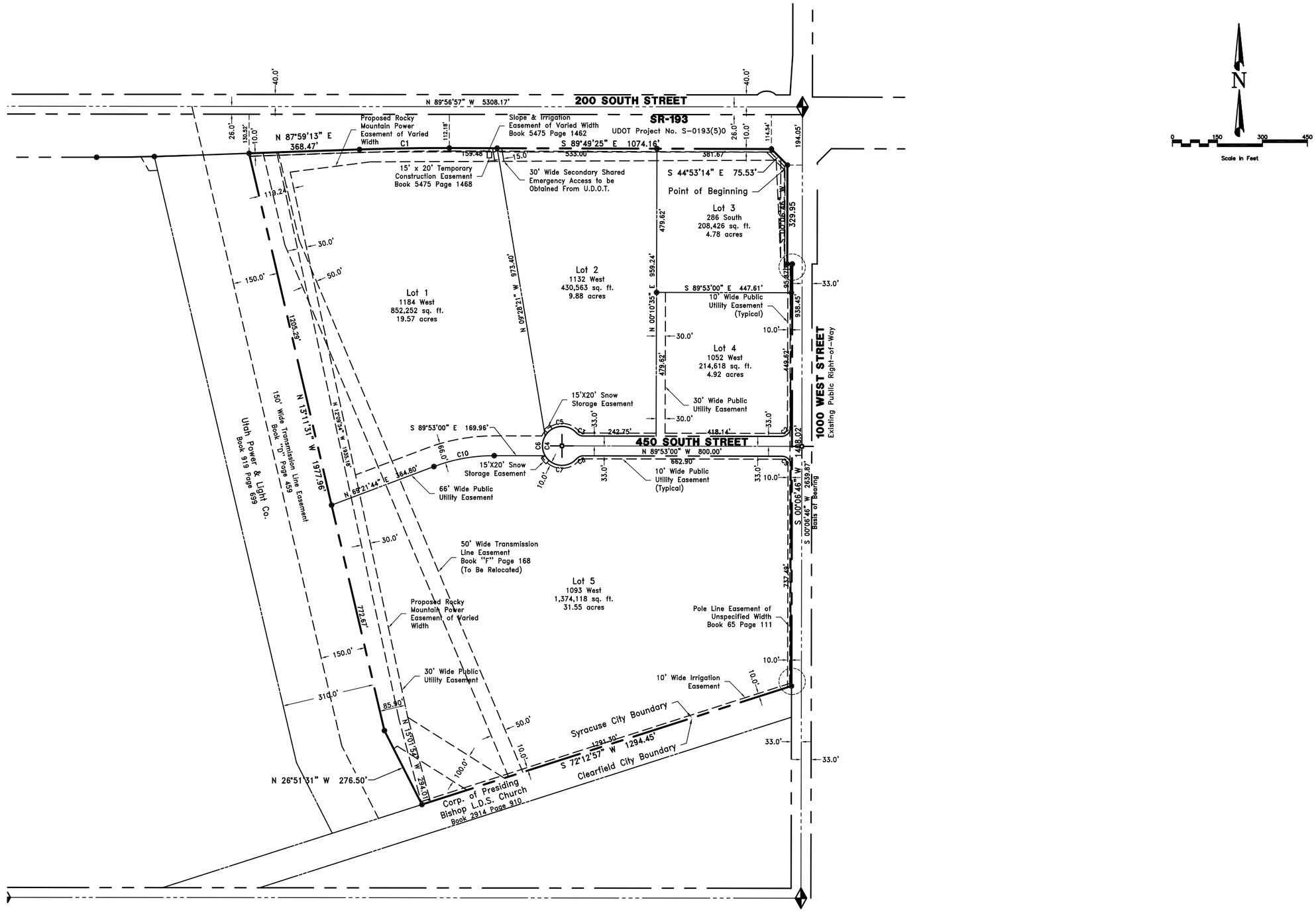

DRAWN DLP 9/2012 DATE	CHECKED DATE	NINGRET CONSTRUCTION COMPANY NORTH	DOMINION Engineering Associates, L.C. 5684 South Green Street Murray, Utah 84123 801-713-3000
DESIGNED DATE	PROJECT ENGINEER	SYRACUSE CITY, DAVIS COUNTY, UTAH	
APPROVED CAB DATE	PROJECT MANAGER		

EXHIBIT D-2

LOCATED IN THE SOUTH HALF OF SECTION 3, TOWNSHIP 4 NORTH, RANGE 2 WEST, SALT LAKE BASE & MERIDIAN

NO.	REVISIONS	BY	DATE

PROJECT NO. 1891
SHEET NO. D-2
FILE NAME: Parcel1 Ex2
SCALE: 1"=150'

Path: P:\NINGRET - SYRACUSE 1891\CAD\MASTER PLANNING\Parcel 1 Ex2.dwg | plot date: October 03, 2012 | plotted by: darrinp

Path: P:\NINGRET - SYRACUSE 1891\CAD\MASTER PLANNING\Parcel 1 Ex3.dwg | plot date: October 03, 2012 | plotted by: darrinp

DRAWN DLP 9/2012 DATE	CHECKED DATE	NINGRET CONSTRUCTION COMPANY NORTH	DOMINION Engineering Associates, L.C. 5684 South Green Street Murray, Utah 84123 801-713-3000
DESIGNED DATE	PROJECT ENGINEER	SYRACUSE CITY, DAVIS COUNTY, UTAH	
APPROVED DATE	CAB PROJECT MANAGER		

EXHIBIT D-3

LOCATED IN THE SOUTH HALF OF SECTION 3, TOWNSHIP 4 NORTH, RANGE 2 WEST, SALT LAKE BASE & MERIDIAN

NO.	REVISIONS	BY	DATE

PROJECT NO. 1891

SHEET NO. D-3

FILE NAME: Parcel 1 Ex3 | SCALE: 1"=150'

EXHIBIT D-4
LANDSCAPING

EXHIBIT D-5
BUILDINGS

Exhibit E

Payback Estimates

SR 193 Project Area Budget

Zions Bank Public Finance - Municipal Consulting Group

	SR 193 PROJECT AREA BUDGET			TOTAL 15 Years (2014-2028)	0 2013	1 2014	2 2015	3 2016	4 2017	5 2018	6 2019	7 2020	8 2021	9 2022	10 2023	11 2024	12 2025	13 2026	14 2027	15 2028
1	Taxable Value																			
2	Base year taxable value				$0	$0	$0	$0	$0	$0	$0	$0	$0	$0	$0	$0	$0	$0	$0	$0
3	Acres absorbed				35	-	15	-	29	-										
4	Cumulative absorption - acres				35	35	50	50	79	79	79	79	79	79	79	79	79	79	79	79
5	Building square feet				381,150	381,150	544,500	544,500	865,102	865,102	865,102	865,102	865,102	865,102	865,102	865,102	865,102	865,102	865,102	865,102
6	Real property taxable value - one year delay for tax purposes					$19,057,500	$19,057,500	$27,225,000	$27,225,000	$43,255,080	$43,255,080	$43,255,080	$43,255,080	$43,255,080	$43,255,080	$43,255,080	$43,255,080	$43,255,080	$43,255,080	$43,255,080
7	Personal property taxable value - one year delay for tax purposes					$12,196,800	$12,196,800	$17,424,000	$17,424,000	$27,683,251	$27,683,251	$27,683,251	$27,683,251	$27,683,251	$27,683,251	$27,683,251	$27,683,251	$27,683,251	$27,683,251	$27,683,251
8	TOTAL				$0	$31,254,300	$31,254,300	$44,649,000	$44,649,000	$70,938,331	$70,938,331	$70,938,331	$70,938,331	$70,938,331	$70,938,331	$70,938,331	$70,938,331	$70,938,331	$70,938,331	$70,938,331
9																				
10	Incremental Tax Revenues Generated	Tax Rate																		
11	Davis County	0.002383		$2,221,262	$0	$74,479	$74,479	$106,399	$106,399	$169,046	$169,046	$169,046	$169,046	$169,046	$169,046	$169,046	$169,046	$169,046	$169,046	$169,046
12	Davis County School District	0.008861		$8,259,588	$0	$276,944	$276,944	$395,635	$395,635	$628,585	$628,585	$628,585	$628,585	$628,585	$628,585	$628,585	$628,585	$628,585	$628,585	$628,585
13	Syracuse City	0.001821		$1,697,406	$0	$56,914	$56,914	$81,306	$81,306	$129,179	$129,179	$129,179	$129,179	$129,179	$129,179	$129,179	$129,179	$129,179	$129,179	$129,179
14	Weber Basin Water Conservancy District	0.000217		$202,272	$0	$6,782	$6,782	$9,689	$9,689	$15,394	$15,394	$15,394	$15,394	$15,394	$15,394	$15,394	$15,394	$15,394	$15,394	$15,394
15	Davis County Mosquito Abatement District	0.000104		$96,941	$0	$3,250	$3,250	$4,643	$4,643	$7,378	$7,378	$7,378	$7,378	$7,378	$7,378	$7,378	$7,378	$7,378	$7,378	$7,378
16	County Library	0.000392		$365,394	$0	$12,252	$12,252	$17,502	$17,502	$27,808	$27,808	$27,808	$27,808	$27,808	$27,808	$27,808	$27,808	$27,808	$27,808	$27,808
17	North Davis Sewer District	0.000928		$865,015	$0	$29,004	$29,004	$41,434	$41,434	$65,831	$65,831	$65,831	$65,831	$65,831	$65,831	$65,831	$65,831	$65,831	$65,831	$65,831
18	TOTAL	0.014706		$13,707,878	$0	$459,626	$459,626	$656,608	$656,608	$1,043,219	$1,043,219	$1,043,219	$1,043,219	$1,043,219	$1,043,219	$1,043,219	$1,043,219	$1,043,219	$1,043,219	$1,043,219
19																				
20					0	1	2	3	4	5	6	7	8	9	10	11	12	13	14	15
21	AGENCY BUDGET			TOTAL	2013	2014	2015	2016	2017	2018	2019	2020	2021	2022	2023	2024	2025	2026	2027	2028
22	Base year taxable value				$0	$0	$0	$0	$0	$0	$0	$0	$0	$0	$0	$0	$0	$0	$0	$0
23	Real property incremental value				$0	$19,057,500	$19,057,500	$27,225,000	$27,225,000	$43,255,080	$43,255,080	$43,255,080	$43,255,080	$43,255,080	$43,255,080	$43,255,080	$43,255,080	$43,255,080	$43,255,080	$43,255,080
24	Personal property incremental value				$0	$12,196,800	$12,196,800	$17,424,000	$17,424,000	$27,683,251	$27,683,251	$27,683,251	$27,683,251	$27,683,251	$27,683,251	$27,683,251	$27,683,251	$27,683,251	$27,683,251	$27,683,251
25	Incremental Value				$0	$31,254,300	$31,254,300	$44,649,000	$44,649,000	$70,938,331	$70,938,331	$70,938,331	$70,938,331	$70,938,331	$70,938,331	$70,938,331	$70,938,331	$70,938,331	$70,938,331	$70,938,331
26																				
27	Tax Revenue Distribution																			
28	*Base Year Taxable Value - to Entities*																			
29	Davis County	0.002383		$0	$0	$0	$0	$0	$0	$0	$0	$0	$0	$0	$0	$0	$0	$0	$0	$0
30	Davis County School District	0.008861		$0	$0	$0	$0	$0	$0	$0	$0	$0	$0	$0	$0	$0	$0	$0	$0	$0
31	Syracuse City	0.001821		$0	$0	$0	$0	$0	$0	$0	$0	$0	$0	$0	$0	$0	$0	$0	$0	$0
32	Weber Basin Water Conservancy District	0.000217		$0	$0	$0	$0	$0	$0	$0	$0	$0	$0	$0	$0	$0	$0	$0	$0	$0
33	Davis County Mosquito Abatement District	0.000104		$0	$0	$0	$0	$0	$0	$0	$0	$0	$0	$0	$0	$0	$0	$0	$0	$0
34	County Library	0.000392		$0	$0	$0	$0	$0	$0	$0	$0	$0	$0	$0	$0	$0	$0	$0	$0	$0
35	North Davis Sewer District	0.000928		$0	$0	$0	$0	$0	$0	$0	$0	$0	$0	$0	$0	$0	$0	$0	$0	$0
36	TOTAL	0.014706		$0	$0	$0	$0	$0	$0	$0	$0	$0	$0	$0	$0	$0	$0	$0	$0	$0
37																				
38	*Incremental Value - to Entities*	Tax Rate	% to Entity/Agency																	
39	Davis County	0.002383	20%	$444,252	$0	$14,896	$14,896	$21,280	$21,280	$33,809	$33,809	$33,809	$33,809	$33,809	$33,809	$33,809	$33,809	$33,809	$33,809	$33,809
40	Davis County School District	0.008861	20%	$1,651,918	$0	$55,389	$55,389	$79,127	$79,127	$125,717	$125,717	$125,717	$125,717	$125,717	$125,717	$125,717	$125,717	$125,717	$125,717	$125,717
41	Syracuse City	0.001821	20%	$339,481	$0	$11,383	$11,383	$16,261	$16,261	$25,836	$25,836	$25,836	$25,836	$25,836	$25,836	$25,836	$25,836	$25,836	$25,836	$25,836
42	Weber Basin Water Conservancy District	0.000217	20%	$40,454	$0	$1,356	$1,356	$1,938	$1,938	$3,079	$3,079	$3,079	$3,079	$3,079	$3,079	$3,079	$3,079	$3,079	$3,079	$3,079
43	Davis County Mosquito Abatement District	0.000104	20%	$19,388	$0	$650	$650	$929	$929	$1,476	$1,476	$1,476	$1,476	$1,476	$1,476	$1,476	$1,476	$1,476	$1,476	$1,476
44	County Library	0.000392	20%	$73,079	$0	$2,450	$2,450	$3,500	$3,500	$5,562	$5,562	$5,562	$5,562	$5,562	$5,562	$5,562	$5,562	$5,562	$5,562	$5,562
45	North Davis Sewer District	0.000928	20%	$173,003	$0	$5,801	$5,801	$8,287	$8,287	$13,166	$13,166	$13,166	$13,166	$13,166	$13,166	$13,166	$13,166	$13,166	$13,166	$13,166
46	TOTAL	0.014706		$2,741,576	$0	$91,925	$91,925	$131,322	$131,322	$208,644	$208,644	$208,644	$208,644	$208,644	$208,644	$208,644	$208,644	$208,644	$208,644	$208,644
47																				
48	*Incremental Value - to Agency*																			
49	Davis County	0.002383	80%	$1,777,009	$0	$59,583	$59,583	$85,119	$85,119	$135,237	$135,237	$135,237	$135,237	$135,237	$135,237	$135,237	$135,237	$135,237	$135,237	$135,237
50	Davis County School District	0.008861	80%	$6,607,671	$0	$221,555	$221,555	$316,508	$316,508	$502,868	$502,868	$502,868	$502,868	$502,868	$502,868	$502,868	$502,868	$502,868	$502,868	$502,868
51	Syracuse City	0.001821	80%	$1,357,924	$0	$45,531	$45,531	$65,045	$65,045	$103,343	$103,343	$103,343	$103,343	$103,343	$103,343	$103,343	$103,343	$103,343	$103,343	$103,343
52	Weber Basin Water Conservancy District	0.000217	80%	$161,817	$0	$5,426	$5,426	$7,751	$7,751	$12,315	$12,315	$12,315	$12,315	$12,315	$12,315	$12,315	$12,315	$12,315	$12,315	$12,315
53	Davis County Mosquito Abatement District	0.000104	80%	$77,553	$0	$2,600	$2,600	$3,715	$3,715	$5,902	$5,902	$5,902	$5,902	$5,902	$5,902	$5,902	$5,902	$5,902	$5,902	$5,902
54	County Library	0.000392	80%	$292,315	$0	$9,801	$9,801	$14,002	$14,002	$22,246	$22,246	$22,246	$22,246	$22,246	$22,246	$22,246	$22,246	$22,246	$22,246	$22,246
55	North Davis Sewer District	0.000928	80%	$692,012	$0	$23,203	$23,203	$33,147	$33,147	$52,665	$52,665	$52,665	$52,665	$52,665	$52,665	$52,665	$52,665	$52,665	$52,665	$52,665
56	TOTAL	0.014706		$10,966,302	$0	$367,701	$367,701	$525,287	$525,287	$834,575	$834,575	$834,575	$834,575	$834,575	$834,575	$834,575	$834,575	$834,575	$834,575	$834,575
57																				
58	Expenses																			
59	*% Administrative Expense*					*20.0%*	*10.0%*	*6.0%*	*6.0%*	*4.0%*	*4.0%*	*4.0%*	*4.0%*	*4.0%*	*4.0%*	*4.0%*	*4.0%*	*4.0%*	*4.0%*	*4.0%*
60	Administration	4.9%		$540,558	$0	$73,540	$36,770	$31,517	$31,517	$33,383	$33,383	$33,383	$33,383	$33,383	$33,383	$33,383	$33,383	$33,383	$33,383	$33,383
61	Remaining Increment for Expenses			$10,425,745	$0	$294,160	$330,931	$493,769	$493,769	$801,192	$801,192	$801,192	$801,192	$801,192	$801,192	$801,192	$801,192	$801,192	$801,192	$801,192

Exhibit F

Reimbursement Summary and Draw Request

EXHIBIT F

In accordance with the Agreement, Developer shall receive certain Property Tax Rebate moneys to reimburse it for development costs associated with the Project as set forth in the approved Project Area Plan and identified in the table below.

DETAILED EXPENDITURES	
Syracuse City	
3 water vaults at $60,000 each	$180,000
Water lines	$125,000
Secondary water - booster pump and line	$150,000
Weber Basin Water Conservancy	
Pipeline portion and portion of meter vault	$173,000
Developer	
Roads Construction	$681,131
Culinary Water	$394,220
Storm Drain	$386,918
Sewer	$207,558
Secondary Water	$145,475
Electrical	$62,178
RMP	$94,973
Landscaping (along roadways)	$672,249
Value of Land Required for Roads & Easements	$565,336
Admin, Engineering , Survey and Testing	$229,974
Bonding	$63,744
City Engineering & Review Fee	$25,497
Soil Imbalance Cut/Fill	$1,065,800
Transmission Line Relocation	$190,000
Rail	$350,000
Tenant and Other End User Outreaches	
Tenant and other end user outreaches	$3,289,891
TOTAL EXPENDITURES (not incl. administrative costs)	**$9,052,944**

Reimbursement of Developer's Development and Certain Outreach Costs.

During the course of the Project, Developer will be expending funds necessary or appropriate for the development of the Project in accordance with the Developer Plan, which funds are subject to reimbursement in accordance with the Project Area Plan and the Agreement. The expenses that may be reimbursed are set forth in the above table under the headings "Developer" and "Tenant and Other End User Outreaches", but in each case reimbursed only in the manner as set forth below.

A. Development Costs

(i) By way of background, Developer will be incurring costs associated with the development of the Project, in the categories and within the overall dollar limit as set forth in the above table under the "Developer" (the "Development Costs"). Developer has entered into a Subdivision Agreement with the City, whereby Developer has agreed to construct certain infrastructure improvements as part of the overall site development and has placed funds into a third party escrow account (the "Escrowed Funds") to secure the completion of the portion of the infrastructure work attributable to the City (as opposed to infrastructure work that abuts Clearfield City). Developer has established other third party escrows and or set aside additional funds to complete the balance of the work, including the work that abuts Clearfield City. The escrow agreement between the City and Developer (the "City Escrow Agreement") requires an inspection by the Syracuse Public Works Director (the "Public Works Director") and an approval from the Syracuse City Manager (the "City Manager") prior to a release of Escrowed Funds for work completed.

(ii) Developer shall submit from time to time to the City Manager invoices and other evidence of costs expended by Developer and Developer's contractor(s) (including affiliates of Ninigret Construction Company, North, L.C.) and their respective subcontractors and/or materialmen who have performed services or provided materials pertaining to Development Costs, for the purpose of certifying that such costs are eligible for reimbursement from Property Tax Rebate moneys. Such amounts shall be certified by Developer as costs incurred in the development of the Project and shall be categorized by Developer in the particular area of development enumerated under "Developer" in the above table. In each such case, the City Manager and the Developer will undertake the same process to verify the Development Costs for reimbursement from the Property Tax Rebate moneys as set forth in the City Escrow Agreement, and as summarized generally below.

(iii) Together with the documents described above, Developer shall submit written requests to the City Manager for inspection of the work completed and for review of the invoices and other evidence of costs expended, all categorized under the particular Development Cost item. Within 30 days of receipt of Developer's written request for certification that such costs qualify as Project costs that are eligible for reimbursement from Property Tax Rebate moneys, the Public Works Director shall inspect the improvements to verify conformance with the City's engineering standards and specification.

a. If the Public Works Director determines that a particular improvement or other costs item does not conform to the City's engineering standards and specifications and the particular category of expenditure enumerated under "Developer" in the table above, or for other reasons, the Public Works Director shall provide Developer with a written detailed explanation for his findings and identify any adjustments or corrective measures necessary for Developer to meet the applicable criteria.

b. After inspection and verification that improvements and other costs items are in conformance with the City's engineering standards and specifications and the particular area of development enumerated under "Developer" in the table above, the Public Works Director shall notify the Agency's representative, recommending acceptance of said improvements and upon such approval such costs shall be accepted by the Agency as Developer's approved reimbursable costs for the purpose of receiving Property Tax Rebate money in accordance with the Agreement. In each such case, the Public Works Director's review and approval of Developer's work shall not be unreasonably withheld, conditioned or delayed.

B. Tenant and Other End User Outreaches.

(i) In conjunction and cooperation with representatives of Davis County Community and Economic Development and the City, Developer may from time to time propose outreach incentives to prospective businesses and companies wishing to locate within the Project Area, whether as a tenant or as an owner (the "Outreach Incentives").

(ii) Outreach Incentives shall seek to be formulated to attract quality companies and businesses to the City to provide an economic incentive to locate within the Project Area. The provision of Outreach Incentives shall be limited, in the reasonable determination of the Agency, to the permitted uses of tax increment funds under the Community Development and Renewal Agencies Act, Utah Code Ann. 17C-3-101, et. seq. (the "Act"). These Outreach Incentives may include, subject to the Act, reimbursement of a portion of property tax paid by the company, payment or reimbursement of fees associated with the development of the Project (including building permit fees, impact fees etc), moving expenses, reimbursement of employee training, and/or similar type of programs particular to the specific business and its stated needs or requirements.

(iii) Developer shall provide Davis County Community and Economic Development and the Agency with a copy of a draft incentive proposal for the prospective company seeking the Outreach Incentive. Developer shall coordinate with Davis County and the Agency to finalize such proposal and obtain their collective approval prior to extending such incentives to prospective businesses or companies.

EDA PROPERTY TAX REBATE
SAMPLE EXPENSE CERTIFICATION SUMMARY SHEET
NINIGRET NORTH I SUBDIVISION

CERTIFICATION REQUEST NO:
REQUEST DATE:
PERIOD TO:

A	B	C	D	E	F	G	H	I
			COSTS EXPENDED					
ITEM NO.	DEVELOPER EXPENSE CATEGORY	BUDGET AMOUNT	FROM PREVIOUS CERTIFICATIONS	THIS PERIOD	TOTAL EXPENDED TO DATE	ESTIMATED COST TO COMPLETE	ADJUSTMENT TO EXPENSE CATEGORY BUDGET (1)	REVISED EXPENSE CATEGORY BUDGET
1	Roads Construction	$681,131.00	$50,000.00	$100,000.00	$150,000.00	$531,131.00	$10,000.00	$691,131.00
2	Culinary Water	$394,220.00	$0.00	$0.00	$0.00	$394,220.00	-$10,000.00	$384,220.00
3	Storm Drain	$386,918.00	$0.00	$0.00	$0.00	$386,918.00		$386,918.00
4	Sewer	$207,558.00	$0.00	$0.00	$0.00	$207,558.00		$207,558.00
5	Secondary Water	$145,475.00	$0.00	$0.00	$0.00	$145,475.00		$145,475.00
6	Electrical	$62,178.00	$0.00	$0.00	$0.00	$62,178.00		$62,178.00
7	RMP	$94,973.00	$0.00	$0.00	$0.00	$94,973.00		$94,973.00
8	Landscaping	$672,249.00	$0.00	$0.00	$0.00	$672,249.00		$672,249.00
9	Value of Land Required for Roads & Easements	$565,336.00	$0.00	$0.00	$0.00	$565,336.00		$565,336.00
10	Admin, Engineering, Survey and Testing	$229,974.00	$0.00	$0.00	$0.00	$229,974.00		$229,974.00
11	Bonding	$63,744.00	$0.00	$0.00	$0.00	$63,744.00		$63,744.00
12	City Engineering & Review Fee	$25,497.00	$0.00	$0.00	$0.00	$25,497.00		$25,497.00
13	Soil Imbalance Cut/Fill	$1,065,800.00	$0.00	$0.00	$0.00	$1,065,800.00		$1,065,800.00
14	Transmission Line Relocation	$190,000.00	$0.00	$0.00	$0.00	$190,000.00		$190,000.00
15	Rail	$350,000.00	$0.00	$0.00	$0.00	$350,000.00		$350,000.00
	DEVELOPER TOTALS	**$5,135,053.00**	**$50,000.00**	**$100,000.00**	**$150,000.00**	**$4,985,053.00**	**$0.00**	**$5,135,053.00**
	TENANT OUTREACH	**$3,289,891.00**	$0.00	$0.00	$0.00	$3,289,891.00		$3,289,891.00

(1) Note: Category costs actually expended by Developer may vary from estimated costs set forth above, however total reimburseable amount is capped at $5,135,053.00.

Exhibit G

City’s Vested Laws

TITLE IV

PUBLIC PROPERTY/UTILITIES

CHAPTER 1

STREET AND SIDEWALK REGULATIONS

4-01-010: **Building Line on Street**
4-01-020: **Streets and Sidewalks Constructed by Individuals**
4-01-030: **Obstructions**
4-01-040: **Location of Poles on Streets**
4-01-050: **Height of Awnings, Porches and Signs**
4-01-060: **Street and Sidewalk Cleanliness**
4-01-070: **Excavations**
4-01-080: **Deferral of Construction**
4-01-090: **Temporary Restoration**
4-01-100: **Permanent Restoration**
4-01-110: **Annual Meeting and Disclosure**
4-01-120: **Restoration of Asphalt Cuts**
4-01-130: **Excavation Through Intersection Requires Dry Lines**
4-01-140: **Laterals**
4-01-150: **Restoration of Public Property**
4-01-160: **Prohibited Acts**
4-01-170 **Appeals**

4-01-010. **BUILDING LINE ON STREET.** No building or house erected on the boundary or edge of any street, lane, avenue, or alley of this City shall extend further into the street than the outer edge of the lot or the inner edge of the sidewalk.

4-01-020. **STREETS AND SIDEWALKS CONSTRUCTED BY INDIVIDUALS.** It shall be unlawful for any person, either as owner, agent, servant, contractor or employee, to construct any street or sidewalk within the public right-of-way unless a permit is first obtained from the Public Works Department to do so. Such street or sidewalk shall be constructed to lines and grades and specifications as given and established by the City Standards or unless special permission to deviate from such lines and grades is first obtained from the City. All such streets and sidewalks shall be constructed under the supervision of a city inspector, but the cost of indicating grade and lines shall be borne by the person constructing said street or sidewalk. (Ord. 12-07)

4-01-030. **OBSTRUCTIONS.** All persons are hereby forbidden to obstruct the sidewalks, crosswalks, or streets of this City, or to place any earth or substance on said sidewalks, or to permit any gate or other obstruction to swing across any sidewalk of this City to the annoyance of another person unless granted special permission by the Public Works Department to place obstructions on sidewalks or streets when necessary for improving the same or to provide protection when buildings are in the course of construction. (Ord. 12-07)

4-01-040. **LOCATION OF POLES ON STREETS.** All sign posts, , telephone or light poles, awnings, porch posts, or other obstructions shall be set at the outer edge of the sidewalk

at such places as the City Engineer may designate. No pole stubs shall be set on any , telephone, or light poles located on a public street or sidewalk within the City. (Ord. 12-07)

4-01-050. **HEIGHT OF AWNINGS, PORCHES, AND SIGNS.** All awnings, porch tops, and sign boards crossing or extending over any sidewalk in this City must be at least eight (8) feet above the grade of the sidewalk.

4-01-060. **STREET AND SIDEWALK CLEANLINESS**

A. It shall be the duty of the owner or occupant of private property fronting upon a public sidewalk to remove all weeds and noxious vegetation from such property and in front thereof to the curb line of the street and to keep the sidewalks in front of such property free from dirt, litter, snow, ice or obstructions. (Ord. 12-07)

B. It shall be the duty of general contractors, owner-builders, or owners of every residential or commercial building construction site to keep the construction site in a condition of cleanliness and healthfulness by:

(1) Preventing the accumulation of garbage or refuse, including boards, bricks, stones, trash etc., into disorderly stacks or piles. A commercial trash bin or suitable container, located on the site, shall be used for refuse on the construction site and shall be emptied when full;

(2) Maintaining the premises in such a manner that mice, rats, rodents, or animals do not inhabit the premises;

(3) Preventing garbage, refuse, dirt, rocks or building materials from encroaching onto sidewalks, curbs, gutters, streets, public property, or private property without the written consent of the owner, except that dirt may be used for the bridging of sidewalks during construction. However, use of dirt for bridging curb and gutter shall not be allowed. (Ord. 12-07)

(4) Preventing the blowing of paper or other debris onto neighboring properties.

CIn order to protect the function of the City's storm drainage system and ensure safety of the public, this Section shall be primarily enforced by the Syracuse City Building Department, with the assistance of the Police Department. When a violation occurs, a Building Department official may issue a stop work order on the construction project until the violation is corrected. Contractors, builders, or residents violating this section shall be guilty of a Class "B" misdemeanor. (Ord. 04-19) (Ord. 12-07)

4-01-070. **EXCAVATIONS.** It shall be unlawful for any person, except City personnel or those duly authorized by permit to excavate in any public right-of-way or remove any pavement or other materials forming any street or improvement thereof without first having obtained a permit therefore from the City. In order to obtain an excavation permit, an application shall be submitted to the Public Works Department , accompanied by an application fee in an amount established by the City fee schedule , stating the location of the proposed excavation, the nature and extent of the same, the purpose for which the excavation is necessary, the manner in which it is proposed to accomplish such excavating, the means to be employed to permit the unobstructed flow of traffic thereon, and the length of time the excavation will remain. The City shall issue, after determining that the proposed excavation is necessary and that the same will not unreasonably damage said public right-of-way, a permit to undertake and complete such excavation. (Ord. 12-07)

Prior to the issuance of a permit covering such excavation, the City shall require a bond issued by a licensed surety company of the State of Utah or a cashier's check made out in favor of Syracuse City in an amount sufficient to guarantee restoration of public infrastructure to its original condition. All persons or firms making such excavations must hold a valid license from the State of Utah and must maintain adequate public liability insurance. (R98-2) (Ord. 12-07)
No such excavation nor obstruction to any public right of way shall be made without notifying the City of Syracuse in advance of the time when it is proposed to begin such excavation. It shall be unlawful for any person to close any public right of way or to prevent the flow of traffic thereon without first obtaining permission therefore from the City of Syracuse. (Ord. 12-07)

All backfill shall meet standard specifications and all materials used shall be properly tamped or settled with a sufficient quantity of water to assure proper compaction. The contractor shall be required to test the compaction and submit such compaction report to the City. (Ord. 12-07)

It shall be unlawful for any person having made an excavation in any street, whether under a permit or otherwise to fail, neglect, or refuse for a period of five (5) days after notice, to restore said street to its normal condition. It shall be unlawful for any person, by or for whom any excavation is made in a public street or any purpose to fail to properly protect the work zone area so as to enclose such excavation, together with the dirt, gravel, or other material thrown therefrom, and to maintain such protection during the entire duration such excavation continues visible flasher lights shall be fixed to parts of such barricade, or in some other proper manner over or near the excavation, and over and near the dirt, gravel, or other material taken therefrom, and so kept from the beginning of twilight through the whole of every night during all the time such excavation exists. It shall be unlawful for any person to maliciously or wantonly, and without legal cause, to extinguish, remove, or diminish said lights or tear down or remove any rail, fence, or barricade fixed in accordance with the provisions of this Section. (Ord. 05-04) (Ord. 12-07)

General Requirements. Each permitee or excavator for permitee shall comply with the following requirements: (Ord. 12-07)

(A) Haul away and properly dispose of all materials removed from each single excavated area less than fifty feet (50') in length and twenty feet (20') in width. The trench or excavation shall be refilled with new crushed road base and compacted to ninety-six percent (96 %) and made ready for the asphalt finish surface. The trench or excavation shall be patched by the contractor in a thickness to match existing conditions or a minimum of four (4) inches of asphalt. (Ord. 12-07)

(B) Make proper provisions for protecting the public with necessary guards, barricades, lights, signals and with all other appurtenances necessary to safeguard the lives and property of the users of such roadway, sidewalk, and other facilities, before any excavation begins under this permit and at all times during the excavation. Visible flasher lights shall be used in hours of darkness. (Ord. 12-07)

(C) Be responsible for all liability or personal injury resulting from neglect; indemnify Syracuse City against all claims, demands, costs, damages, attorney fees or other expenses of any kind occasioned by such neglect; and upon request of the City, produce evidence of insurance adequate to cover such claims. (Ord. 12-07)

(D) Be responsible for restoring all public rights-of-way and Private improvements, including sidewalks, surfaces, curbs and gutters, driveways, ditches, sprinkler irrigation, and other landscaping, to their original condition, whether public or private, in a manner conforming to current Syracuse City specifications. (Ord. 12-07)

(E) Keep excavations to a minimum regardless of the age or condition of the pavement, and, wherever possible, locate excavations so that one "common" patch can cover as many excavations as possible. (Ord. 12-07)

(F) Restore roads to a passable and safe condition within sixteen (16) hours of commencing excavation. All remaining repairs and restoration shall take place within ten (10) calendar days from the date of the first excavation. All debris generated as a result of said excavation shall be removed immediately from the area upon completion of the excavation. If, within the standard ten (10) days, or other time period authorized by the City Engineer, the road cut or excavation has not been repaired as required, Syracuse City may place claim on the excavation bond to cover expenses necessary to complete the necessary repairs. The costs of repair shall include administrative costs. The permittee or excavator for the permitee shall be responsible for trench maintenance for one (1) year after the date it was inspected and approved by the Public Works Department. If repair of the road cut or trench is necessary within the initial one-year period, the permittee shall make repairs to the satisfaction of the City Engineer or, in the alternative, the City may place claim on the excavation bond and cause the repairs to be made. (Ord. 12-07)

(G) Limit the trench length left at grade but unpaved to a maximum of one thousand (1000'). feet. No excavation shall be allowed to continue until the one thousand (1000') feet of trench has been restored with proper asphalt surface and inspected and accepted by the City. (Ord. 12-07)

(H) Place flowable fill in all excavations of twelve (12) inches or less in width, prior to the application of an asphalt finished surface. (Ord. 12-07)

(I) Compact all backfilled excavations to ninety-six percent (96%). The contractor shall submit tests to the City confirming the compaction. (Ord. 12-07)

(J) Protect bore pits. Bore pits adjacent to or which may be hazardous to traffic shall not be left open or unshielded overnight. Shielding in conformance with the Manual on Uniform Traffic Control Devices shall be allowed in the case of large pits or extensive bore and jack operations. Contractors shall complete small bores under two lane roadways in one continuous operation. (Ord. 12-07)

(K) Utilize common trenching in all subdivisions, unless otherwise approved or excepted by the City Engineer. (Ord. 12-07)

(L) Bore all utility excavations whenever possible. (Ord. 12-07)

4-01-080. **DEFERRAL OF CONSTRUCTION.** The City Engineer may, in the Engineer's reasonable discretion, and subject to the provisions of any approved Franchise Ordinance or Agreement of the City, defer construction or other activity under any permit provided for in this chapter, until such time as the Engineer deems it proper in all cases where the public place on which the work is desired to be done is occupied or about to be occupied in any work by the City, or by some other person having a right to use the same in such manner as to render it seriously inconvenient to the public to permit any further

obstruction thereof at such time, and in granting such permit, may so regulate the manner of doing such work in order to cause the least inconvenience to the public in the use of such public place; and in all cases any work of the City or its contractors or employees for municipal purposes shall have precedence over all work of every other kind. (Ord. 12-07)

4-01-090. **TEMPORARY RESTORATION.** Anyone issued a permit for excavation or other activity under this chapter shall temporarily restore any disturbed public right of way or other public place to a condition approved by the City Engineer, within seven (7) days after completion of the work for which the permit was issued. This requirement of temporary restoration may be waived by the City Engineer upon a determination that after consideration of the potential for settlement of the excavated area there is not a significant risk of settlement. (Ord. 12-07)

4-01-100. **PERMANENT RESTORATION.** Excavator shall complete permanent repairs of the temporary restoration within one (1) year after completion of the work for which the permit was issued. If the excavator fails to complete the permanent restoration within this time period and in a manner approved by the City Engineer, the City may perform the restoration and bill the permittee for the repair. All permanent repairs shall be bonded for at the time of the issuance of a permit. Upon failure to complete applicable permanent restoration and receving notice from the City, the City shall place claim to said bond for reimbursement of incurred expenses to complete the restoration. The permittee may, at the time the permit is issued, contract with the City for the completion of the permanent restoration. (Ord. 12-07)

4-01-110. **ANNUAL MEETING AND DISCLOSURE.** Beginning November 2000, and by the first week of January of each succeeding year, the City Engineer shall provide to all utilities, a list of street and other improvements planned for the following three successive years. All agencies, utilities, franchises, and other entities planning work in a public right of way or other public place that will require a permit under this Chapter shall submit a list of proposed projects and locations to the City Engineer by December 31st of each year. This list shall cover the planned projects for the following three years. These lists of planned projects shall be entered in to the City's Geographic Information System and integrated with other information on street condition and use. For the purpose of this subsection, the term "planned projects" does not include new construction that could not have reasonably been foreseen at the beginning of the year. The City Engineer may deny entities or agencies that fail to provide this information, permits for construction or other activity under this chapter unless the entity was not provided a list of planned street improvements by the City for that year. The City may hold an annual meeting for the purpose of providing and explaining such list. (Ord. 12-07)

4-01-120. **RESTORATION OF ASPHALT CUTS.** For any asphalt surface three (3) years old or less, excavator shall provide new asphalt for the length of the cut and the width of all lanes affected by the construction or other activity. For any asphalt surface where thirty percent (30%) or more of the width of any lane is affected by the construction or other activity, excavator shall provide new asphalt for the length of the cut and the width of all lanes affected. For all other asphalt surfaces, excavator shall provide new asphalt for the length and width of the affected area as required in this Chapter. The City Engineer may require that the surface of the street receiving new asphalt be rotomilled prior to resurfacing. (Ord. 12-07)

4-01-130. **EXCAVATION THROUGH INTERSECTION REQUIRES DRY LINES.** Every person seeking a permit to excavate in or through an intersection shall be required to place conduit in the open trench for the purpose of allowing placement of future utilities without disruption to the surface of the right-of-way. (Ord. 12-07)

4-01-140. **LATERALS.** The City shall notify all abutting property owners along the affected portion of a street proposed for opening by the City, and a permittee shall notify all property owners as determined by the last tax assessment rolls, of the intent to open the street and shall provide to each owner, an opportunity to place, at the owners expense, laterals for the utilities to their property, prior to closing the trench. No excavation for laterals shall be allowed for a period of three (3) years after construction or reconstruction of a street, where such notice was given and the property owner declined to install the lateral.

The City Engineer may waive this barrier to entering a street if the required notice was not sent or if the engineer determines that the excavation is necessary to provide an essential service that cannot be provided, except by cutting the street. The permittee shall pay a fee equal to the estimated damage to the useful life of the street and any associated repairs and shall repave that portion of the street necessary to restore it, as close as possible, to its original condition, as determined by the City Engineer. (Ord. 12-07)

4-01-150. **RESTORATION OF PUBLIC PROPERTY.** Permitee or excavator for permitee shall:

(A) Restore the surface of any Public way to its original condition at the permitee's own expense and shall replace any removed or damaged pavement with the same type and depth of pavement of that which is adjoining, thickness not to be less than four (4) inches including the gravel base material not to be less than eleven (11) inches. All restoration shall conform to the engineering regulations; design standards and specifications promulgated by the City and shall be accomplished within the time limits set forth in this Chapter, unless additional time is granted in writing by the Public Works Department. In the event of any conflict between City Standards and Specifications and the Ordinance, the Standards and Specifications shall be controlling. (Ord. 12-07)

(B) Be responsible for any necessary repair of a temporary restoration of a public right-of-way or other public place until the permanent restoration is completed. Permittees or excavators shall be responsible for any necessary repair of a permanent restoration until the public right-of-way or other public place has been repaved, reconstructed, or until five (5) years after the completion of a permanent restoration, whichever occurs sooner, unless the permittee contracted with the City for permanent restoration. If the permittee fails to complete any necessary repair of a filled temporary restoration within three (3) calendar days or a permanent restoration within thirty (30) calendar days of being notified to do so by the City, the City may complete the repair and bill the permittee for the costs of such repair. (Ord. 12-07)

(C) Request, if they so choose that the City restore the surface to its original condition. The fee for such resurfacing shall be determined by the City Engineer in accordance with its reasonable costs for such excavation and shall the permitee for the amount. Payment for said excavation shall be received by the City prior to the release or expiration of the bond, whichever occurs sooner. (Ord. 12-07)

4-1-160. **PROHIBITED ACTS.** It shall be unlawful for any person to destroy, deface, or in any manner injure any public street or sidewalk.

It shall be unlawful for any person intentionally or carelessly to throw, cast, or put into, drop, or leave in any street, gutter, sidewalk, or public place any stones, gravel, sand,

coal, dirt, manure, garbage, leaves, lawn or hedge clippings, rubbish of any kind, snow, or any other substance. (1971) (Ord. 12-07)

4-1-170 Appeals. Any person aggrieved of the denial or revocation of a permit under this Title may appeal such decision to the City Council by filing written notice of appeal within fifteen (15) days from the date of the decision. (Ord. 12-07)

CHAPTER 2:

SEWER REGULATIONS

4-02-010. North Davis County Sewer District.
4-02-020. When Owner Required to Connect to Sewer.
4-02-030. Permit Required.
4-02-040. Independent Service Lines Necessary.
4-02-050. Discharging Excessive Water into Sewer.
4-02-060. Subdivision and Other Developments.
4-02-070. Damage.
4-02-080. Manholes.
4-02-090. Pretreatment and Discharge Permit Requirements.
4-02-100. Wastewater Discharge Prohibitions and Limitations.
4-02-110. Authorization Necessary to Reconnect.
4-02-120. Authorized Representative to Have Free Access.

4-02-010. North Davis County Sewer District.

The corporate limits of Syracuse City are within the area of the North Davis County Sewer District (the "District"), which is organized under Utah law. All ordinances, rules and regulations of the District are hereby adopted and incorporated herein by reference.

4-02-020. When Owner Required to Connect to Sewer.

The owner of all houses, buildings, or properties used for human occupancy, employment, recreation, commercial, industrial or other like purposes, situated within the corporate limits of the City and abutting on any street, alley or right-of-way in which there is now located or may in the future be located a public sanitary or combined sewer owned and operated by the City or owned or operated by the District, is hereby required, at his expense, to install suitable facilities therein, and to connect such facilities directly with the proper public sewer in accordance with the provisions of this Chapter, within ninety (90) days after date that said public sewer is available for use, provided that said public sewer line is within three hundred feet (300') of any such building discharging sanitary or industrial waste.

4-02-030. Permit Required.

No unauthorized person shall uncover, make any connections with or opening into, use, alter, or disturb any public sewer or appurtenance thereof for any reason without first obtaining a written permit from the District or the owner of such sewer facilities.

4-02-040. Independent Service Lines Necessary.

A separate and independent service lateral shall be provided for every building. The City Engineer may consider exceptions in cases such as, where one building stands at the rear of another or on an interior lot and no Public sewer is available or can be constructed to the rear building other than routing a pipe through an adjoining alley, court, yard, or driveway. In this case, the service lateral from the front building may be extended to the rear building and the whole considered as one service lateral. (Ord. 12-07)

4-02-050. Discharging Excessive Water into Sewer.

It shall be unlawful for any person to discharge or cause to be discharged any storm water, surface water, ground water, roof runoff, or subsurface drainage into any sanitary sewer. Such storm water and all other unpolluted drainage shall be discharged to such sewers as are specifically designated as storm sewers, or to a natural outlet consisting of water courses, ponds, ditches, lakes, or other bodies of surface or ground water provided for receiving the same.

4-02-060. Subdivision and Other Developments.

No subdivision plat, industrial park, or commercial development shall be approved or recommended by the City Planning Commission, nor shall a building permit or certificate of occupancy be issued for any lot or part thereof or for the whole thereof, unless the City shall have first received a signed document from the District approving the sewer aspects of the proposed development.

4-02-070. Damage.

No person shall intentionally or negligently cause any damage to the sewer system.Repairs necessary for any damage caused shall become the responsibility of the person causing the damage. (Ord. 12-07)

4-02-080. Manholes.

No person shall open a manhole of the sewer system without first receiving authorization to do so from the City.

4-02-090. Pretreatment and Discharge Permit Requirements.

A. Those persons required to pretreat wastewater in order to comply with Federal pretreatment standards and/or District wastewater control rules and regulations and any permits issued thereunder shall provide, operate, and maintain the necessary pretreatment facilities in accordance with the District pretreatment regulations.
B. Industrial users required to apply for a discharge permit pursuant to the District wastewater control rules and regulations shall obtain such permit prior to discharging into the sewer system. Applications shall be in the form prescribed by the District Board.

4-02-100. Wastewater Discharge Prohibitions and Limitations.

A. Generally. No person shall discharge into the sewer system any substance or in a manner which, under ordinary circumstances, either (1) is harmful or detrimental to or interferes with either the sewer system, the functioning of the sewer system, the environment, or the public health, or (2) causes sewage to pass through the sewer system without treatment and thereby creating a significant health hazard or diminishing the quality of the environment.
B. Discharge Prohibitions. No person shall discharge into the sewer system any substance or discharge into the system in a manner which violates the wastewater discharge prohibitions and limitations contained within the District wastewater control rules and regulations currently in force and as amended from time to time, which are incorporated by this reference as a part hereof as though fully set forth herein, together with any schedules or appendices which are a part of the District wastewater control rules and regulations.

C. Immediate Reporting. Immediately upon discharging a prohibited substance or upon discovering that a prohibited substance has been discharged, the person performing or discovering such discharge shall immediately notify the staff of the District of the discharge by the most rapid available means, if such person knows or reasonably should have known that (1) the substance was discharged, and (2) the discharge of the substance was prohibited. Notification pursuant to this Subsection does not relieve the person notifying of any liability, except liability for violation of this Subsection.

D. Preventing Accidental Discharge.

1. Generally. Every person conducting an activity which creates a substantial risk that a prohibited substance will be discharged into the sewer system shall provide adequate protection against accidental discharge of such a prohibited substance by either (1) implementing procedures or practices which tend to reduce the likelihood of such a discharge and/or (2) installing facilities designed to prevent such accidental discharge. The District General Manager may identify persons required to provide such protection and direct them to comply with this Subsection.
2. City/ District Requirements. The City Public Works Director and/or the District General Manager are hereby authorized to specify particular procedures, practices, and/or facilities which shall be implemented by any person, (1) if the District General Manager finds that there is substantial risk of a discharge prohibited by this Section if preventive measures are not undertaken, and (2) if such procedures, practices and/or facilities substantially reduce the risk of discharge prohibited by this Section, and (3) if the cost of implementing such procedures, practices, and/or installing such facilities is found by the City Council and/or District Board to be reasonable in light of both the potential damage to the sewer system and/or the environment if an accidental discharge occurs, and the effectiveness of the equipment in preventing such an accidental discharge.
3. Plans. In every case where facilities are required to be installed pursuant to this Subsection, the Public Works Director and/or District General Manager are hereby authorized to require submission of detailed plans for the required facilities and their operation before construction of the facilities is begun.

E. Preventive Requirements.

1. Report. Within five (5) days after the discharge of a prohibited substance, the person who discharged such substance shall file with the City a written report describing (1) the nature and content of the discharge, (2) the cause(s) of the discharge, and (3) remedial measures to be taken by the discharger to prevent similar discharges in the future. The City Public Works Director or his designee may inspect the site of the accidental discharge and interview any person involved in the discharge in order to ascertain or confirm what happened and assure that remedial measures adequate to prevent future accidents are carried out as represented.
2. Authorization to Require Changes. If (1) a person has discharged a prohibited substance, and (2) it is likely that the same person will again discharge a similar prohibited substance in the future if preventive measures are not undertaken, then the Public Works Director is hereby authorized to require the person who discharged the prohibited substance to make change(s) in equipment, facilities, procedures, or practices, which change(s) (1) have the effect of substantially reducing the risk of a similar discharge in the future, and (2) are found by the Public Works Director to be reasonable in cost in light of the potential damage to the system and environment arising out of a similar prohibited discharge in the future. Nothing in this Subsection relieves any person of any liability, except liability for violation of this Subsection.

F. Self-Monitoring and Reporting. The Public Works Director is hereby authorized to

require that persons discharging into the sewer system, other than persons discharging only ordinary domestic sewage, monitor and report their sewage discharges in a manner and to the extent necessary to: (1) provide adequate compliance with and enforcement of the District's wastewater control rules and regulations; (2) assess the source of the components of the sewage transmitted by the City and treated and disposed of by the District; and (3) charge reasonable fees and surcharges to dischargers based on actual discharges or reasonable classifications of discharges. The Public Works Director is further hereby authorized to require that such monitoring and reporting be performed at the expense of the person discharging. Every person required to monitor and report pursuant to this Section shall monitor and report as required by the District wastewater control rules and regulations and in conformity with this Section.

G. Compliance Monitoring. The District Pretreatment Administrator is hereby authorized to sample and analyze the sewage of, and inspect the facilities of persons discharging into the sewer system in order to determine or verify compliance with this Section. The City Council is further authorized to require the installation of reasonable facilities, such as manholes, to enable such sampling. However, nothing in this Section limits any power that the City or District may have to investigate or enforce compliance with other sections of this Ordinance or through means not specified in this Subsection.

H. Strict Liability. Any person violating any provision of this Section shall be guilty without regard to fault, knowledge, intent, or the state of mind of the person committing the violation.

I. Nuisance. Any condition or situation which causes a violation of this Section is hereby declared to be a public nuisance and may be abated as provided by law.

4-02-110. Authorization Necessary to Reconnect.

It shall be unlawful for any person, after sewer service to any premises has been discontinued or disconnected for any reason whatsoever, to reconnect or resume such service or for the owner or occupant of such premises to allow the same to be reconnected or resumed without being authorized by the City.

4-02-120. Authorized Representative to Have Free Access.

Free access shall, at all ordinary hours, be allowed to authorized representatives of the City and/or the District or other owner of such sanitary sewer to inspect and examine such facilities, including service laterals connected to the building, to inspect the plumbing and facilities therein and the manner of use of such sewer facilities, and to determine compliance with the rules and regulations of the City and/or the District or other owner of such sanitary sewer facilities.

CHAPTER 3

WATER

4-03-010. Purpose and Title.
4-03-020. Public Works Department.
4-03-030. Water Superintendent.
4-03-040. Water System.
4-03-050. Rules and Regulations.
4-03-060. Duty to Maintain.
4-03-070. Authority to Shut Off.
4-03-080. Duty to Treat.
4-03-090. Access for Water Superintendent.
4-03-100. Liability.
4-03-110. Application for Connection and/or Service.
4-03-120. Water Service Authorized.
4-03-130. Obligation of Owner.
4-03-140. Misrepresentation.
4-03-150. Applications Non-Transferable.
4-03-160. Fees.
4-03-170. Special Rates.
4-03-180. Billing.
4-03-190. Delinquent Payments.
4-03-200. Notice of Shut Off.
4-03-210. Shut Off.
4-03-220. Stay of Shut Off.
4-03-230. Legal Action.
4-03-240. Voluntary Discontinuance.
4-03-250. Service Lateral Installation.
4-03-260. Service Lateral Maintenance.
4-03-270. Service Lateral Replacement.
4-03-280. Service Lateral Repair or Alteration.
4-03-290. Service Lateral Location.
4-03-300. Extension of Water System Within the City.
4-03-310. Extension of Water System Outside the City.
4-03-320. Meter Installation and Maintenance.
4-03-330. Meter Required.
4-03-340. Meter Accuracy.
4-03-350. Meter Tampering.
4-03-360. Illegal Use of Water Pressure.
4-03-370. Unauthorized Service.
4-03-380. Unauthorized Connection.
4-03-390. Damage to Water System.
4-03-400. Emergencies.
4-03-410. Waste Prohibited.
4-03-420. Sprinklers.
4-03-430. Curtailment.
4-03-440. Turning Water Off.
4-03-450. Cross Connections.
4-03-460. Maintenance and Control of Hydrants.
4-03-470. Tampering with Hydrants.
4-03-480. Hydrant Use by City Departments.
4-03-490. Private Use of Fire Hydrant Water.

4-03-500. **Fire Hydrant Water Use Permit.**
4-03-510. **Secondary Water Connection.**
4-03-520. **Wellhead Protection.**
4-03-530. **Penalty.**
4-03-540. **Board of Equalization.**

4-03-010. Purpose and Title.
The purpose of this Chapter is to establish and provide requirements, regulations and procedures for the governing and administration of the Syracuse City Water System. This Chapter shall be known as and may be referred to as the Syracuse City Water System Ordinance.

4-03-020. Public Works Department.
The Public Works Department shall have authority to operate and maintain the Syracuse City Water System, hereinafter referred to as the "water system," and to furnish water service to the residents of the City in accordance with the provisions of this Title. To accomplish these purposes, the Public Works Department is empowered to employ persons, purchase and approve real property, acquire equipment and perform all other acts necessary or incidental to the accomplishing of the above- described purposes, subject to all applicable ordinances, resolutions, rules, regulations and policies of the City.

4-03-030. Water Superintendent.
The Water Superintendent shall administer and enforce this Chapter under the direction of the Public Works Director and the City Manager and shall manage the City's water system pursuant to the provisions of this Chapter and all other applicable ordinances, rules, regulations and policies of the City. The Water Superintendent shall have such other duties and responsibilities as designated by the City Council. (Ord. 12-07)

4-03-040. Water System.
The water system constructed or otherwise acquired by the City to supply water is the property of the City and shall be under the sole and exclusive control and jurisdiction of the City. The City may enter into contracts with other governmental entities and/or wholesale water delivery providers for the purchase of water and may acquire water rights, water shares, etc., as it deems appropriate or desirable for the City's water system.

4-03-050. Rules and Regulations.
The City Council may from time to time by resolution establish rules and regulations regarding the establishment, installation, operation, control and modification of the City water system in accordance with the provisions of this Chapter.

4-03-060. Duty to Maintain.
The Public Works Department shall keep the water system in good repair. Any leaks, breaks or equipment failures of the City water system shall be promptly repaired in accordance with the provisions of this Chapter.

4-03-070. Authority to Shut Off.
The Public Works Department shall have the power and authority to temporarily discontinue water service to any area without notice, for the purpose of repairing and maintaining the water system.

4-03-080. Duty to Treat.

The Public Works Department shall treat or cause to be treated the water furnished to the water users hereunder using current water treatment methods such that the water shall conform to State and Federal standards of purity and fitness for culinary use.

4-03-090. Access for Water Superintendent.

As a condition of a person receiving water service from the City, the Water Superintendent and his or her authorized agents shall, at all reasonable hours and/or upon such notice as is reasonable under the circumstances, have free access to any place supplied with water service from the City's water system for the purpose of examining the apparatus, the amounts of water used, the manner of use, and to make any and all necessary adjustments to said systems or shut off for vacancy, delinquency or violation of applicable ordinances, rules or regulations of the City.

4-03-100. Liability.

Except as otherwise provided in the Utah Governmental Immunity Act, set forth in *Utah Code Ann.* §§ 63G-7, *et seq.*, as amended, the City shall not be liable or responsible for any loss, damage, or injury, direct or indirect, to a water user, the user's family, guests, tenants, invitees, or any person, or the real or personal property of any person arising out of or caused by the City water system, or by the cessation or interruption of City water supply. (Ord. 12-07)

4-03-110. Application for Connection and/or Service.

The record owner of property desiring to connect to and to receive service from the City water system shall submit an application for water connection and/or service to such property in writing to the City in such form as provided by the City. If the property is not already connected to the City water system through an approved service lateral or if an extension of the water main is required for service, the provisions of this Chapter regarding the installation of service laterals and extensions shall be followed.

4-03-120. Water Service Authorized.

Water service may be furnished or restored to premises if the person requesting such service substantially complies with the following provisions.

A. Application. The property owner of the premises fills out, signs and files with the City an application for water service as provided in Section 9-01-110.
B. Deposit. The applicant pays a deposit in the amount set forth by resolution in the City Consolidated Fee Schedule.
C. Fees. The applicant shall pay the cost of a water meter as set forth in the Consolidated Fee Schedule. In the event the property owner is required to install a service lateral or extend the water system prior to connection, the applicant shall be required to make all installments and connections at applicant's cost.
D. Current Charges. Before water will be turned on to any premises, all charges due and owing to the City by the applicant(s) for water must be paid.

4-03-130. Obligation of Owner.

The record owner of property to be served by the City water system must appear as the applicant for water connection and service and shall be held responsible to the City for payment of all water service fees and charges incurred by that connection. Owners of property that rent, lease or otherwise give the said property over to the tenancy of

another, shall remain liable for the water services furnished to the property, including all fees and charges incurred by a renter or lessee or other occupant of the owner's premises. It shall be the duty of the property owner to notify the City of termination or change in ownership of the property.

4-03-140. Misrepresentation.

It shall be unlawful to misrepresent a material fact in applying for water connection and service. Material facts include, but shall not be limited to, the identity of the applicant as the owner or tenant of the property to be connected and the purpose for which the water service to be provided will be used.

4-03-150. Applications Non-Transferable.

Water service and connections shall not be transferred to a location different from that shown on the application for water service nor from where originally used, nor may a larger water connection be subdivided into several smaller connections.

4-03-160. Fees.

The City Council shall, by resolution, set forth in the Consolidated Fee Schedule the fees to be charged for the base rate water service charge, service charges other than the base rate, water meter fee, impact fees, fee for use of water from fire hydrants, water service deposits, and all other appropriate fees required herein. Rates for services furnished shall be uniform with respect to each class or classes of service established by the City or that may hereinafter be established.

4-03-170. Special Rates.

The City Council may from time to time fix by agreement or resolution, special rates and conditions for users using exceptionally large amounts of water service or making use of the water system under exceptional circumstances, upon such terms and conditions as it deems appropriate.

4-03-180. Billing.

The City shall provide a statement to each user of water once each month or at such other regular intervals as the City Council shall direct. The City Council shall determine the duration of the billing period and may change the amounts of the charges or the duration of the billing period from time to time. The City may send a combined statement for water, sewer, garbage collection and other services provided by the City, which statement shall separately specify the amount of the bill for the water service, sewer service, garbage collection and any other service, the place of payment, and the due date. All bills shall be paid in full and no partial payments shall be sufficient, absent the written consent of the Utility Billing Clerk to prevent the termination of services as provided herein. (Ord. 12-07)

4-03-190. Delinquent Payments.

If any user fails to pay his or her water, sewer, garbage or other service charge for services provided by the City within thirty (30) days from the date the payment is due, the Utility Billing Clerk shall notify the Public Works Department of the deficiency and the Public Works Department may thereafter shut off all water service to said premises in the manner set forth in this Chapter. Where amounts are due for more than one billing period, any payment received shall be applied toward the most recent billing for which an amount is due. A dishonored check shall not be considered payment received.

4-03-200. Notice of Shut Off.

If any user fails to pay his or her water, sewer, garbage or other service charge for services provided by the City within thirty (30) days from the date the payment is due, the Utility Billing Clerk shall notify in writing the occupant of the premises and the owner thereof by personal delivery or mail, to the premises and any other address that appears on the application of the delinquency and that the water service will be discontinued if payment is not received within ten (10) days after notice is sent.

4-03-210. Shut Off.

If any user fails to pay his or her water, sewer, garbage or other service charge for services provided by the City within the required time frame after service of a notice of shut off, the Utility Billing Clerk shall cause a notice to be served personally to the property owner or occupants explaining the reason for the shut off and that the water service may thereafter be shut off if payment is not made within three (3) days from the date of such notice. If the delinquent payments are not made within three (3) days from the date of such notice, and no stay has been issued in accordance with the provisions of this Chapter, the City may shut off water service to the premises. Before water service to the premises may be turned on again, all delinquent water, garbage and other charges for services provided by the City must be paid, together with the appropriate shut off charge as provided in the City Consolidated Fee Schedule.

4-03-220. Stay of Shut Off.

The Utility Billing Clerk may extend the time for bringing current a delinquent account for up to fifteen (15) days. In addition, the user may file a written request for review of the billing with the City Manager. Such request for review shall set forth the customer's good reason to believe an error has occurred in the billing, which error has resulted in a billing amount in excess of service actually rendered, and setting forth the facts and arguments in favor of the customer's position. Any appeal of a bill as set forth herein, shall stay any action by the City to shut off water service for fifteen (15) days or until a determination has been made by the City Manager, whichever occurs first. Written notice of the decision and the action to be taken shall be provided to the customer.

4-03-230. Legal Action.

The City Recorder or Treasurer, is hereby authorized and empowered to enforce the payment of all delinquent City service charges and connection fees whether for water, sewer, garbage or other services, by an action at law in the corporate name of the City.

4-03-240. Voluntary Discontinuance.

Any user desiring to discontinue service shall notify the Utility Billing Clerk in writing at least ten (10) days before the date when such service is to be discontinued. Any credit balance in favor of the user as a result of deposit will be refunded promptly after receipt of notice of discontinuance of service.

4-03-250. Service Lateral Installation.

The property owner, or his or her agent, desiring to obtain water service, shall be responsible at his or her sole expense for installing a service lateral to the curb or property boundary line of his or her property which meets the following requirements.

A. The service lateral shall be made of such material and quality specified in the City's construction codes and standards.
B. The service lateral installation shall include all pipe mechanisms, meter boxes, valves and other equipment, except meters and other equipment to be installed by the City, required for proper service as designated by the City construction codes and standards and the provisions of this Chapter.
C. The service lateral shall be buried at a depth and grade specified in the City

construction codes and standards.

D. The service lateral shall be located and installed the required distance from other service pipes in accordance with City construction codes and standards.

E. The service lateral shall not run across property owned in fee by a person other than the property owner who is applying for connection, unless written permission is obtained from the City and a satisfactory easement is obtained from the affected property owner.

F. The service lateral shall supply water to no more than one building, except that where permission is obtained by the property owner from the City and as approved by City Engineer. Connection of more than one building may be made to such a service lateral, if the property owner applying for the connection is the owner of all buildings connected to said service lateral. For the purpose of payment of fees required under the provisions of this Chapter, each building which receives water service through a common service lateral shall be deemed to receive water service through a separate service lateral and the property owner shall be required to pay appropriate charges for each building receiving water service. (Ord. 12-07)

G. The service lateral to be connected to the City water system shall be inspected by an inspector of the City Public Works Department and found to conform to the provisions of this Chapter, the Plumbing Code as amended and adopted by the City, and all other applicable construction standards, ordinances, rules and regulations, prior to backfilling. It shall be the property owner's responsibility to ensure that the service lateral and all other underground water lines or connections to be inspected are open and visible to the inspector at the time of the inspection.

H. No service lateral shall be connected to the City water system until all requirements of this Section are complied with and the lateral has been inspected and approved by the City.

4-03-260. Service Lateral Maintenance.

Subject to the provisions of this Chapter, water service users shall keep their service laterals and connections and other apparatus in good repair and protected from frost at their own expense. Each property owner shall own and shall bear the sole responsibility for repair, upkeep and maintenance of the service lateral from the property side of the water meter to the premises being served. The City shall not accept nor bear any responsibility for any leaks, or damages caused by leakage, in the service lateral. Without incurring any liability to the property owner, the City may make emergency repairs to service laterals in order to mitigate damage, prevent waste of water, and prevent contamination of the water supply. Any such repairs shall be at the property owner's expense and shall be billed to the property owner by the City.

4-03-270. Service Lateral Replacement.

The replacement of a previously used service lateral shall be deemed a connection and the provisions for installation and connection of a new service lateral shall apply to said replacement.

4-03-280. Service Lateral Repair or Alteration.

It shall be unlawful for any person to open, alter, repair, or connect to any existing service lateral without first having received a permit therefore from the Public Works Department. Except as otherwise provided herein, no permit shall authorize the alteration of or connection to a service lateral which results in the availability of water service to a building to which such service was not furnished before the alteration or connection is made.

4-03-290. Service Lateral Location.

The City assumes no responsibility for nor shall it warrant or guarantee the specific location of water service laterals as shown on as-built drawings furnished by developers and/or contractors. Persons applying for building permits may inspect the as-built drawings by developers and/or contractors if they desire to do so in connection with locating service laterals, however, the City will not take responsibility for the accuracy of such documents. Persons desiring to obtain such information from the City shall be required to sign an appropriate disclaimer.

4-03-300. Extension of Water System Within the City.

A. Application. Whenever any person, firm or corporation subdivides, develops or builds upon any property within the City which requires the installation or extension of a water main from an existing main, the person, firm or corporation seeking approval of the subdivision or development of the property shall submit an application for extension of and service from the City water system for the development. The application shall set forth the distance and location of the proposed extension, a map of the extension, the size, location and number of connections that applicant will require, and the intended use; i.e. residential, multi-family, commercial and/or industrial.

B. Review. The application shall be submitted to the City by the developer with the preliminary plat or site plan review for the development and shall be reviewed by the City Engineer. Upon a finding by the City that the City has available water rights, water source capacity, and water distribution and storage facility capacity to serve the proposed development with a year round supply of water, the application may be accepted.

C. Agreement. Upon acceptance of the application for extension and water service, the developer shall enter into a written extension agreement with the City specifying the terms and conditions under which the water extensions and connections shall be made to the City water system and the payments that shall be required.

D. Expense. The developer shall be required, at his or her own expense, to make, construct, and lay such extension from the existing main to the proposed subdivision, development or building. Developer shall construct at its sole expense, the internal or on-site water distribution system required to serve the individual consumers within developer's subdivision or development, including all booster pumps, on-site storage, and other appurtenant facilities as well as any off-site reservoir required for the development. All improvements shall be constructed in accordance with the City's specifications. Service and connection to the City water system shall not be permitted until such improvements are inspected, approved and accepted by the City.

E. Easements. Where possible, provisions shall be made for the construction of all line extensions and distribution lines within public streets and easements. Where lines must cross private property, developer shall obtain at developer's sole expense, all required and necessary easements in satisfactory and recordable form.

F. Dedication. Upon compliance with all conditions and requirements set forth herein, developer shall convey to the City, free and clear of all liens and encumbrances, except for those specifically agreed to in writing by the City, and by conveyancing instrument acceptable to the City, the following:

    1. Any extension of the City's main transmission system constructed by developer and donated to the City as provided herein, together with all necessary pipeline easements and rights-of-way for the operation, maintenance, repair and replacement of the same.
    2. The internal subdivision distribution system and all appurtenant facilities specifically including but not limited to all distribution lines, pumps, storage facilities, booster pumps, and any required treatment facilities, together with all appurtenant easements and rights-of-way for the operation, maintenance, repair and replacement of the same.

G. Reimbursement. Where any person, firm or corporation subdivides or develops property subject to these provisions and is required to make expenditures which in the opinion of the City Council should not be borne wholly and solely by such developer because other subsequent developments will benefit directly therefrom, the City Council may enter into an agreement with the developer for reimbursement on a proportionate basis for his or her actual costs as subsequent users connect to the main extension. As a condition of such reimbursement and prior to final approval and acceptance of the main extension by the City, the developer shall submit to the City a verified list of costs which shall form the basis of the reimbursement agreement taking into consideration the benefit of the line to the developer.

4-03-310. Extension of Water System Outside the City.

The City may furnish water service from its water system to persons outside the City in accordance with the provisions of this Section provided that such water service is available and will in no way deprive the residents of Syracuse City of water consumption. Nothing contained herein shall be construed to obligate the City to extend its system to provide water service to persons outside the boundaries of the City.

A. Petition. Any person or persons located outside the City limits who desires to be supplied with water service from the City water system may make application to the City Council for such extension and service by petition. The petition shall set forth the distance and location of the proposed extension, a map of the extension, the size, location and number of connections that petitioner will require, and the intended use. Petitioner shall be required to pay in advance the entire cost of extending the City water system to provide such service. In addition to the requirements set forth in this Section, the petition shall contain a certified acknowledgment that the petitioner understands that the City in granting the petition need only supply such water to the petitioner from time to time as shall be deemed by the City Council to be available beyond the requirements of water use within the City limits and that such extension shall be the property of and subject to the control of the City.

B. Review. The City shall review the petition, including review by the Public Works Department, City Engineer and City Attorney. The Public Works Department shall determine what portion, if any, of the extension of the City's water mains to the City limits the City shall construct, and shall prepare a verified statement showing the whole cost and expense of making such an extension. Such costs and expenses shall include administrative and supervisory expenditures of the City, which shall in no event be deemed to be less than ten percent (10%) of the cost of materials and labor. Upon a finding by the City that the City has available water rights, water source capacity, and water distribution and storage facility capacity to serve the proposed development the application may be accepted.

C. Agreement. If the City grants the petition or any portion thereof, the petitioner and the City shall enter into an acceptable written water system extension agreement, which agreement shall be executed prior to the commencement of any work upon said extension.

D. Dedication. Upon compliance with all conditions and requirements set forth herein, petitioner shall convey to the City, free and clear of all liens and encumbrances, except for those specifically agreed to in writing by the City, and by conveyancing instrument acceptable to the City, the following:

1. Any extension of the City's main transmission system constructed by petitioner and donated to the City as provided herein, together with all necessary pipeline easements and rights-of-way for the operation, maintenance, repair and replacement of the same.
2. The internal subdivision distribution system and all appurtenant facilities specifically including but not limited to all distribution lines, pumps, storage facilities, booster pumps, and any required treatment facilities, together with

all appurtenant easements and rights-of-way for the operation, maintenance, repair and replacement of the same.

E. Reimbursement. The City shall have the right to allow third parties to connect to any water line or facilities constructed pursuant to this Section in which case the City may enter into an agreement providing partial reimbursement to the developer. As a condition of such reimbursement, the petitioner shall, prior to final approval and acceptance of the main extension by the City, submit to the City a verified list of costs which shall form the basis of the reimbursement agreement taking into consideration the benefit of the line to the petitioner.

4-03-320. Meter Installation and Maintenance.

It shall be unlawful for any person who is not authorized by the Public Works Department to open or connect into any City water main. Any person desiring to open or connect into the City water system shall obtain the appropriate permits required herein and all work performed under such permit shall be inspected by the City. Any person connecting to the water system shall install a connection pipe of suitable quality under the street and a meter box, meter, and stopcock at a location determined by the Public Works Department. Said connection pipe, meter box, meter and stopcock are and shall remain the property of the City, which retains the sole right to maintain, repair, and service said facilities. The City shall own and maintain the shutoff valve, the water meter and its appurtenances, regardless of whether the water meter was installed at the street or inside the structure receiving service.

4-03-330. Meter Required.

All water delivered by the City to its customers shall be metered through water meters owned and approved by the City. It shall be unlawful for any person, firm or corporation to use or have in their possession any water from the City water system that has not first been passed through and the quantity thereof measured by a City water meter.

4-03-340. Meter Accuracy.

Any user may submit a request for a test of his or her water meter. The Water Superintendent may, if under the circumstances it is deemed advisable, order a test of the requested meter measuring the water delivered to the user. If such request to test the meter is made within twelve (12) months after the date of the last previous test, the user may be required to pay the costs of such test if the meter is found to record from 97% to 103% of accuracy under methods of testing that are satisfactory to the Water Superintendent. In the event a meter is found to be recording less than 97% or more than 103% of accuracy, the City shall make such adjustments in the user's previous bill as are just and fair under the circumstances. If a meter fails to register at any time, the water delivered during such period shall be estimated on the basis of previous consumption. To the extent possible, the period of time used to assess previous consumption shall be a seasonally similar time period.

4-03-350. Meter Tampering.

Meters may be checked, opened, inspected or adjusted at the discretion of the City by City personnel. It shall be unlawful for any person other than authorized agents of the City to adjust, open, manipulate, disconnect or tamper with City water meters in any manner. A user shall prevent any damage to the water meter used by such user and shall be responsible for the cost of repairing any damage to the water meter other than normal wear and tear.

4-03-360. Illegal Use of Water Pressure.

The water provided through any connection to the City water system shall not be used for the purpose of driving any motor, siphon, turbine, or other wheels, or any hydraulic engines, or elevators, or for driving or propelling machinery of any kind whatsoever.

4-03-370. Unauthorized Service.

It shall be unlawful for any person to provide oneself or others with, or to make use of water service from the City water system without prior authorization from the City and payment therefore as herein provided. It is unlawful for any person to restore discontinued water service by self-help or other means without authorization by the City. Regularly applicable charges shall be assessed for unauthorized water service and may be collected as provided in this Chapter.

4-03-380. Unauthorized Connection.

It shall be unlawful for any person, directly or indirectly, to connect to, disconnect, repair or alter the City water system or any part thereof, including, but not limited to, any water line or water meter, without prior authority obtained from the City in accordance with the provisions of this Chapter. It shall be unlawful for any person, directly or indirectly, to open any fire hydrant, stopcock, valve, or other fixtures attached to the City water system without prior authority obtained from the City in accordance with the provisions of this Chapter.

4-03-390. Damage to Water System.

A. Prohibited. It shall be unlawful for any person to destroy, deface, damage or interfere with the operation of any part, pipe, fixture, appliance, appurtenance or property of the City water system or any source of water supplying to said system, to interfere with the flow or control of distribution of the water system, or to pollute, contaminate or introduce into such system any substance poisonous to human life or harmful to human health or detrimentally affecting the taste, smell, color, odor, or other aesthetic characteristic of the City water system.

B. Restitution. All damages or injury to the water, lines, meters or other equipment of the City water system caused by any act or neglect of the user or his or her agents or any violation of this Chapter shall, in the discretion of the City, be repaired by or at the expense of the user, and the user shall pay all costs and expenses, including reasonable attorneys' fees, which may arise or accrue to the City through its efforts to repair or recover expenses for the repair of the damage to the water, lines, meters or other equipment of the City water system or Public Works Department.

4-03-400. Emergencies.

Notwithstanding the provisions of this Chapter, in the case of leaks or other accidents damaging service laterals or other apparatus connected with the water system, plumbers or other qualified persons may shut off the water at the curb box to make the necessary repairs, and turn on the water upon completion of such repairs without obtaining authorization.

4-03-410. Waste Prohibited.

All users of water service shall be required to keep their sprinklers, faucets, valves, hoses and all apparatus connected to the water system in good condition at their own expense and all waterways closed when not in use. No person, unless authorized by the City in accordance with this Chapter, shall turn on or discharge water from any fire hydrant, and no water user or other person shall waste water or allow it to be wasted by imperfect stops, taps, valves, leaky joints or pipes, or to allow tanks or watering troughs to leak or overflow, or to wastefully run water from hydrants, faucets, basins, sinks, or other apparatus, or to use any water from the water system except for culinary and domestic purposes, including lawn sprinkling, unless so authorized by the City, or to use the water

for purposes other than those for which he or she has paid, or use water in violation of the rules and regulations adopted by the City Council.

4-03-420. Sprinklers.

All sprinkler systems shall comply with applicable provisions of the Plumbing Code, as adopted and amended by the City, and shall only be allowed in connection with other secondary water service provided to the premises. It shall be unlawful for any person to install or use a sprinkling system which materially affects the pressure or supply of water in the City water system or any part thereof. (Ord. 12-07)

4-03-430. Curtailment.

Water shall be supplied first for culinary purposes. In times of water scarcity, the Mayor may, by proclamation, declare a water emergency and limit, ration, or otherwise regulate the distribution or use of water to such extent as may be required for public good of the City. Such action of the City may include, but shall not be limited to, limiting the use of water for lawn sprinkling or imposing a moratorium on new water connections until the emergency has been alleviated.

4-03-440. Turning Water Off.

If any water user shall waste water, or shall, within two (2) days after notice is given by the Public Works Department, fail to repair any service connection or plumbing on his or her premises, or fail to comply with any regulations or restrictions with respect to the use of water, he or she shall be liable to have the water shut off from his or her premises by the Public Works Department. Upon the occurrence of any of the foregoing, the Public Works Department shall notify the occupant of the premises and the owner thereof in writing, by personal delivery or certified mail, return receipt requested, of the violation and that the water service will be discontinued if the violation is not remedied within three (3) days. If the violation is not remedied within the required time frame after service of the notice of discontinuance, the Public Works Department shall cause a notice to be left on the property explaining the reason for discontinuance, and the water service may thereafter be discontinued. If water is turned off because of defective plumbing or waste as provided herein, the water shall not be turned on again until the same have been repaired in accordance with the requirements of the Public Works Department, and a fee has been paid for shut off, turn on and inspection as set forth by resolution in the City Consolidated Fee Schedule.

4-03-450. Cross Connections.

A. Generally. This Section shall be known as the "Syracuse City Cross Connection Ordinance," and may be so cited. The purpose of this Section is to protect the public potable water supply from contamination or pollution by isolating within its customers' internal distribution system(s) or its customers' private water system(s) such contaminants or pollutants which could backflow or back-siphon into the public potable water supply system. This Ordinance is adopted pursuant to Section R309-105 of the Utah Safe Drinking Water Rules and Regulations. (Ord. 12-07)
B. Requirements. No water service connection to any premises within the City shall be installed or maintained unless the water supply is protected. Unprotected cross connections shall not be an integral part of any consumer's water system within the City. In the event a cross connection cannot be eliminated, it must be protected by the installation of an air gap or approved backflow prevention assembly/device in accordance with the provisions set forth herein and indicated in the City Standards and Specifications. (Ord. 12-07)
C. Responsibilities. It shall be the responsibility of the consumer to purchase, install or cause to be installed, test and maintain any backflow prevention assembly/device

required to herein. It shall be the responsibility of the City Public Works and Building Departments to administer and enforce the provisions of this Section to ensure compliance herewith.

D. Compliance. All connections to the City water system and backflow prevention devices required herein shall conform to the provisions of this Section, the Plumbing Code, as amended and adopted by the City, the Utah Safe Drinking Water Act, and other relevant provisions of the *Utah Code Annotated*, as amended.

E. Enforcement. Service of water to any building or location, in the discretion of the City, may be discontinued if a backflow prevention assembly required by this Section is not installed, tested, and maintained, if a backflow prevention assembly has been removed or by-passed, or if an unprotected cross connection exists at the building or location. In addition, water service may be terminated to any building or location when the Public Works Director or Building Official determines that the service connection's water usage constitutes a sufficient hazard or risk to the water supply or to the City's water system. The City shall give reasonable notice to the customer and/or owner of the building or location of the termination of water service to a building or location, and where the consumer could not reasonably be so notified before termination, then notice shall be given promptly afterwards. Service will not be restored until such conditions or defects are corrected to the requirement of this Section and the satisfaction of the City.

F. Record Keeping. Officers and employees of the Public Works Department and the Building Department shall report all installations of backflow prevention devices, assemblies and methods of cross connection correction installed by or communicated to them to the Public Works Director or his or her designee. The Public Works Director, or his or her designee, shall maintain or cause to be maintained an inventory of all said assemblies, as well as test and repair records on all such assemblies, and shall be responsible for notifying customers of annual testing requirements or other enforcement requirements.

G. In addition to the provisions of this Ordinance, the City Council is hereby authorized to adopt Rules and Regulations and policies relating to the prevention of cross-connections. (Ord. 12-07)

4-03-460. Maintenance and Control of Hydrants.

Fire hydrants are the property of the City and are under the control of and shall be kept in repair by the Public Works Department.

4-03-470. Tampering with Hydrants.

Fire hydrants shall not be tampered with and no one shall use, adjust, alter or change any fire hydrant except the Public Works Department or persons duly authorized by the City. It is unlawful for any person, other than those duly authorized, to open or operate any City fire hydrant or to tamper or interfere with or attempt to draw water therefrom, or in any way to obstruct the approach thereto.

4-03-480. Hydrant Use by City Departments.

Duly authorized fire protection personnel shall at all times have free and unrestricted access to all fire hydrants. In the event of a fire within the City, a fireman, policeman, or employee of the Public Works Department may order that all valves, taps, and stopcocks connected to the plumbing systems of any property supplied with water service by the City be closed and remain closed until the fire is extinguished. Other City Departments or agencies may use fire hydrants with the approval of the Public Works Department.

4-03-490. Private Use of Fire Hydrant Water.

The private use of City fire hydrants for obtaining water is discouraged and shall be used as a measure of last resort and all other means of obtaining water for construction

purposes, dust control and other private uses must be explored and used whenever possible. Any private use of fire hydrants shall require a permit as provided herein.

4-03-500. Fire Hydrant Water Use Permit.

A. Permit Required. Any person or entity desiring to obtain water from a City fire hydrant shall submit an application for a Fire Hydrant Water Use Permit on forms provided by the City to the Public Works Department. The application shall be signed by the applicant or applicant's authorized and certified agent, and shall state the purpose for which the water is to be used, the location of the intended fire hydrant to be used, and the desired term of the permit, not to exceed thirty (30) days. Applicants must agree to and abide by all conditions, charges and liabilities of the permit.

B. Fees. Each application for a Fire Hydrant Water Use Permit shall be accompanied by the required permit fees as set forth in the City Fee Schedule. No permit shall be issued until the proper fees have been paid to the City. Unless otherwise provided, the permit and fees required herein shall be in addition to any and all other licenses, permits and fees imposed by any other ordinance, regulation or law.

C. Issuance of Permit. The Water Superintendent shall review all applications for Fire Hydrant Water Use Permits and may issue or deny such applications based upon consideration of the effect of the proposed use, the location of the hydrant, the availability of water from the system, assurance that the use of the hydrant(s) will not adversely affect delivery of water to existing connections to the City water system, and compliance with all conditions and requirements of this Chapter. Permit terms may not exceed thirty (30) days. Permits shall be valid only for the applicant for whom it was issued and only for the location and use for which it was issued and shall not be assignable or transferable.

D. Water Meter. Upon issuance of a Fire Hydrant Water Use Permit and payment of all required fees and deposits, the permit holder shall obtain a meter and other required equipment from the Public Works Department necessary to obtain and meter the water drawn from the hydrant in accordance with the permit. A deposit shall be required for the use of the meter and other equipment provided by the City in an amount set forth in the City Fee Schedule in order to insure return of the meter and equipment in good condition. The meter number and reading shall be noted on the permit at the time of issuance.

E. Payment. Upon completion of the use of fire hydrant water or expiration of the permit, whichever is sooner, Applicant shall return the meter and other equipment provided by the City and pay the appropriate fee in accordance with the rates set forth in the City Fee Schedule for the amount of water used as indicated on the returned meter. In the City's discretion, the City may require an applicant to pre-pay for the good faith estimate of the amount of water to be used at the appropriate rate set forth in the City Fee Schedule. Upon completion of the use of fire hydrant water or expiration of the permit, actual water usage shall be determined and the Applicant shall pay to the City any deficiency in water fees owed. All fees, deposits and payments shall be submitted to the City Office for receipt and remittance. (Ord. 12-07)

F. Inspection. The City reserves the right to supervise and/or inspect the use of any City fire hydrant in accordance with any permit issued hereunder. Applicant shall close the hydrant and disconnect the meter from the hydrant when not using the water, thereby leaving the hydrants free and clear for use by the fire department and City officials.

G. Free Access. No private use of City fire hydrants as permitted herein, may interfere with the use of any fire hydrant by City officials, and the fire department shall at all times have free access to all fire hydrants.

H. Records. The Public Works Department shall keep a record of all permits issued

hereunder, including the name of the person to whom the permit was issued, the term of the permit and the fees and deposit collected.

I. Rules and Regulations. The Public Works Department may establish and adopt, with the advice and consent of the City Council, rules and regulations governing the use of City fire hydrants and permits for the same.

J. Indemnification. Applicant shall be responsible for returning the meter and equipment to the City in good condition when due. A late fee may be charged for any meter or equipment which is not returned to the City within twenty-four (24) hours from the expiration of the permit as provided in the City Fee Schedule. Applicant shall be responsible to reimburse the City for the cost to replace any meter or equipment not returned and shall be liable for any and all damage to the City fire hydrant(s) or equipment in connection with applicant's use of the hydrant. Applicant shall further indemnify and hold harmless the City, its officers, employees, agents and sureties, from liability of any kind or nature which may result from use of the hydrant, meter, equipment or water as permitted herein.

K. Revocation. Any Fire Hydrant Water Use Permit issued hereunder may be revoked or suspended by the City upon applicant's failure to comply with the rules and regulations of the Public Works Department and the ordinances of the City governing the use of water from City fire hydrants. Prior to revocation of any permit, proper notice and an opportunity to be heard shall be provided to the permit holder.

L. Appeals. Any person aggrieved of the denial or revocation of a Fire Hydrant Water Use Permit may appeal such decision to the City Council by filing written notice of appeal within fifteen (15) days from the date of the decision.

4-03-510. Secondary Water Connection.

A. New Residential Buildings. All new residential building sites shall be served by pressure irrigation in accordance with the City Subdivision Ordinance. No new building permits will be issued until the applicant has made arrangements to connect to an irrigation water system. Each owner shall extend to the pressure irrigation system and provide a connection for the building site concurrent with construction of the residence.

B. Existing Residential Buildings. All owners of existing residences having access to pressurized irrigation systems are encouraged to connect to such systems for all outside watering.

4-03-520. Wellhead Protection.

In order to protect ground water sources that supply water to the City potable water system, the City shall adopt a Wellhead Protection Ordinance set forth in the City Zoning Ordinance restricting land use and development within the vicinity of any well that supplies potable water to the City water system in order to protect such areas from urban development which may cause pollutants to be discharged into the ground water supply. All development within the City must comply with the provisions of the Wellhead Protection Ordinance.

4-03-530. Penalty.

Unless otherwise specifically provided, any person who violates any provision of this Chapter shall be guilty of a Class B misdemeanor and shall be subject to fines and/or imprisonment as provided in *Utah Code Ann.* §§ 76- 3-301 and 76-3-204, as amended. In instances where the violation is a continuing violation, a separate offense shall be deemed committed for each day in which the violation occurs or continues. This Section shall not limit the authority of any court of competent jurisdiction to impose any other sanction or order any other relief as may be appropriate under the laws of the State of Utah. (Ord. 12-07)

4-03-540. Board of Equalization.

The City Council is hereby designated as the board of equalization of water rates to hear complaints and make corrections of any assessment alleged to be illegal, unequal or unjust. All complaints shall be filed in writing to the City Recorder and shall state the grounds for the complaint.

CHAPTER 4

IRRIGATION WATER AND NATURAL WATER COURSES

4-04-010. Prohibited Uses of Non-Potable or Irrigation Water

4-04-020. Damming or Obstructing Water Course or Stream

4-04-030. Permit Necessary for Culvert or Other Obstruction

4-04-010. PROHIBITED USES OF NON-POTABLE OR IRRIGATION WATER. It shall be unlawful for any person, firm or corporation to:

(A) Use or cause to be used any untreated or non-potable water from a pressure irrigation system for other than irrigation purposes.

(B) Interconnect or cause to be interconnected the potable and non-potable portions, distribution systems or service lines of dual water supplies or extensions thereof.

(C) Install or cause to be installed in the same trench or trenches the distribution or service lines of potable and non-potable water.

(D) Connect or cause to be connected a service line to any distribution system or main line carrying non-potable water without authority of Syracuse City or employee having jurisdiction of the non-potable water supply.

(E) Extend or cause to be extended into any building a non-potable water supply system or service line.

(F) Connect or cause to be connected to any fire hydrant, a non-potable water supply or service line.

(G) Expose or cause to be exposed any portions of a non-potable water supply or extensions or service lines thereof without identifying the same by distinctive coloring or other suitable means sufficient to distinguish the same from potable water supply systems, extensions, or service lines. (Ord. 12-07)

(H) Contaminate or cause to be contaminated any source of supply, distribution system, or service line furnishing or carrying non-potable water or potable water. (1971) (Ord. 12-07)

4-4-020. DAMAGING OR OBSTRUCTING WATER COURSE OR STREAM. It shall be unlawful for any person to place, replace, or maintain any dam or other obstruction of any kind in the channel of any natural or artificial water course or living stream within the limits of the City of Syracuse so as in any way to interfere with or impede the flow of the irrigation supply stream.

CHAPTER 5

PRESSURE IRRIGATION WATER SERVICE

4-05-010. Schedule of Rates and Charges CHANGE ALL TO CHAPTER 5
4-05-020. Connection Fees
4-05-030. Due Date of Service Charges
4-05-040. Due Date of Connection Fee
4-05-050. Application for Water Service
4-05-060. Permits and Reports
4-05-070. Regulations
4-05-080. Fixtures and Fittings used in Water Connections
4-05-090. Use Without Payment Prohibited
4-05-100. Discontinuance of Service if Payments Delinquent
4-05-110. Turning on Water Without Authorization
4-05-120. Taker Only to Use Water
4-05-130. Waste Prohibited

4-05-010. SCHEDULE OF RATES AND CHARGES. The City Council shall, by Resolution establish such rates for the provision of pressure irrigation services as appropriate and necessary.

The pressure irrigation water service shall not be used to irrigate any area exceeding 1.0 acre or for any lot on which the principle building has not been constructed. (Ord. 02-15)

4-05-020. CONNECTION FEES: The City Council shall, by Resolution, establish such rates for the connection to the pressure irrigation water system of the City. Rates shall be based on the size of the connection.

Any special connections shall have fees set by the City Council in each individual situation.

Any applicant for a pressure irrigation water connection to any lot or property abutting a street, alley, or other right-of-way containing a pressure irrigation line shall pay the full connection fee therefore. (Ord. 01-14)

4-05-030. DUE DATE OF SERVICE CHARGES. Payment of all rates and charges accruing shall be made to the City at the same time as payments are due and payable for culinary water service furnished by the City, and shall accrue for all pressure irrigation water services available after September 30, 1984, regardless of whether irrigation water or irrigation water distribution lines are then available to the properties so charged. (1984) (Ord. 12-07)

4-05-040. DUE DATE OF CONNECTION FEE. Payment for the water connections accruing shall be made in full prior to the connection to the pressure irrigation lines; provided, however, that upon signing of a Time Payment Agreement, the City may allow installment payments of the connection fee over a one-year period from the date of application for service. (1984) (See Resolution R89-13) (Ord. 12-07)

4-05-050. APPLICATION FOR WATER SERVICE. Any person desiring to secure pressure irrigation water when such service is available, shall apply to the City and file an agreement with the City which shall be in substantially the following form:

WATER APPLICATION AND AGREEMENT

Application is hereby made by the undersigned to Syracuse City for a pressure irrigation water connection for property owned by the undersigned and identified as _____

In making said Application the undersigned agrees:

1. That undersigned will pay a connection fee of $_____ to the City upon approval of this Application, or in installments as determined by agreement with the City.

2. Undersigned will pay for all water and services afforded by the City at the lawfully established monthly rates as may from time to time be established by the City Council of Syracuse.

3. Undersigned will abide by and obey all lawful rules and regulations of the City which may be adopted from time to time.

4. Permission is hereby granted in consideration of accepting of this Application to the City and its agents, to enter the property of Applicant to install, maintain, and/or replace appurtenant works.

5. In the event undersigned becomes delinquent for more than 30 days in the payment of the monthly service charge, undersigned will pay the reasonable cost (whether suit is filed or not) of collecting the arrearages, including a reasonable attorney's fee, and also agrees that undersigned's pressure irrigation and culinary water service may both be discontinued until payment of such arrearages has been made.

Dated this _____ day of _____.

IN WITNESS WHEREOF, the undersigned has caused this Application and Agreement to be executed as of the day and year above written.

_____

ACCEPTED: _____
SYRACUSE CITY

By_____

When Applicant is not the actual owner but is merely buying served premises under Contract, or when the Applicant is a building contractor applying for new water service, claiming to be the owner of the property, the City may require a deposit in the amount of $_____ to guarantee payment of all such water service.

Applications for water service to premises occupied by a tenant shall be made by the owner of the premises, who shall be responsible for payment of all water service thereto. (1984)

4-05-060. **PERMITS AND REPORTS.** It shall be unlawful for any person to make any extension of any pipe or connect any fixture to the pressure irrigation distribution system for any purpose whatsoever without first obtaining permission from the Syracuse City Water Superintendent. All persons must, within 24 hours after the completion of any plumbing

work connected with the water system, report the same to the Water Superintendent. (1984)

4-05-070. **REGULATIONS.** The City Council shall establish by Ordinance or Resolution such regulations controlling and governing the pressure irrigation water system of the City, the manner of making such connections, and other regulations as may be necessary for the operation of the water system. (1984)

4-05-080. **FIXTURES AND FITTINGS USED IN WATER CONNECTIONS.** It shall be unlawful for any person to use any kind or size of fitting, pipe, valves , or other equipment in connection with the pressure irrigation distribution system, except the kind prescribed by the City Public Works Department. (1984) All connections made to the cities stop valves are required to be installed with an owner valve in close proximity to the supply valve. The connection to the cities stop and waste valve is the termination point of the Cities responsibility for care and maintenance. Use of the Cities stop valve is strictly prohibited unless closing the valve is necessary to prevent flooding or property damage. The city recommends all users install a filter following the owner valve.

4-05-090. **USE WITHOUT PAYMENT PROHIBITED.** It shall be unlawful for any person by himself, family, servants, or agents to utilize the City pressure irrigation water system without paying therefore as herein provided, or without authority to open any, valve, or other fixture attached to the system or water supply, or to in any way injure, deface, or impair any part or appurtenance of the system or to cast anything into any reservoir or tank belonging to said system. (1984)

4-05-100. **DISCONTINUANCE OF SERVICE IF PAYMENTS DELINQUENT.** The City shall mail a written statement to each user of the pressure water service once each month, or at such other regular intervals as the City Council shall direct. Said statement shall specify the amount of the bill for the pressure irrigation water service used and the place of payment and date due. If any person fails to pay the charges within 30 days of the due date, the City shall so notify the Water Department and shall have authority to direct said Department to shut off all water service, both pressure irrigation and culinary, to the premises involved. Before said service to the premises shall again be provided, all delinquent water charges must be paid to the City, together with such disconnection and re-connection charges as may be established by resolution of the City Council. The City is hereby authorized and empowered to enforce payment of all delinquent water service charges by an action at law in the corporate name of the City. (1990) (Ord. 12-07)

4-05-110. **TURNING ON WATER WITHOUT AUTHORIZATION.** It shall be unlawful for any person, after the water has been turned off from his premises on account of non-payment of rates or other violation of the rules and regulations pertaining to the water supply, to turn on or allow the water to be turned on or used or allow the water to be used.. (1984)

4-05-120. **TAKER ONLY TO USE WATER.** It shall be unlawful for any water user to permit any person from other premises, or any unauthorized persons, to use or obtain water regularly from his premises or water fixtures. (1984)

4-05-130. **WASTE PROHIBITED.** It shall be unlawful for any pressure irrigation water user to waste water, or to allow it to be wasted, by imperfect stops, taps, valves, leaky joints or pipes, or to allow tanks or watering troughs to leak or overflow, or to wastefully run water from hydrants, faucets, or valves, or other apparatus, or to use water in violation of the rules and regulations for controlling the water supply.(1984)

CHAPTER 6

CEMETERY REGULATIONS

4-06-01 Definitions
4-06-02 Cemetery Name
4-06-03 Office of Sexton
4-06-04 Duties of Cemetery Sexton
4-06-05 Sale of Burial Rights
4-06-06 Transfer of Burial Rights
4-06-07 Interments
4-06-08 Disinterment
4-06-09 Abandonment
4-06-10 Conduct
4-06-11 Cemetery Hours
4-06-12 Monuments and Markers
4-06-13 Decorations of Graves
4-06-14 Perpetual Care
4-06-15 Penalty

4-06-01 Definitions

CEMETERY: The term "Cemetery" shall mean any Cemetery owned and/or maintained by the City for the purpose of receiving the remains of deceased humans.

Cemetery Office: The term “Cemetery Office” shall mean the Public Works Office maintained at, 3061 South 2400 West, Syracuse, Utah 84075.

Certificate: The term “Certificate” referred to herein shall mean Burial Right Certificate.

City: The term “City” shall mean Syracuse City, Utah.

Certificate Holder: The term “Certificate Holder” is intended to mean and shall be construed to mean owner of purchaser of burial rights and privileges, or the collateral right of use of any burial plot, evidenced by a Burial Right Certificate or by proved and recognized descent or devise from the original owner.

LOT: The term "lot" shall include partial lots or single graves in the City Cemetery.

Marker: The term “Marker” means a headstone flush with the surface of the ground made of granite, marble, and metal surfaces.

Monument: The term “Monument” shall include tombstone or headstone of granite, marble, or metal substances which shall extend above the surface of the ground at least twelve inches (12”) in height or higher, but not exceeding four feet (4’).

Mow Strip: The term “Mow Strip” shall refer to the six (6) inch concrete strip around the monument or marker.

PERSON: The term "person" shall mean individual, group, partnership, firm, corporation, or association.

Responsible Party: The term “Responsible Party” shall refer to any person selected by the family of the deceased to act in its behalf and can include the heir apparent, religious leader, mortician, funeral director, or any other person the family selects in choosing graves, making available information on the deceased party, and taking full liability for the family obligations concerning the services performed on the Cemetery’s property.

RESIDENTS: Any person currently residing within the incorporated limits of Syracuse City, or any person owning property within the incorporated limits of Syracuse City, or any person who resided within the incorporated limits of Syracuse City immediately prior to being placed in a health care institution.

SEXTON: The term "sexton" shall be an individual appointed by the Mayor with the advise and consent of the City Council and whose duties are described within this Chapter. (Ord. 12-07)

WORDS: Single words shall include the plural and masculine words shall include the feminine and neuter.

4-06-02 **CEMETERY NAME.** The burial ground of Syracuse City shall be known and designated by the name of Syracuse City Cemetery.

4-06-03 **OFFICE OF SEXTON.** There is hereby created the office of City Sexton which office shall be filled by appointment of the Mayor, with the advice and consent of the City council.

4-06-04 **DUTIES OF CEMETERY SEXTON.**

(1) It shall be the duty of the Cemetery Sexton, or his/her representative, to supervise, manage, operate, maintain and improve the Cemetery in accordance with the provisions of the City ordinances and the rules and regulations adopted by the City Council.
(2) It shall be the Cemetery Sextons duty to keep a true and correct record of all burial plots.
(3) The Cemetery Sexton, or his/her representative shall direct all interments, disinterment, and marking for monuments or markers in the Cemetery.
(4) The Cemetery Sexton shall direct all funeral corteges while in the boundary of the Cemetery as deemed necessary.
(5) The Cemetery Sexton shall approve all claims chargeable against the Cemetery. The Cemetery Sexton shall provide such information to the City Manager or City Council as may require.
(6) The Cemetery Sexton shall employ such help as required to carry out the duties prescribed by the City ordinances and the rules and regulations adopted by the City Council.
(7) The Cemetery Sexton shall have the authority to announce additional regulations when necessary, with the approval of City Council.
(8) Any person or firm desiring to perform work within the cemetery must first secure the approval and written permission of the Sexton. All settings of vases, markers and monuments and all plantings of trees, shrubs and flowers must be approved by the Sexton be for the work is commenced and all work shall be performed under the direction of the Cemetery Sexton or his/her representative.
(9) It shall be the duty of the Cemetery Sexton to remove floral pieces or displays left on any grave when he/she deems necessary.

4-06-05 **SALE OF BURIAL RIGHTS**

(1) The Cemetery Sexton or his/her representative shall be the registrar of burials for the City, and before burying any dead in any city-owned Cemetery within the city limits, the relatives or other persons having charge of said body shall be required to furnish to the Sexton or representative, a statement of which shall include the name of the person deceased, when and where born, if known, the date of death and cause thereof. Also, the initial letter with information of the plat, as well as the number of block, lot and position where person is to be buried.

(2) No person who shall purchase the use of any grave site or lot for burial purposes within the city cemetery shall sell such position or lot to any buyer except the city.

(3) The city hereby agrees to buy back the any lot which it may hereafter sell. The price in which the city buys back a lot shall be the exact price the owner paid. In no event shall the city pay more nor less that what the lot was originally purchased for.

(4) The sale of every lot is a right to burial. The lot or grave site owner does not own the ground in which the person is said to buried in. The use of every lot or single grave site sold is subject to the rules and regulations that may be hereafter adopted and to such changes of the present rules as are found necessary for the protection of lot owners and the remains of the dead, and any such sale shall cover the use of such lot or grave site for burial purposes only. In the event of an emergency the sexton has the sole right to move lot or grave site owners to other unoccupied lots without reimbursement from the city.

4-06-06 **TRANSFER OF BURIAL RIGHTS**

(1) Where ownership to a purchased lot is to be transferred, the original deed shall be cancelled and the record so corrected. A transfer fee, as set by the resolution of the City Council shall be paid to the City Sexton for such service.

(2) Whenever ownership to purchased lots reverts to the City, the original deeds shall be filed with the City Sexton, and before new deeds are issued covering said property, the original deed shall be cancelled or quit claim deed given and the record so changed.

4-06-07 **INTERMENTS**

(1) There shall be no interment of anything other than the remains of human bodies in City Cemetery and no interment of any deceased human shall be made in any other place than within cemeteries devoted to that purpose.

(2) No person, except the certificate holder of a lot upon which interment is to be made, shall use the plot or lot in the Cemetery, without first obtaining written permission from the certificate holder of said lot, or nearest relative of the certificate holder thereof.

(3) Funeral directors must schedule the use of the cemetery, have the interment work order signed, and have fees paid in full before arrangements with the family are concluded.

(4) The human remains must arrive to the cemetery before 3:00 p.m. (November 1 to April 30) and at or before 4:00 p.m. (May 1 to October 31) for interment if the grave is to be filled in with earth the same day.

(5) There shall be no interments on Sundays or the legal holidays of New Years Day, Memorial Day, Independence Day, Pioneer Day, Thanksgiving Day, and Christmas Day.

(6) No person shall be buried in the City Cemetery unless the casket shall be placed in a reinforced concrete, steel or other vault approved by the City Sexton.

(7) Saturday services will be charged an additional fee as set for by the City Council in addition to the standard interment fee.

(8) It shall be unlawful to bury the body of any person within the limits of the city, except in public or private cemeteries located therein, unless special permission by the City Council.

4-06-08 **DISINTERMENT**

(1) No person shall disinter any human remains in the cemetery, except under the direction of the Sexton. All disinterments shall comply with applicable State law.

(2) Before disinterring any remains of any person who has been buried in the Cemetery, the relatives or other person having charge of said remains shall be required to furnish in writing the Cemetery Sexton or his/her representative a request for disinterment which shall include name of deceased, when and where they were born, when and where death occurred, initial letter of the plat, as well as the number of block or lot where said person is buried, together with the name of the mortuary and those persons responsible for the said disinterment.

(3) The City assumes no responsibility whatsoever for the condition of any casket or vault involved in any removal.

4-06-09 **ABANDONMENT**

(1) The City may reclaim any unused burial site which has been unused for burial purposes for more than sixty (60) years, and during the sixty (60) year period the owner has not given the municipality written notice of any claim or interest in the lot or parcels.

(2) Before a lot or any portion thereof shall be deemed to have been abandoned, the City Council shall set a time and place for hearing to determine the question of abandonment and shall:

(a) Cause a notice of the time and place of the hearing to be posted in a conspicuous place on the lot or portion thereof affected by said hearing at least 20 days prior to the date of the hearing.

(b) Cause a notice of said hearing to be published in at least one issue of a newspaper having general circulation in the City, said publication being not more than 30 days or less than 10 days prior to the date of said hearing.

(c) Cause a notice to be sent by certified mail to the last known address of each of the owners or users of said lot or portion thereof as shown by the City's records at least 20 days prior to said hearing,

At such hearing the City Sexton and others having information concerning the use made of the lot or portions of lots by said owner or owners shall attend and present evidence as to such use or uses, and the recorded owner or owners of said lot and/or their heirs and descendants and all other persons appearing on their behalf may offer such evidence of use as may bear upon the question of abandonment. All proceedings shall be informal, and the City Council shall determine whether or not the lot or lots, or portions thereof, have been abandoned and shall cause a notice of its decision to be sent to those persons requesting the same and who appeared at such hearing.

4-06-10 **CONDUCT**

(1) No loud, boisterous or turbulent noise of any kind which is deemed undesirable or interferes with the decorum of the cemetery will be permitted within the boundaries of the Cemetery.

(2) No alcohol beverage of any kind shall be permitted within the boundaries of the Cemetery.

(3) No person shall injure, deface, take, or carry away from any grave or lot any monument, marker, tree, shrub, flower, ground or ornament in the City Cemetery except with permission from the Sexton.

(4) It shall be unlawful for any person to erect or plant additions to the cemetery including but not limited to a fence, post, tree, shrub, monument or marker without permission of the Sexton.

(5) Placing of signs or notices of advertisements of any kind within the City Cemetery will not be permitted. (Ord. 12-07)

(6) No loitering or loafing on the grounds or around buildings will be permitted within the boundaries of the Cemetery.

(7) It shall be unlawful for any person to drive at a speed greater that fifteen (15) miles per hour in the cemetery.

(8) It shall be unlawful for any person to drive any vehicle over or across the lawn area or lot within the confines of the cemetery.

(9) No animals, except service animals, shall be allowed in any cemetery except in the confines of a vehicle and must at all times be retained within the confines of said vehicle while the vehicle remains in the cemetery. (Ord. 12-07)

4-06-11 **CEMETERY HOURS.** It shall be unlawful for any person to visit the Cemetery between the hours of one-half hour after sunset or one-half hour before sunrise without previous consent of the Cemetery Sexton.

4-06-12 **MONUMENTS AND MARKERS**

(1) It shall be unlawful for any person to erect or place any marker or monument on any lot in said Cemetery without approval of the Cemetery Sexton.

(2) The installation of all grave markers or monuments will be under the supervision of the Cemetery Sexton or designee. A notice to the Cemetery office by the Monument Company or responsible party must be made at least forty-eight (48) hours prior to the installation.

(3) All monuments and markers must comply with the following;

(a) A Monument can not exceed thirty six (36) inches in height.

(b) The combined width of the concrete strip and marker or monument shall not exceed forty two (42) inches of the burial plot (s) owned by the monument owner. (Ord. 12-07)

(c) Foundation of any monument or marker placed in the cemetery must have a concrete foundation six (6) inches or deeper.

(d) Monument or marker must be securely set with a concrete mow strip not less than six (6) inches wide around all sides of the marker.

(4) There shall be no other monuments, markers or structure placed upon any lot, except as provided in this chapter and with permission of the Sexton.

(5) The Cemetery and City accept no responsibility for loss or damage to any monument or marker unless such loss or damage is a direct result to negligence on the part of the City.

4-06-13 **DECORATIONS OF GRAVES**

(1) Fresh cut flowers and artificial flowers are permitted at any time if placed in a permanent vase located on the monument, and may be removed and discarded without notice when they become unsightly at the discretion of the sexton.

(2) All decorations including but not limited to balloons, craft items, figurines, pinwheels, potted live plants, shepherds hooks, and solar lights are not permitted during the mowing season which is April 1 to November 1, and may be removed and discarded without notice at the discretion of the sexton.

(3) Funeral flowers, floral pieces and decorations may be removed and discarded without notice when they become unsightly at the discretion of the Sexton.

(4) During the mowing season any item (s) placed on the mow strip or on the lawn may be removed and discarded without notice.

(5) A general cleanup (all flowers and grave decorations may be removed and discarded) may be done annually on:

(a) The first Monday in April.

(b) The Monday following Memorial Day

(c) The first Monday in November.

(6) The City claims no responsibility or liability, nor will accept any claims against it, for loss or destruction of personal property left in the Cemetery.

4-06-14 **PERPETUAL CARE**

(1) The City reserves the right to enter upon any grave and to perform all work necessary for the care and upkeep of all lots and graves in said Cemetery.

(2) General care shall be deemed to include general ground maintenance, and shall include, but not limited to, mowing, trimming, removing dead flowers, trimming trees and shrubbery when necessary, but shall not include repairing or replacing monuments of any nature, except when the need for repair or replacement is directly caused by the city.

4-06-15 **PENALTY.** Violation of this shall constitute a class B misdemeanor.

CHAPTER 7

CITY PARKS AND TRAILS

4-07-010: **Parks and Trails Defined**
4-07-020: **Authority to Establish**
4-07-030: **Care of Parks and Parks Facilities**
4-07-040: **Alcoholic Beverages, Drugs or Gambling**
4-07-050: **Open fires**
4-07-060: **Nuisances**
4-07-070: **Motor Vehicles and Speed Limit**
4-07-080: **Signs and Advertising**
4-07-090: **Animals**
4-07-100: **Golf and Archery**
4-07-110: **Athletic Games**
4-07-120: **Personal Profit or Financial Gain**
4-07-130: **Hours of Closure**
4-07-140: **Park Availability**
4-07-150: **Entertainment and Similar Activities**
4-07-160: **Concessions**
4-07-170: **Park Reservations and Fees**
4-07-180: **Camping or Sleeping Overnight**
4-07-190: **Skatepark**
4-07-200: **Aquaculture Facilities**
4-07-210: **Trails**
4-07-230: **Equestrian Park**

04-07-010

A. **PARKS AND TRAILS DEFINED:** For purposes of this chapter, a "park" or "trail" shall be defined as real property owned, leased or controlled by the city and operated and maintained by the city, and set apart for the use of the general public, as developed ground primarily utilized for active and passive recreational uses and which is usually, or may be, planted with trees, lawns and other landscaping, and which may include within its boundary facilities for sports, entertainment, dancing, recreation, swimming or is planned for such future use.

B. **MULTI-USE OPEN SPACE DEFINED:** For purposes of this Chapter “multi-use open space” shall be defined as real property owned, leased or controlled by the City and operated and maintained for a primary purpose which is utility or health and safety related, but which also provides incidental recreational use. A multi-use open space is not a park or a trail.

4-07-020: **AUTHORITY TO ESTABLISH:** The City Council may establish such reasonable rules and regulations as may be necessary for the use, control, management and protection of the public parks and trails and for multi-use open space.

4-07-030: **CARE OF PARKS, TRAILS AND MULTI-USE OPEN SPACE:**

A. In any park, trail or multi-use open space owned or operated by the city, it shall be unlawful to cut, break, move, take or otherwise injure, destroy or deface any trees, shrubs, plants, turf, rock or any building, fence, bridge, sign or other structure, or pollute any spring or stream.

B No person shall dump any earth, rubbish or other substance or material in or upon any park, trail or multi-use open space without written permission from the City.

C No person shall throw or deposit litter in any park, trail or multi-use open space within the City except in public receptacles and in such a manner that the litter will be prevented from being carried or deposited by the elements upon any part of the property or upon any street or other public place. Where public receptacles are not provided, all such litter shall be carried away from the property by the persons responsible for its presence and property disposed of elsewhere.

D. All persons and groups reserving facilities under this Chapter shall leave the property clean and in good repair. Persons violating this section may be barred from further reservation of the facilities, at the discretion of the city council.

E. It shall be unlawful to scratch, cut, injure or deface any of the buildings, fences, structures or other property or pollute any of the fountains, ponds or any other improvements; or to cut or injure flowers or flowerbeds within a park; to walk upon turf or seeded areas where posted; or for the owner of any dog to allow the same to run at large within the parks, trails or multi-use open space.

4-07-040: **ALCOHOLIC BEVERAGES, DRUGS OR GAMBLING:** The sale, consumption or possession of intoxicating liquors or beverages and dangerous or narcotic drugs, or gambling of any kind, is prohibited in all parks, and on all trails, and on multi-use open space properties of the City.

4-07-050: **OPEN FIRES:** No person shall make or kindle any open fire except in designated fireplaces, fire pits, and grills provided for this purpose or in private portable commercially manufactured grills. Grills provided for public use shall be on a first come, first served basis. After use, all coals shall be drowned, cooled and removed from the property.

4-07-060: **NUISANCES:** It shall be unlawful for any person to use threatening, abusive, insulting or indecent language; to commit any obscene or indecent act; to fight; or to create a public disturbance or nuisance in any park, trail or multi-use open space. Any person who loiters in a park, trail or multi-use open space under the influence of alcohol or drugs or who otherwise disturbs the peace of park users by begging, soliciting, making undue noise or engaging in disruptive activities shall be deemed to create a nuisance.

It is unlawful for any person or persons to create any nuisance or commit any offense that is in violation of state law or city ordinance or fail to obey the lawful directives and/or orders from any law enforcement officer or their designated city official.

4-07-070: **MOTOR VEHICLES AND SPEED LIMIT:** No person shall ride in or drive any motor vehicle upon any park, trail or multi-use open space except upon roads, parking areas or other hard-surfaced areas designated for motor vehicle operation. This shall not apply, however, to motorized equipment used within the property by officers or employees of the city, the Department of Wildlife Resources, or other county or state agency in the performance of their official duties. It is prohibited for any person to commit any act, by use or operation of any motor vehicle on any park, trail or multi-use open space, which if committed upon a public highway or street in the state, would be prohibited and unlawful.

A <u>Speed Limit</u>: Speed limits within all parks, trails or multi-use open space shall be fifteen (15) miles per hour unless otherwise posted.

B Manner of Operation: No motor vehicles shall be operated in a careless or reckless manner to such an extent that it will endanger the peace, health and safety of any other person or animal within the property.

C Parking: There shall be no parking at any time except in areas designated for such purposes. Abandoned vehicles shall be towed at owner's expense. No one shall test or repair any vehicle or mechanical device in any park, trail or multi-use open space.

4-07-080: SIGNS AND ADVERTISING:

(A) Regulatory Signs: Where signs have been posted under the direction of city officials on any city owned or city leased property regulating walking, entertainment, sports, use of vehicles, parking, instructions as to animals, fishing, swimming or containing other regulatory information, it is unlawful for any person to violate the provisions of such regulatory signs.

(B) Other Signs and Advertising: No person shall, without written permission of the parks' superintendent, erect, paint, paste or otherwise affix or distribute any signs, advertisements or circulars on parks, trails or multi-use open space. The sale of anything or the solicitation of funds or donations is forbidden, except upon written permission from the City.

4-07-090: ANIMALS: Except in the City's Equestrian Park, Horses, cattle, and livestock of any kind are prohibited in any park. Domestic animals, i.e., dogs, cats, on a leash no more than six feet (6') in length and under the control of a person may be brought into parks, trails and multi-use open spaces. It is unlawful for any person to hitch or fasten any animal to any tree, shrub, fountain, monument, lamppost or any other ornament growing or situated in any public street, public park or place within the corporate limits of the City. It is unlawful for any person to allow any animal under his control to stand near enough to any such trees or shrubs to bite, rub against or otherwise injure the same.

No Person shall annoy, interfere with, injure, release from confinement, or abandon any fowl, or animal, wild or domestic, in a city park or on a trail, or in multi-use open space.

No person shall set a trap or snare, or shoot, injure, or poison any wild animal or bird, or injure or destroy any nest except as authorized by an animal regulatory officer.

4-07-100: GOLF AND ARCHERY: Practicing, playing or using public park areas, trails or multi-use open spaces for golf and archery is prohibited.

4-07-110: ATHLETIC GAMES: Permits are required for using city property for organized athletic events. Permits will be issued by the City and shall not interfere with City sponsored athletics or other events. A valid permit shall be displayed upon request in order to avoid conflicts in the use of facilities. Persons failing to honor a valid permit may be denied future permits to use the facilities.

4-07-120: PERSONAL PROFIT OR FINANCIAL GAIN: Reservations for park areas or multi-use open spacesor facilities shall not be granted for personal profit or financial gain without written permission from the City.

4-07-130: HOURS OF CLOSURE:

A. It shall be unlawful for any person, minor or adult, to be on any city park or multi-use open space, parking lot or sidewalk within property boundaries during the hours of twelve o'clock (12:00) midnight and five o'clock (5:00) a.m. except as otherwise posted. The city shall reserve the right to lock any gate or chain any door offering access to any property or building in order to restrict nighttime usage thereof.

B. This Section does not apply to the following:

(1) An individual or group involved in a city-sponsored activity where a city employee or an agent of the city is present.

(2) In any areas that may be designated for overnight camping, provided those camping possess a permit therefore.

(3) By written permit; provided, that the possessor of the permit strictly complies with the requirements therein.

C. The City Manager or his designee may temporarily close or curtail activities upon any lands or waters, or any portions thereof, when it has been deemed to be in the best interest of public safety, conduct, health or order.

4-07-140: **PARK AVAILABILITY:** Park facilities and multi-use open spaces may be reserved for use any day between April 15 and October 15. The city reserves the right to withhold reservations for any given day during the period of availability for any City sponsored event or if the city determines there is necessary maintenance, cleanup, repair, or other work of an extraordinary nature that needs to be performed on any property or facility.

4-07-150: **ENTERTAINMENT AND SIMILAR ACTIVITIES:** No entertainment, demonstration, exhibition, meeting, concert or tournament, whether public or private, shall be given in any park, trail or multi-use open space without having obtained the written permission from the City.

4-07-160: **CONCESSIONS:** No person may sell food, drinks, or other items in the park, trail or multi-use open space except as may be permitted by special contract approved by the City.

4-07-170: **PROPERTY RESERVATIONS AND FEES.** In general, park, trail and multi-use open space usage is available on “first come, first served” basis. Planned events in which a reservation has been obtained shall have priority over events or uses that have not obtained a reservation.

(A) Reservations: Application for reservation of amenities may be made at the city office.

(B) Fees: A fee set by resolution shall be charged and collected at the time of reservation.

(C) Keys: Keys to reserved facilities may be picked up at the city offices on the last working day prior to the date of the reservation and returned on the first working day thereafter. A deposit shall be required and shall be forfeited if the key is lost or damaged. No such key shall be duplicated except by authorized city personnel.

4-07-180: **CAMPING OR SLEEPING OVERNIGHT:** Camping or sleeping overnight in city parks, trails or multi-use open space is prohibited without first obtaining a permit from the City.

4-07-190: **SKATEPARK:**

(A) In any skatepark facility owned or operated by the city of Syracuse, the use of bicycles of any type, scooters, similar devices, and motorized vehicles are prohibited.

(B) Persons riding a skateboard, or using roller skates, or in-line skates in a skatepark facility owned or operated by the city shall, without city supervision, skate at their own risk. The use of safety equipment including helmets, kneepads, elbow pads, and wrist guards is strongly recommended.

(C) Any person riding a skateboard, roller skates, or in-line skates in the facility shall exercise extreme caution, respecting the use of the facility by other skaters, and complying with all other city ordinances pertaining to public peace, morals, and welfare.

(D) It is unlawful for any obstacles, including ramps, rails, or similar equipment or material not constructed as part of the skatepark to be on the premises including, but not limited to, parking lots, sidewalks, grass areas, spectator areas, or other City property.

(E) It is unlawful for any user or spectator to not report any damage or hazardous condition to the City.

(F) It is unlawful for any person to organize events at the skatepark facility without prior written approval from the director of parks and recreation or his designee. The city reserves the right to organize, promote, sponsor, and rent the facility for special events and may preempt other scheduled events at its own discretion if necessary.

(G) It is unlawful for any person to skate in the skatepark before dawn and after dusk on any day. The facility shall be open to the public dawn to dusk unless otherwise posted. The operating schedule of the facility may be curtailed at the discretion of the city for inclement weather, special events, unforeseeable circumstances, or for repairs to the skatepark.

(H) Any person who fails or refuses to comply with the provisions of this section and who is injured while using the skatepark facility shall be deemed negligent.

(I) Any person failing to comply with the above stated rules and regulations is guilty of an infraction and subject to citation.

4-07-200: **AQUACULTURE FACILITIES:**

A <u>Fishing:</u> The use of any park with aquaculture facilities for the purpose of fishing must be in compliance with Title 23 of Utah Code Annotated (wildlife resources code of Utah), the rules and proclamations promulgated thereunder, orders issued pursuant thereto, and the provisions of this section.

(1) Ice Skating and/or ice fishing shall not be allowed on any lake, pond, reservoir or stream within an aquaculture facility.

B Swimming: Except by special permit issued by the City Council, no person shall swim, bathe or wade in the waters of any fountain, pond, lake or stream not set aside for the purpose of swimming, bathing or wading or pollute the waters of any fountain, pond, lake, reservoir, or stream in any public park or playground. Domesticated animals are prohibited from swimming in any city park aquatic facility.

This section shall not apply to rescue efforts or the care and maintenance of aquaculture facilities.

C Floatation Devices: Motorized Boats or Floatation Devices: No person shall ride in or drive any motorized boat upon any lake, pond or stream within said aquaculture facilities. This shall not apply, however, to motorized boats used within the park by officers or employees of the City or of the Department of Wildlife Resources in the performance of their official duties in the care and clean-up of the facilities. Self propelled boats, which are limited to small row boats (12 feet or less), float tubes, kick boats (pontoon boats), kayaks, paddle boats, and canoes will be allowed within said aquaculture facilities. In accordance with Utah Law, all boats are required to have at least one Type 1, 2, 3, or 5 U.S. Coast Guard approved personal floatation device (life jacket) of proper size, in serviceable condition, and each person aboard any boat shall wear a personal floatation device at all times. All personal floatation devices must be used in accordance with the age, weight, activity, and use restrictions listed on the U.S. Coast Guard approval label.

D Model Boating: No person shall engage in model boating in, on or upon the waters of any aquaculture facility in the city of Syracuse.

E Aquatic Animals: No person is to put in or around any lake, pond or stream any type of non-native or domesticated fish, frog, or any other kind of amphibian or aquatic animal including, but not limited to, goldfish, frogs, lizards, snakes, etc. (Ord. 06-05) (Ord. 06-21)

4-07-210: **TRAILS:** Trails may be established along specified corridors within the city from time to time by the city council designating areas as such trails. After initial establishment of any trail, the city council shall thereafter have the right to terminate such areas as trails upon majority of vote of the City Council. (Ord. 12-07)

Designated trails located within the city shall be maintained by the city. Such maintenance shall include mowing, watering and providing general maintenance to vegetation and facilities located within the designated trail areas pursuant to a maintenance plan and schedule determined by the city.

Trails established for pedestrian and non-motorized vehicle usage shall generally be subject to all parks regulations. To ensure the safety and enjoyment of citizen usage, protection of wildlife, and of the natural resources, the following restrictions shall apply to all trails within the City.

A. No horses or other equestrian animals shall be allowed on any pedestrian trail. All dogs, cats or other pets shall be on leash no longer than six (6) feet long.

B. No motorized vehicles shall be allowed except for medical and regulatory agencies, i.e., police, animal control, maintenance and construction vehicles approved by the City.

C. No Consumption of alcoholic beverages and/or drug usage, possession, or sale shall be allowed on any trail. It is forbidden to operate a bicycle under the influence of drugs or alcohol on any trail.

D.

E Cyclists riding two abreast shall not impede the normal movement of trail pedestrians and shall be subject to riding within a single lane. Cyclists shall maintain a safe speed along trails and shall be able to stop bicycles within 25 feet from a speed of 10 miles per hour on dry, level, clean pavement. Persons riding bicycles, skateboards, and roller blades shall yield to pedestrians.

F No marking, disfiguring, or tampering with the trail surface or its surrounding area shall be permitted without consent from the City.

G. All trail users shall obey Trail signs posted. No individual shall post signs upon any trail.

H No trail user shall, under any circumstance, be permitted to impede or obstruct a trail right-of-way.

4-07-220: **EQUESTRIAN PARK:** The City's Equestrian Park shall be used mainly for activities involving horses and other domesticated animals. The City shall govern the use of the Equestrian Park and may prohibit specific activity uses. In addition to regulations for all parks generally, the following regulations shall be enforced at the Equestrian Park:

A. The park may be used on a "first come, first served" basis unless prior reservations have been approved by an individual or group at the City Office.

B. Users of the Equestrian park shall assume full liability for injury or damages of any nature that may occur to animals, people or property while using the Equestrian Park and shall hold the City harmless from any and all incidents, injuries, damages or occurrences that may arise out of the use of the rodeo grounds, the conduct of users agents, employees or members of users organizations, the presence, movement or operation of users vehicles and/or trailers, and the animals present at the rodeo arena.

C. Users of the park shall not keep, maintain, or leave any personal property at the Park without the written consent of the City, and without paying additional fees as established by the City Council.

D No animals shall be allowed to run free outside of the Equestrian Park boundaries.

E. As with all other parks, possession, sale, or consumption of alcoholic beverages and dangerous or narcotic drugs, or gambling of any kind, is prohibited at the Equestrian Park.

F Use of the Park for Demolition Derbies is prohibited.

CHAPTER 8

ILLICIT DISCHARGE AND EROSION CONTROL

Administration and enforcement

4-08-010: Purpose
4-08-020: Definitions
4-08-030: Applicability
4-08-040: Administration
4-08-050: Severability
4-08-060: Ultimate Responsibility
4-08-070: Prohibitions
4-08-080: Illicit Discharges
4-08-090: Erosion Control on Construction Sites
4-08-100: Post Construction
4-08-110: Storm Water Design Criteria
4-08-120: Notice of Illicit Discharge
4-08-130: Enforcement, Violation and Penalties

4-08-010: **PURPOSE.** The purpose of this ordinance is to protect the health, safety and welfare of Syracuse City and its inhabitants by improving the City's storm sewer system, managing and controlling storm water run-off, protecting property, preventing polluted water from entering the City's storm water system and other receiving waters to the maximum extent practicable as required by federal and state law. The objectives of this ordinance are:

A. To regulate the contribution of pollutants to the City's storm sewer system by storm water discharges by any user;

B. To prohibit illicit connections and discharges to the City storm water system;

C. To guide, regulate and control the design, construction, use, and maintenance of any development or other activity that results in the movement of earth on land within the City;

D. To minimize increases in non-point source pollution caused by storm water run-off from development which would otherwise degrade local water quality;

E. To reduce the amount of storm water run-off, soil erosion and non-point source pollution, wherever possible, through storm water management controls and to ensure that these management controls are properly maintained and pose no threat to public safety;

F. To establish a viable and fair method of financing the construction management, operation and maintenance of the storm sewer system;

G. To establish legal authority to carry out all inspection, surveillance and monitoring procedures necessary to ensure compliance with this ordinance; and

H. To establish a penalty procedure for violation(s) of this code. (Ord. 06-06)

4-08-020: **DEFINITIONS.** For the purposes of this ordinance, the following shall mean:

Authorized Enforcement Agency: The City Public Works Director (PWD) and/or any individual designated by the PWD as an Authorized Enforcement Agent designated to enforce this ordinance.

Berm: An earthen mound used to direct the flow of run-off around or through a structure.

Best Management Practices (BMPs): Includes schedules of activities, prohibitions of practices, maintenance procedures, design standards, and other management practices to prevent or reduce the discharge of pollutants directly or indirectly into the waters of the United States. BMPs also include treatment requirements, operating procedures, educational activities, and practices to control plant site run-off spillage or leaks, sludge or waste disposal, or drainage from raw material storage.

City: Means Syracuse City, Davis County, Utah with associated jurisdiction.

Clean Water Act: The federal Water Pollution Control Act enacted by Public Law 92-500 as amended by Public Laws 95-217, 95-576, 96-483, and 97-117, enacted at 33 U.S.C. § 1251 et seq., and any subsequent amendments thereto.

Construction Activity: Activities subject to the National Pollutant Discharge Elimination System, (NPDES) Construction Permits. These include construction projects resulting in land disturbance of **one acre** or more. Such activities include, but are not limited to, clearing and grubbing, grading, excavating, and demolition.

Conveyance System: Any channel or pipe for collecting and directing the storm water.

Culvert: A covered channel or large diameter pipe that directs water flow below the ground surface.

Degradation: (Biological or Chemical) The breakdown of chemical compounds into simpler substances, usually less harmful than the original compound, as with the degradation of a persistent pesticide. (Geological) Wearing down by erosion. (Water) The lowering of the water quality of a watercourse by an increase in the amount of pollutant(s).

Detention: Storm water detention is temporary storage of a storm water runoff volume for subsequent release. Examples include detention basins, underground vaults, tanks or pipes, as well as temporary detention in parking lots, depressed grassy areas, etc.

Detention Basin: A depression to detain or slow down the flow of storm water until downstream facilities has sufficient flow capacity to handle the flow. A detention basin consists of an inlet, an outlet, the storage basin itself, and piping between. The intent of the design of the basin and its improvements are that it is to be designed and improved in such a way as to be an asset to the neighborhood and community.

Development: Any man-made change to the land, including but not limited to, site preparation, filling, grading, paving, excavation, and construction of building(s) or other structures.

Dike: An embankment to confine or control water, often built along the banks of a river to prevent overflow of lowlands; a levee.

Discharge: The release of storm water or other substance from a conveyance system or storage container.

Disturb: To alter the physical condition, natural terrain, or vegetation of land by clearing, grubbing, excavating, filling, building, or other construction activity.

Drainage: Refers to the collection, conveyance, containment, and/or discharge of surface and storm water run-off.

Drain Inlet: A point of discharge into a detention or retention basin, or pipe system, or ditch or channel.

Drain Outlet: A point of exit from a detention or retention basin, or pipe system, or ditch or channel.

Erosion: The wearing away of land surface by wind, water, ice, gravity, or mechanical processes, including vehicular traffic. Erosion occurs naturally from weather or run-off but can be intensified by land-clearing practices related to farming, residential or industrial development, road building, clearing of vegetation, or recreational activities including OHV use, hiking, equestrian, etc.

Fill: A deposit of earth material placed by artificial means.

First Flush: The delivery of a disproportionately large load of pollutants during the early part of storms due to the rapid run-off of accumulated pollutants.

City Storm Water Activity Permit: A City required permit, issued to any person or business that intends to disturb more than one acre of property.

General State Construction Storm Water Permit: A State required permit issued to any person or business that intends to disturb more than one acre of property.

General Permit: A Federal, or State permit issued under the NPDES to allow storm water discharges to waters of the United State.

Grading: The cutting and/or filling of the land surface to a desired slope or elevation.

Hazardous Waste: By-products of society that can pose a substantial or potential hazard to human health or the environment when improperly managed. Possesses, at least, one of four characteristics (flammable, corrosivity, reactivity, or toxicity), or appears on special Environmental Protection Agency (EPA) lists.

Heavy Metals: Metals of high specific gravity, present in municipal and industrial wastes that pose long-term environmental hazards. Such metals include cadmium, chromium, cobalt, copper, lead, mercury, nickel, and zinc.

Illegal Discharge: Any direct or indirect non-storm water discharge to the storm drain system, except discharges from fire fighting activities and other discharges exempted in this ordinance.

Illicit Connection: Any physical connection to a publicly maintained storm drain system allowing discharge of non-storm water which has not been permitted by the public entity responsible for the operation and maintenance of the system.

Impervious Surface: A surface which prevents or retards the penetration of water into the ground including, but not limited to, roofs, sidewalks, patios, driveways, parking lots, concrete and asphalt paving, gravel, compacted native surfaces and earthen materials,

and oiled, macadam, or other surfaces which similarly impede the natural infiltration of storm water.

Individual Permit: A permit issued under the NPDES program for a specific facility, whereby the unique characteristics of that facility may be addressed through the imposition of special conditions or requirements.

Infiltration: The downward movement of water from the surface to the subsoil. The infiltration capacity is expressed in terms of inches/hour.

Ingress/Egress: The points of access to and from a property.

Inlet: An entrance into a ditch, storm sewer, or other waterway.

Land Disturbing Activity: A human induced change to improved or unimproved land, including, but not limited to, new home or building construction, expansion of an existing building or home, demolition activity, clearing, grubbing, leveling, excavation, fill operations, grading, trenching, landscaping, drainage, pipe installation, drilling, mining, dredging, road construction or improvement, paving, and improvements for use as parking or storage.

Municipal Separate Storm Sewer System (MS4): A municipally owned and operated storm water collection system that consists of any or all of the following: curb & gutter, drainage swales, piping, ditches, canals, detention basins, inlet boxes, or any other system used to convey storm water that discharges into canals, ditches, streams, or lakes not owned and operated by the City.

Mulch: A natural or artificial layer of plant residue or other materials covering the land surface which conserves moisture, holds soil in place, aids in establishing plant cover, and minimizes temperature fluctuations.

Non-point Source: Pollution caused by diffuse sources (not a single location such as a pipe) such as agricultural or urban run-off.

NPDES (National Pollutant Discharge Elimination System): EPA's program to control the discharge of pollutants to waters of the United States.

NPDES Permit: An authorization, or license, or equivalent control document issued by EPA or an approved state agency to implement the requirements of the NPDES program.

Off-site: Any area lying upstream of the site that drains onto the site and any area lying downstream of the site to which the site drains.

On-site: The entire property that includes the proposed development.

Outfall: The point, location, or structure where wastewater or drainage discharges from a sewer pipe, ditch, or other conveyance to a receiving body of water.

Point Source: Any discernible, confined, and discrete conveyance, including but not limited to any pipe, ditch, channel, tunnel, conduit, well, discrete fissure, container, platform, rolling stock, concentrated animal feeding operation, or vessel or other floating craft, from which pollutants are or may be discharged.

Plat: A map or representation of a subdivision showing the division of a tract or parcel of land into lots, blocks, streets, or other divisions and dedications.

Pollutant: Generally, any substance introduced into the environment that adversely affects the usefulness of a resource. Pollutants may include, but are not limited to: paints, varnishes, and solvents; oil and other automotive fluids; non-hazardous liquid and solid wastes and yard wastes; refuse, rubbish, garbage, litter, or other discarded or abandoned objects, and accumulations, so that same may cause or contribute to pollution; floatables; pesticides, herbicides, and fertilizers; hazardous substances and wastes; sewage, fecal coli form and pathogens; dissolved and particulate metals; animal wastes; wastes and residues that result from constructing a building or structure; and
noxious or offensive matter of any kind.

Public Works Department: Shall be the Syracuse City Public Works Department.

Receiving Waters: Bodies of water or surface water systems that receive water from upstream constructed (or natural) systems.

Retention: The holding of run-off in a basin without release except by means of evaporation, infiltration, or emergency bypass.

Retention Basin: A depression in the land designed to retain water from flowing downstream. A retention basin does not allow for any downstream flow, other that overland if the capacity of the basin is exceeded, Such a facility allows only for the storage of a fixed amount water, and is not normally allowed within the City's storm drain system.

Riparian: A relatively narrow strip of land that borders a stream or river.

Riprap: A combination of large stone, cobbles and boulders used to line channels, stabilize banks, reduce run-off velocities, or filter out sediment.

Run-on: Storm water surface flow or other surface flow which enters property other than that where it originated.

Run-off: That part of precipitation, snow melt, or irrigation water that runs off the land into streams or other surface water. It can carry pollutants from the air and land into the receiving waters.

Sedimentation: The process of depositing soil particles, clays, sands, or other sediments that were picked up by run-off.

Sheet Flow: Run-off which flows over the ground surface as a thin, even layer, not concentrated in a channel.

Source Control: A practice or structural measure to prevent pollutants from entering storm water run-off or other environmental media.

Stabilization: The proper placing, grading and/or covering of soil, rock, or earth to ensure its resistance to erosion, sliding, or other movement.

Storm Drain: A slotted opening leading to an underground pipe or open ditch for carrying surface run-off.

Storm Drain System: A system of surface and underground conveyance, consisting of curb and gutter, street surface, inlet and clean-out boxes, piping, open channels and detention basins, ditches, channels, storm drains, owned and operated by the City or private owners, which is designed and used to convey or collect storm water.

Storm Water: Rainfall run-off, snow melt run-off, and drainage. It excludes infiltration.

Storm Water Pollution Prevention Plan: A document which describes the Best Management Practices and activities to be implemented by a person or business to identify sources of pollution or contamination at a site and the actions to eliminate or reduce pollutant discharges to storm water, storm water conveyance systems, and/or receiving waters. This plan must be prepared prior to obtaining a general state or county construction storm water permit.

Swale: An elongated depression in the land surface that is at least seasonally wet, is usually heavily vegetated, and is normally without flowing water. Swales direct storm water flows into primarily drainage channels and allow some of the storm water to infiltrate into the ground surface.

Treatment Control BMP: A BMP that is intended to remove pollutants from storm water.

Waters of the State: Surface waters and ground waters within the boundaries of the State of Utah and subject to its jurisdiction.

Waters of the United States: Surface watercourses and water bodies as defined in Title 40 Part 122.2 of Code of Federal Regulation (CFR) including all natural waterways and definite channels and depressions in the earth that may carry water, even though such waterways may only carry water during rains and storms and may not carry storm water at and during all times and seasons.

Wetlands: An area that is regularly saturated by surface or ground water and subsequently characterized by a prevalence of vegetation that is adapted for life in saturated soil conditions. Examples include, but are not limited to, swamps, bogs, marshes, and estuaries.

4-08-030: **APPLICABILITY.** This ordinance shall apply to all water entering the storm drain system generated on any developed and undeveloped lands unless explicitly exempted by an authorized enforcement agency.

4-08-040: **RESPONSIBILITY OF ADMINISTRATION.** The Syracuse City Public Works Department shall administer, implement, and enforce the provisions of this ordinance. Any powers granted or duties imposed upon the authorized enforcement agency may be delegated in writing by the Director of Public Works to persons or entities acting in the beneficial interest of or in the employ of the agency.

4-08-050: **SEVERABILITY.** The provisions of this ordinance are herby declared to be severable. If any provision, clause, sentence, or paragraph of this Ordinance or the application thereof to any person, establishment, or circumstances shall be held invalid, such invalidity shall not affect the other provisions or application of this Ordinance.

4-08-060: **ULTIMATE RESPONSIBILITY.** The standards set forth herein and promulgated pursuant to this ordinance are minimum standards; therefore, this ordinance does not intend nor imply that compliance by any person will ensure that there will be no contamination, pollution, nor unauthorized discharge of pollutants.

4-08-070: PROHIBITIONS.

A. No vehicle shall be driven or moved on any street, highway or other public place unless such vehicle is so constructed, loaded or covered as to prevent any of its load from dropping, sifting, leaking or otherwise escaping there from, except that sand or other substances may be dropped for the purpose of securing traction, or water or other substances may be sprinkled on a roadway in cleaning or maintaining such roadway for the travel of the general public.

B. No vehicle loaded with garbage, waste paper, ashes, refuse, trash, rubbish, waste, wire, paper, cartons, boxes, glass, solid waste, scrap metal, or any other material of an unsanitary nature that is susceptible to blowing or bouncing from a moving vehicle shall be driven or moved on any street or other public place unless the load is covered with a sufficient cover to prevent the load or any part of the load from spilling onto the street or other public place.

C. No person shall operate any vehicle so as to track or drop mud, stones, dirt, concrete, gravel or other similar material onto public streets by construction or delivery vehicles. It shall be the duty of the driver of a vehicle who unlawfully drops or deposits mud, stones, concrete, gravel or other similar material or permits the load or any portion thereof to be dropped or deposited upon any street or other public place to immediately remove the same or cause it to be removed. It shall be the duty of the driver of any vehicle to clean the tires and vehicle undercarriage of dirt or debris before the vehicle enters onto a paved surface public right of way.

D. No person shall discharge waste concrete or concrete truck rinse water except into pre-approved discharge facilities or designated areas. Dumping of excess concrete shall not be allowed.

E. Stockpile construction or yard improvement materials or debris in the street or in the gutter unless being stored in a self-contained storage unit that has been pre-approved by the Public Works Department. This includes, but is not limited to, ramps being constructed for temporary access across the existing curb and gutter; stockpiling of topsoil or other fill material; stockpiling of sand, gravel, landscape rock, bark, mulch or any other material that may be considered a source of pollution to the storm water system.

4-08-080: ILLICIT DISCHARGES. No person shall discharge or cause to be discharged into the City storm drain system or watercourses any materials including, but not limited to, pollutants or waters containing any pollutants that cause or contribute to a violation of applicable water quality standards other than storm water.

A. The commencement, conduct or continuance of any illegal discharge to the storm drain system is prohibited except as described as follows:

(1) Water line flushing or other potable water sources;

(2) Landscape irrigation or lawn watering;

(3) Diverted stream flows;

(4) Rising ground water;

(5) Ground water infiltration to storm drains;

(6) Uncontaminated pumped ground water;

(7) Foundation or footing drains (not connected to floor drains);

(8) Crawl space sump pumps;

(9) Air conditioning condensation;

(10) Springs;

(11) Non-commercial washing of vehicles;

(12) Natural riparian habitat or wetland flows;

(13) Swimming pools (if de-chlorinated – typically less than one PPM chlorine);

(14) Fire fighting activities, and any other water source not containing pollutants;

(15) Discharges specified in writing by the authorized enforcement agency as being necessary to protect public health and safety.

B. Dye testing is an allowable discharge, but requires a verbal notification to the authorized enforcement agency prior to the time of the test.

C. The prohibition shall not apply to any non-storm water discharge permitted under an NPDES permit, waiver, or waste discharge order issued to the discharger and administered under the authority of the Federal Environmental Protection Agency, provided that the discharger is in full compliance with all requirements of the permit, waiver, or order and other applicable laws and regulations, and provided that written approval has been granted for any discharge to the storm drain system.

D. This prohibition expressly includes, without limitation, illicit connections made in the past, regardless of whether the connection was permissible under law or practices applicable or prevailing at the time of connection. This prohibition also expressly includes, without limitation, connections of sanitary sewer lines to the MS4. (Ord. 06-06)

4-08-090: Erosion Control on Construction Sites.

A. <u>City Storm Water Activity Permit</u>

(1) Any person or business responsible for disturbing one acre or more of ground shall obtain a City Storm Water Activity Permit from the Syracuse City Public Works Department. Syracuse City will comply with the requirements for the Clean Water Act phase II, and all other State and Federal regulations. This is to include applications, permits, plans and implementation. No person shall be granted a storm water activity permit for land-disturbance that would require the uncovering of 1 acre or more without the approval of a Storm Water Pollution Prevention Plan by the Syracuse City Public Works Department.

(a) Syracuse City Storm Water Activity Permit – This permit can be obtained from the City Public Works department with building permits or with the subdivision approval prior to the preconstruction meeting for the proposed development. All projects and sites with a total plan to effect greater than 1.0 acre of land must apply. Additionally, before connecting to an existing storm

drain system (ditches, pipes, catch basin, boxes, manholes, etc.) the developer/contractor shall obtain a Strom Water Activity permit from the City Public Works Department. All basins shall be calculated, designed and stamped by a Licensed Professional Engineer. Any appropriate fees must be paid.

(b) Utah Pollution Discharge Elimination System (UPDES) Permit – This permit is filed with the Utah Division of Water Quality, Department of Environmental Quality. The permit can be obtained from the internet at: http://waterquality.utha.gov/updes/stormwater.htm All sites with a total plan to effect greater than 1.0 acre of land must apply. The appropriate fee must be paid to the state. A Storm Water Pollution Prevention Plan (SWPPP), or Erosion Control Plan or Pollution Prevention Plan) must be prepared and on site for this application. A minimum requirement for approval is possession of an active BMP plan for the proposed project. (Ord. 12-07)

(c) Stream Alteration Permit – A Stream Alteration Permit is filed with State Department of Natural Resources, Division of Water Rights. This permit overlaps the 404 wetlands permit because it is applicable to the area equal to the stream plus two times the bank full width up to 30 feet. Any modifications to the stream or banks within this area must comply with the Stream Alteration Permit.

(d) EPA 404 Wetlands Permit – This permit is filed with the US Army Corp of Engineers. It is applicable for all wetlands within a development. This will apply to all wetlands depending upon the presence of water, soils type, and vegetation as determined in a Wetlands Delineation Report. All “waters of the US” are affected to the normal high water mark. No fee is typically required for this permit. A letter of non-regulated wetlands may be applicable. Any mitigation that may be required must be done prior to recording a Final Plat.

(2) Each City Storm Water Activity permit application shall bear the name and address of the owner or developer of the site, and of any consulting firm retained by the applicant together with the name of the applicant’s principal contact at such firm and shall be accompanied by a filing fee established by resolution of the City Council.

(3) The applicant must also obtain a general state construction storm water permit from the Department of Environmental Quality, Division of Water Quality.

(4) A City Storm Water Activity Permit is not required for the following activities:

(a) Any emergency activity that is immediately necessary for the protection of life, property, or natural resources.

(b) Existing nursery and agricultural operations conducted as a permitted main or accessory use.

B. Application Review Fees: The fee for review of the construction storm water permit shall be based on the amount of land to be disturbed at the site, and the fee structure shall be established from time to time by resolution of the Syracuse City Council. All of the monetary fees shall be credited to a local budgetary category to support local

plan review, inspection and program administration, and shall be made prior to the issuance of any building permit or construction activity for the development.

C. Waivers for Providing Storm Water Pollution Prevention Plan: Every applicant shall provide for storm water pollution prevention plan as required by this ordinance, unless a written request is filed to waive this requirement. Requests to waive the storm water pollution prevention plan requirements shall be submitted to the Public Works Department for approval.

(1) The minimum requirements for storm water pollution prevention plan may be waived in whole or in part upon written request of the applicant, provided that at least one of the following conditions applies:

(a) It can be demonstrated that the proposed development is not likely to impair attainment of the objectives of this ordinance.

(b) Alternative minimum requirements for on-site management of storm water discharges have been established in a storm water pollution prevention plan that has been approved by the Public Works Department and the implementation of the plan is required by local ordinance.

(c) The Public Works Department finds that meeting the minimum on-site pollution prevention plans are not feasible due to the natural or existing physical characteristics of a site.

(d) Non-structural practices will be used on the site that reduces:

(i) The generation of storm water from the site;

(ii) The size and cost of storm water storage; and

(iii) The pollutants generated at the site.

The amount of credit available for using such non-structural practices shall be determined by the Public Works Department.

(2) In instances where one of the conditions above applies, the Public Works Department may grant a waiver from compliance with these storm water pollution prevention plans, as long as acceptable mitigation measures are provided. However, to be eligible for a variance, the applicant must demonstrate to the satisfaction of the Public Works Department that the variance will not result in the following impacts to downstream waterways:

(a) Deterioration of existing culverts, bridges, dams, and other structures;

(b) Degradation of biological functions or habitat;

(c) Accelerated stream bank or streambed erosion or siltation;

(d) Increased threat of flood damage to public health, life, property.

D. Storm Water Management Plan

(1) A Storm Water Management Plan shall be required with all permit applications and will include sufficient information (e.g., maps, hydrologic calculations, etc) to evaluate the environmental characteristics of the project site, the potential impacts of all proposed development of the site, both present and future, on the water resources, and the effectiveness and acceptability of the measures proposed for managing storm water generated at the project site. The intent of this planning process is to determine the type of storm water management measures necessary for the proposed project, and ensure adequate planning for management of storm water run-off from future development. The Storm Water Management Plan shall be prepared in accordance with a checklist provided by the Public Works Department.

(2) For development or redevelopment occurring on a previously developed site, an applicant shall be required to include within the storm water management plan measures for controlling existing storm water runoff discharges from the site in accordance with the standards of this Ordinance to the maximum extent practicable.

E. Review and Approval

(1) The Public Works Department will review each application to determine its conformance with the provisions of this regulation. Within 30 days after receiving an application, the Public Works Department shall, in writing:

(a) Approve the permit application;

(b) Approve the permit application subject to such reasonable conditions as may be necessary to secure substantially the objectives of this regulation, and issue the permit subject to these conditions; or

(c) Disapprove the permit application, indicating the reason(s) and procedure for submitting a revised application and/or submission.

(2) Failure of the Public Works Department to act on an original or revised application within the specified time period shall authorize the applicant to proceed with the plans as filed unless such time is extended by agreement between the applicant and the Public Works Department.

F. Inspection: Field inspections shall be conducted by the Syracuse City Public Works Department, the City Ordinance Enforcement Officer or other designated agent as outlined in the inspection checklist provided by the Public Works Department.
G. As Built Plans : All applicants are required to submit actual "as built" plans for any storm water management practices located on-site after final construction is completed. The plan must show the final design specifications for all storm water management facilities and must be certified by a professional engineer. A final inspection by the Syracuse Offsite Improvement Inspector and the Public Works Department is required before the release of any performance securities can occur.

4-08-100: **Post Construction.** Unless judged by the Syracuse City Public Works Department to be exempt or granted a waiver, the following performance criteria shall be addressed for storm water management at all sites:

A. All site designs shall establish storm water management practices to control the peak flow rates. Transmission pipes shall be designed to accommodate a ten year, one hour storm, and regional detention basins shall be designed to facilitate a 100 year, one hour storm, with a 0.2 cfs per acre discharge and local on-site detention basins shall be designed to facilitate a 50 year, one hour storm. These practices should seek to utilize pervious areas for storm water treatment and to infiltrate storm water run-off from driveways, sidewalks, rooftops, parking lots, and landscaped areas to the maximum extent practical to provide treatment for both water quality and quantity. (Ord. 12-07)

B. All storm water run-off generated from new development shall not discharge untreated storm water directly into a jurisdictional wetland or waters of the state without adequate treatment. In no case shall the impact on functional values be any greater than that allowed by the Army Corp of Engineers (ACE) or the Department of Environmental Quality (DEQ) responsible for natural resources.

C. Annual groundwater recharge rates shall be maintained by promoting infiltration through the use of structural and non-structural methods. At a minimum, annual recharge from the post development site shall mimic the annual recharge from pre-development site conditions.

D. For new development, structural best management practices (BMP's) shall be designed to remove 75% of the average annual post development total suspended solids load (TSS). It is presumed that a structural treatment practice complies with this performance standard if it is:

(1) Sized to capture the prescribed water quality volume (WQV);

(2) Designed according to the specific performance criteria outlined in the American Public Works Association Manual;

(3) Constructed properly; and

(4) Maintained regularly.

E. Storm water discharges to critical areas with sensitive resources (i.e., cold water fisheries, shellfish beds, swimming beaches, recharge areas, water supply reservoirs) may be subject to additional performance criteria, or may need to utilize or restrict certain storm water management practices.

F. Storm water discharges from land uses or activities with higher potential pollutant loadings, known as "hotspots," may require the use of specific structural BMPs and pollution prevention practices. Oil separators shall be required on all sites greater than one acre identified as "hotspots" such as commercial land use sites, parking areas other than residential, mechanic shops, fuel stations, or associated parking areas. Oil separators must be capable of removing particulates down to 150 microns. Design and sizing requirements of oil separators shall be reviewed by the City Engineer prior to installation. (Ord. 12-07)

4-08-110: Basic Storm Water Management Design Criteria.

A. Site Design Feasibility: Storm water management practices for a site shall be chosen based on the physical conditions of the site. Among the factors that should be considered:

(1) Topography

(2) Maximum Drainage Area

(3) Depth to Water Table

(4) Soils

(5) Slopes

(6) Ground cover

(7) Location in relation to environmentally sensitive features or ultra-urban areas

B. Conveyance Issues: All storm water management practices shall be designed to convey storm water to allow for the maximum removal of pollutants and reduction in flow velocities. This shall include, but not be limited to:

(1) Maximizing of flow paths from inflow points to outflow points

(2) Protection of inlet and outfall structures

(3) Elimination of erosive flow velocities

(4) Providing of under drain systems, where applicable

C. General Policy: It is the general policy of the City to design storm water facilities as:

(1) Storm water conveyance pipe @ 10 year design standard

(2) Non-regional detention basin capacity @ 50 year design standard

(3) Regional detention basin capacity @ 100 year design standard

Local storm drain pipes and inlet structures shall be designed to convey the storm waters of a 10-year event totally within an underground pipe system. The storm water piping shall handle the 10-year event. All storm water calculations for detention shall be detailed to show that the entire area in consideration shall meet the requirement of .2 cfs discharge per acre developed established by Davis County Public Works, any storm water in excess of this requirement shall be detained.

D. Intensity-Duration-Frequency Curve IDF: For the use of the Rational Formula, in determining calculations for a storm, the IDF curve available for the area closest to the City of Syracuse shall be used.

E. Basin Construction and Design Criteria

(1) The location of the basin shall be such that convenient access for maintenance is possible. This generally means that local access is available to a dedicated roadway, any easements are provided by the owner of the property in question.

In addition, volume in adjacent swales or ditches shall not be considered a portion of the storage system.

(2) The side slopes to all basins shall not exceed 3:1 (3 horizontal feet to 1 foot vertical elevation rise) slope, with 4.5:1 being desirable, for the ease of maintenance and mowing.

(3) The bottom slope shall be designed to prevent permanent stagnation of water, and shall be minimum of 2% from inlet to outlet. The City may request additional low flow elimination remedies during the subdivision warranty period if stagnation of nuisance water occurs.

(4) The basin freeboard shall be a minimum of one foot (top of berm or surface to high water mark of overflow outlet).

(5) The spillway shall be designed to overflow onto a City street or other channel with the capacity to contain and carry the overflow to an approved outlet. Said path to either a street or channel shall be within a maintained area, improved to allow flows without erosion, and within a drainage easement. All spillways shall be designed to protect adjacent embankments, structures or properties, and shall not present flooding potential to adjacent structures or homes.

(6) The outlet control for all small, localized basins may have fixed, size-calculated orifice plates, capable of being replaced if necessary, mounted on the outlet of the basin, as approved by the City Engineer. Large, regional basins shall be designed to have either fixed or screw-type gates installed to allow for adjustment by City Personnel, if necessary. The screw-gates shall be Waterman C-10 O.A.E. or City Engineer approved equal.

(7) All grates shall be designed with hot-dipped galvanized (not painted) metal grates, with bars at spacing to prevent or prohibit children's feet from falling in the structure, and still avoiding clogging with debris. Bar spacing shall never exceed 3" in any direction.

(8) Low flows shall be designed to flow through the basin in a pipe designed to carry a 1 year frequency flow. A concrete gutter shall not ban alternate to the pipe system. The pipe size and material shall be a minimum 15"-inch.

(9) The finish ground cover shall be either lawn sod or other landscaping, unless an alternate is approved by the City Council. A minimum 4"-inches of top soil shall be installed prior to the area being sodded. If an alternate of weed barrier geo-textile fabric and cobbles is approved by the City Council, a minimum size of 6"-inch cobble rock is required.

(10) Basins shall be designed to allow vehicle access for maintenance by City Personnel.

F. Maintenance Agreements: All storm water treatment practices shall have an enforceable operation and maintenance agreement to ensure the system functions as designed.

(1) This agreement will include any and all maintenance easements required to access and inspect the storm water treatment practices, and to perform routine

maintenance as necessary to ensure proper functioning of the storm water treatment practice. The agreement shall include provisions allowing for access and inspections on a reasonable basis. In addition, a legally binding covenant specifying the parties responsible for the proper maintenance of all storm water treatment practices shall be secured prior to issuance of any permits for land disturbance activities.

(2) If a responsible party fails or refuses to meet the requirements of the maintenance agreement, the Public Works Department, after reasonable notice, may correct a violation of the design standards or maintenance needs by performing all necessary work to place the facility in proper working condition. In the event that the storm water management facility becomes a danger to public safety or public health, the Public Works Department shall notify the party responsible for maintenance of the storm water management facility in writing. Upon receipt of that notice, the responsible person shall have 30 days to effect maintenance and repair of the facility in an approved manner. After proper notice, the Public Works Department may assess the owner(s) of the facility for the cost of repair work and any penalties; and the cost of the work shall be a lien on the property, or prorated against the beneficial users of the property, and may be placed on the tax bill and collected as ordinary taxes by the county assessor.

4-08-120: **Notification of Spills.** Notwithstanding other requirements of law, as soon as any person responsible for a facility or operation, or responsible for emergency response for a facility or operation has information of any known or suspected release of materials which are resulting or may result in illegal discharges or pollutants discharging into storm water, the storm drain system, or water of the U.S. said person shall take all necessary steps to ensure the discovery, containment, and cleanup of such release. In the event of such a release of hazardous materials said person shall immediately notify emergency response agencies of the occurrence via emergency dispatch services. In the event of a release of non-hazardous materials, said person shall notify the authorized enforcement agency in person or by phone or facsimile or email no later than the next business day. Notifications in person or by phone shall be confirmed by written notice addressed and mailed to the Syracuse City Public Works Dept., within three business days of the notice. (Ord. 12-07)

4-08-130: **Enforcement, Violation and Penalties.**

A. Stop-Work Order; Revocation of Permit: In the event that any person holding a City Storm Water Activity permit pursuant to this ordinance violates the terms of the permit or implants site development in such a manner as to materially adversely affect the health, welfare, or safety of persons residing or working in the neighborhood or development site so as to be materially detrimental to the public welfare or injurious to property or improvements in the neighborhood, the Public Works Department may suspend or revoke the site development permit, such that no work on storm water infrastructure shall be preformed or approved.

B. Violation and Penalties: Whenever the Public Works Department finds that a person has violated a prohibition or failed to meet a requirement of this Ordinance, Syracuse City Public Works Department may order compliance by written notice of violation to the responsible person. Such notice may require, without limitation:

(1) The performance of monitoring, analyses, and reporting;

(2) The elimination of illicit connections or discharges;

(3) That violating discharges, practices, or operations shall cease and desist;

(4) The abatement or remediation of storm water pollution or contamination hazards and the restoration of any affected property;

(5) Payment of a fine to cover administrative and remediation costs; and

(6) The implementation of source control or treatment BMPs.

Any person violating any of the provisions of this ordinance shall be deemed guilty of a Class B misdemeanor and each day during which any violation of any of the provisions of this ordinance is committed, continued, or permitted, shall constitute a separate offense.

CHAPTER 9

LAND DRAINS

4-09-010: Purpose
4-09-020: Recognition of the Land Drain System
4-09-030: Surface Drainage Systems Connection Prohibition
4-09-040 Connection Standards for Land Drain Connections

4-09-010: PURPOSE. The purpose of this Chapter is to protect public health and safety of the City and its inhabitants through regulations governing the utilization of land drain systems and connections to the City land drain system. (Ord. 08-05)(Ord. 08-09)

4-09-020: RECOGNITION OF THE LAND DRAIN SYSTEM: Syracuse City has constructed and established a land drain system for the purpose of draining subsurface waters from developing properties. Syracuse City Council hereby finds and determines that the land drain system is and has been a City operated utility and that connections to the land drain system have been regulated by the City for the protection of public health and safety and that such regulation continues to be necessary for the preservation of public health and safety and property values within the City. Therefore, all connections to the land drain system within Syracuse City, whether previously established or otherwise, shall comply with the provisions and regulations of this Chapter. However, nothing herein shall be construed to require authorized connections to be retrofit to meet new construction standards. The retroactive application of this ordinance shall be limited to the required disconnection of surface drainage systems or other surface collection conduits and appurtenances to the land drain system. (Ord. 08-05)(Ord. 08-09)

4-09-030: SURFACE DRAINAGE SYSTEMS CONNECTION PROHIBITED. Roof drainage structures, storm gutters, or other above-ground collection conduits ("Surface Drainage systems") are prohibited from connecting to or discharging storm water into City underground land drains. New residential dwellings constructed within subdivisions containing a land drain system are required to make a connection via a sub-surface service lateral stubbed to the dwelling foundation footing and connected to the main land drain line owned by the City. This section is expressly intended to operate retroactively and to require the disconnection of any surface drainage systems connected to a land drain system. The Syracuse City Public Works Director is hereby empowered and authorized to require the disconnection of any surface drainage system connected to the Syracuse City land drain system. The Public Works Director is hereby authorized, in his discretion, to grant a waiver from the requirements of this Chapter where the Public Works Directors finds: (1) the connection of a surface drain to the land drain system does not present a surcharge or flooding risk to other properties; and (2) the owner signs a recordable agreement, in a form acceptable to the City, agreeing to indemnify and hold the City harmless for any future damages or liability arising from the connection of the surface drain to the land drain system. (Ord. 08-05) (Ord. 08-09)

4-09-040: CONNECTION STANDARDS FOR LAND DRAIN CONNECTIONS. Any connection to the Syracuse City land drain system shall be authorized and approved by the Syracuse City Public Works Department and Syracuse City Building Department and shall comply with construction standards and regulations set forth in the Appendix to Title VIII of the Syracuse City Municipal Code. (Ord. 08-05)(Ord. 08-09)

CHAPTER 10

HOUSEHOLD AND GREEN WASTE RECYCLING

4-10-010: Definitions
4-10-020: Collection of household and green waste
4-10-030: Service charge
4-10-040: Method of payment of service charges
4-10-050: No accumulation of household and green waste
4-10-060: Containers
4-10-070: Closing of garbage containers required
4-10-080: Time and place of pickup
4-10-090: Disposal of community waste
4-10-010: Burning of refuse prohibited
4-10-011: Dumping household and green waste prohibited
4-10-012: Limitations upon dumping
4-10-013: Regulations

4-10-010: DEFINITIONS. The following terms, as used in this Title, are defined as follows: (Ord. 10-05)

BULKY WASTES: Wastes that are not capable of being stored in the approved automated refuse containers and cannot be picked up by normally used collection vehicles, including items such as large tree branches, lawn sod, Christmas trees, etc.

CONTAINER, APPROVED HOUSEHOLD AND GREEN WASTE CONTAINER: Approved household and green waste containers shall consist of 90 or 100 gallon recycling containers constructed from cross linked, high-density polyethylene, or equivalent, designed specifically for automated collection equipped with wheels for easy movement by residential users and containing permanently attached, tight-fitting lids, or as approved by the City. (Ord. 12-07)

COMMERCIAL SOLID WASTE, GREEN WASTE AND RECYCLABLE MATERIALS: Garbage, rubbish, trash, food wastes, recyclable materials, green waste, etc., resulting from the normal and incidental activities of commercial users.

COMMERCIAL USER: An enterprise, not a residence, such as a business, association, corporation, manufacturer, hotel, motel, resort, commercial entity, church, governmental or public entity other than the City, etc.

FOOD WASTES: Animal, vegetable, or mineral matter derived from the preparation or packaging of foodstuffs

GARBAGE, RUBBISH AND TRASH: All solid waste except hazardous waste, including but not limited to combustibles such as paper, wood, yard trimmings, etc. and non-combustibles such as meal, glass, stone, etc.

GREEN WASTE: Those green waste materials which can be recovered or otherwise diverted from waste stream, such as lawn cuttings, clippings from bushes and shrubs, leaves, and other similar green yard waste, but not including dirt, rock, sod, or yard materials with thorns, as mutually agreed upon and determined by the contractor and the City. (Ord. 12-07)

HAZARDOUS MATERIALS AND WASTE: Materials and wastes that are hazardous by reason of their pathological, explosive, radiological, or toxic character, including any chemical, compound, mixture, substance or article which is designated by the United States

Environmental Protection Agency, the State of Utah Department of Environmental Quality, or Davis County Health Department to be “hazardous” as that term is defined by or pursuant to Federal, State or local law.

HOUSEHOLD WASTE: Materials discarded from commonly used household substances, not including dirt, rocks, sod, flammables, hot ashes, coals, or similar materials. (Ord. 12-07)

NON-PROCESSIBLE WASTE. Goods and materials which are not residential and/or are prohibited by the disposal facility, including, but not limited to, the following:

(1) Any loads the majority of which consist of combustible material.

(2) Hazardous waste of any kind.

(3) Any material that when incinerated clearly includes electricity.

(4) Explosives.

(5) Medical or pathological wastes.

(6) Animal or human body parts or remains.

(7) Any materials the majority of which is liquid.

(8) Large appliances.

(9) Construction debris of un-processible proportions.

(10) Large metal objects of any kind.

(11) Large sealed containers of any kind.

(12) Motor vehicles or related parts.

(13) Any item exceeding two feet by two feet by five feet in dimensions.

(14) Wood having a cross section exceeding nine inches or five feet in length.

(15) Any material that is on fire; i.e., “Hot Load.”

(16) Commercial solid waste, as defined herein.

(17) Hazardous materials and waste, as defined herein.

(18) Bulky wastes, as defined herein.

RECYCLABLE MATERIALS: Those materials which can be recovered from or otherwise diverted from the waste stream for the purpose of recycling, such as metals, paper and plastics as mutually agreed upon and determined by the Contractor and the City.

RESIDENCE: An occupied dwelling unit such as a home, trailer, or multi-family dwelling of four (4) or less units, not including hotels or motels or mobile home trailer parks. Each unit of a multi-family dwelling shall be considered a separate residence for purposes of billing. A dwelling unit may be considered not occupied if the persons living therein are absent for over ninety (90) continuous days. Unless otherwise agreed to by the City and the Contractor,

residence shall not include dwelling units located within planned unit developments or other privately accessed developments accessible by private roadways, streets and driveways.

RESIDENTIAL GREEN WASTE: Green waste resulting from the normal and incidental activities of residences.

RESIDENTIAL RECYCLABLE MATERIALS: Recyclable materials resulting from the normal and incidental activities of residences.

RESIDENTIAL SOLID WASTE. Garbage, rubbish, trash, food wastes, etc. resulting from the normal and incidental activities of residences.

4-10-020: COLLECTION OF HOUSEHOLD AND GREEN WASTE. (Ord. 10-05)

1. Unless otherwise provided herein, the City, its agent, or contractor shall collect, remove, and dispose of all household waste and residential green waste recyclable materials. All household waste and residential green waste recyclable materials shall be collected, removed, and disposed of with such frequency and in such manner as the City Council may from time to time establish by regulation or contract. (Ord. 12-07)

2. Except as otherwise expressly permitted by this part, no household waste and green waste recyclable materials shall be removed or hauled away or transported upon the streets or public ways of the municipality except by the municipality, its agent, or contractor, and except by authorized persons hauling commercial green waste recyclable materials or household waste materials as hereinafter provided. (Ord. 12-07)

3. Nothing contained in this part shall preclude persons from hauling their own green waste recyclable materials over the streets and rights-of-ways of the municipality.

4. Except for those residences who have opted not to participate in the green waste recycling program in accordance with this Chapter, or those residences who have not signed up for green waste collection services in accordance with this Chapter, nothing in this part shall be construed as eliminating the charge made for residential solid waste and disposal services.

4-10-030: SERVICE CHARGE. (Ord. 10-05)

1. all residences within the municipality shall pay monthly service charges as more particularly set forth in the Fee Schedule as adopted by the City. The charges, rates, penalty fees for delinquency in payment, and other charges incidental, shall be set forth in the Fee Schedule and may be amended from time to time by the resolution of the City Council. An exception for green waste collection charges shall be made for those residences who have not signed up for green waste collection services in accordance with this chapter. (Ord. 12-07)

2. The Mayor, with the consent of the City Council, may excuse needy persons who are not reasonably capable of paying the monthly charge for residential collection of solid waste, green waste and/or recyclable materials from the payment of the residential rate for such period of time as may be deemed proper or necessary.

3. Participation in the City's green waste recycling program shall be on a voluntary basis. Residences desiring such service shall sign up in writing on forms provided by the City. Participants shall be required to participate in the program for at least six (6) months. Green waste containers may be used for solid waste disposal and collection from

December 1st through February 28th (or 29th in leap year) of every year. Green waste containers shall only be used for authorized green waste disposal and collection from March 1st through November 30th of each year.

4-10-040: METHOD OF PAYMENT OF SERVICE CHARGES. (Ord. 10-05)

1. The household waste and residential green waste recycling service charges above imposed by this part shall be added to the charge made for other utilities furnished through the municipality and shall be billed and collected in the same manner as those charges are billed and collected. (Ord. 12-07)

4-10-050: NO ACCUMULATION OF HOUSEHOLD AND GREEN WASTE. (Ord. 10-05)

1. It shall be unlawful for any person to accumulate household waste and green waste recyclable materials or cause said materials to be deposited upon any street or right-of-way. The City may permit the processing of green waste recyclable materials upon premises properly equipped and maintained so as to prevent the creation of a nuisance or a hazard to health or permit the depositing of ashes and other dry material for filling purposes at such places as the City may designate and under such restrictions as the City Council may by regulation impose. Additionally, the City may grant to any person permission for sorting, bailing, and marketing trade waste upon premises properly equipped and maintained. (Ord. 12-07)

4-10-060: CONTAINERS. (Ord. 10-05)

1. All residential household and green waste recyclable materials to be collected by the City, its agents or contractors, from residential users shall be placed only in suitable and sufficient garbage receptacles with tight-fitting lids.

2. Title to containers furnished by the City, its agents or contractors, to residential users, whether the right to the use thereof is paid in a lump sum or on a monthly basis, shall be retained by the City and the payment made by residents therefore shall be rental for the use thereof.

3. Users renting containers furnished by the City, or having custody thereof, shall keep the container free from destructive or decorative markings, shall maintain the original color thereof, and shall keep the inside of said containers clean and free from build-up of fungus or bacteria or any other type of contaminant that causes odors or facilitates deterioration of the inside or outside of such container.

4. Residential users shall report to the City, or authorized garbage hauler, any damage to or malfunctioning containers that limit their usefulness for receipt of waste so that the same may be returned to the supplier for repair or replacement pursuant to the supplier's warranty covering the same. (Ord. 12-07)

5. containers lost or missing through no fault of the user thereof shall be replaced by the City without charge, but users shall exercise due care to protect containers against loss through theft or misappropriation. (Ord. 12-07)

6. Containers furnished by the City are issued to specific users by number and are non-transferable. Upon discontinuance of use by a resident, containers shall be returned to the City.

4-10-070: CLOSING OF GARBAGE CONTAINERS REQUIRED. Approved containers shall not be overfilled to the extent that the contents may be spilled during the process of pickup and dumping into the collection vehicle. All green waste materials not deposited for pickup shall be placed in approved containers and shall be tightly closed in such a manner as to prevent offensive odors or flies. (Ord. 10-05) (Ord. 12-07)

4-10-080: TIME AND PLACE OF PICKUP. (Ord. 10-05)

1. All household waste and green waste recyclable materials subject to collection by the City shall be placed on the edge of the street next to the driveway on the opposite side of the driveway approach from the mailbox, but in no event within ten (10) feet of the mailbox, and with the container's wheels as close to the curb as reasonably possible, with the hinge thereof to curbside and the lid opening facing toward the street. When snow or street construction prevents placing of the container against the curb, the container shall be placed not over two (2) feet from the edge of said snow or construction and in a manner that will not obstruct traffic or unduly impede the snowplowing activities of the City. (Ord. 12-07)

2. Containers shall not be placed or permitted to block driveways or through traffic.

3. Until otherwise provided by regulation, containers must not be set out upon the street for collection prior to the evening of the day before collection and must be set out prior to 6:00 a.m. on the day of collection. Waste containers that have been emptied shall be removed from the street right-of-way within 24 hours after containers are emptied. (Ord. 12-07)

4. It shall be unlawful to park a vehicle upon a public street within the City during the hours of solid waste and recycling service pickup on said street in a manner that interferes with access thereto by the solid waste, green waste, or recyclable materials collection vehicle.

4-10-090: DISPOSAL OF COMMUNITY WASTE. Green waste may be disposed of by business establishments, and residences that have not signed up for the City's green waste collection services, in vehicles provided by them subject to regulation by the City as to the places of disposal and as to the type of vehicle used to avoid spillage upon public ways of the municipality, hazards to safety, and the prevention of nuisances. (Ord. 10-05)

4-10-010: BURNING OF GREEN WASTE PROHIBITED. It shall be unlawful for any person to burn green waste in the open air or in any furnace or stove within the municipality unless expressly allowed by State regulations or County Health and Burning Ordinances. (Ord. 10-05)

4-10-011: DUMPING HOUSEHOLD, CONSTRUCTION, AND GREEN WASTE PROHIBITED. It shall be unlawful for any person to place, deposit, or dump household, construction, and green waste upon any lot within the municipality whether such lot is occupied or vacant and whether such person so placing, depositing or dumping such refuse is the owner, tenant, occupant or lessor thereof or has the same under his jurisdiction and control. This section shall not prevent property owners from composting their green waste materials on their property. (Ord. 10-05) (Ord. 12-07)

4-10-012: LIMITATIONS UPON DUMPING. Dumping green waste recyclable materials shall be permitted only in such places as are designated by the City Council. Dumping shall be subject to such rules and regulations as may be formulated by the City Council. All processible waste generated within the City shall be delivered to the Wasatch Integrated Waste Management District facilities, as said District shall direct. (Ord. 10-05)

4-10-013: REGULATIONS. The City Council may adopt such regulations as, in its opinion, are necessary to implement this part and its objectives. (Ord. 10-05)

CHAPTER 11

SYRACUSE CITY HALL
(adopted by R11-20)

4-11-1 Purpose
4-11-2: Hours of Operation
4-11-3: Building Availability
4-11-4: Building Rental Process and Fees
4-11-5: Alcoholic Beverages, Drugs, or Gambling
4-11-6: Nuisances
4-11-7: Safety and Security
4-11-8: Lost and Found Policy
4-11-9 City Hall Rental Policies
4-11-10 Refund Policy

4-11-1 Purpose. The purpose of the Syracuse City Hall is to conduct the business needs of City residents and provide available amenities to the community to enjoy during those times when it is not otherwise in use. In order to promote the orderly and harmonious use of the City Hall's lobby and Council Chambers, this Section establishes the following procedures and rules as well as rental fees as established and adopted in the City's fee schedule. Deposits and rental fees are solely for the purpose of ensuring that these public amenities remain in good condition and to cover expenses incurred by municipal staff in overseeing reserved events and providing emergency services as necessary.

4-11-2 Hours of Operations: The Syracuse City Hall shall be open to the public as follows: Mondays through Fridays, from 8:00 a.m. to 5:00 p.m. City staff shall post notices on the front doors prior to the building closing during regular operating hours. City Hall will be closed on major holidays (i.e. Thanksgiving, Christmas Day, New Years Day, etc.).

4-11-3 Building Availability: The City Manager reserves the right to withhold reservations for any given day, during periods of availability, for any City-sponsored event or if the City Manager determines that the building requires maintenance, cleanup, repair, other work of an extraordinary nature, or the unavailability of required City personnel. Facility rentals shall be available Mondays through Fridays, from 5:00 to 11:00 p.m., and Saturdays, from 8:00 a.m. to 11:00 p.m., but no holidays. Interested parties shall not rent any portion of City Hall for events requiring the purchase of tickets or the payment of fees.

4-11-4 Building Rental Process and Fees:

(A) Reservations shall be made in person through the Community Development Department, during regular business hours, in half-hour increments.
(B) Renters shall be responsible adults, 18 years or older, and on site for the entire event.
(C) City staff will accept reservations on a first-come first-served basis, and deposits and applicable rental fees are due upon submittal of the application.
(D) Any person/group may rent the Syracuse City Council Chambers and/or lobby under the following conditions:
    1. Schedule for an available date and sign a building-rental agreement form
    2. Pay a deposit at time of scheduling, refunded if facility is left clean and undamaged
    3. Pay the hourly rate, as established in the City fee schedule
    4. All events/activities must be legal and in conformance with all Syracuse City Ordinances
    5. The following is a list of available facilities for rent with associated fees as located in the City fee schedule established and adopted by City Council:

LOBBY
Small Events (<25 persons – no food or beverages)
Resident: $50.00 deposit and $35.00 per hour staffing
Non-Resident: $75.00 deposit and $40.00 per hour staffing
Small Events (<25 persons – with food and/or beverages)
Resident: $100.00 deposit and $40.00 per hour staffing
Non-Resident: $150.00 deposit and $45.00 per hour staffing
Large Events (>25 persons – no food or beverages)
Resident: $300.00 deposit and $45.00 per hour staffing
Non-Resident: $450.00 deposit and $50.00 per hour staffing
Large Events (>25 persons – with food and/or beverages)
Resident: $300.00 deposit and $50.00 per hour staffing
Non-Resident: $450.00 deposit and $55.00 per hour staffing

COUNCIL CHAMBERS
Small Events (<25 persons – no food or beverages)
Resident: $100.00 deposit and $35.00 per hour staffing
Non-Resident: $150.00 deposit and $40.00 per hour staffing
Large Events (>25 persons – no food or beverages)
Resident: $300.00 deposit and $40.00 per hour staffing
Non-Resident: $450.00 deposit and $45.00 per hour staffing

LOBBY AND COUNCIL CHAMBERS
Small Events (<25 persons – no food or beverages)
Resident: $150.00 deposit and $35.00 per hour staffing
Non-Resident: $200.00 deposit and $40.00 per hour staffing
Small Events (>25 persons – with food and/or beverages in lobby)
Resident: $200.00 deposit and $40.00 per hour staffing
Non-Resident: $250.00 deposit and $45.00 per hour staffing
Large Events (>25 persons – no food or beverages)
Resident: $350.00 deposit and $50.00 per hour staffing
Non-Resident: $400.00 deposit and $55.00 per hour staffing
Large Events (>25 persons – with food and/or beverages)
Resident: $450.00 deposit and $55.00 per hour staffing
Non-Resident: $500.00 deposit and $60.00 per hour staffing

4-11-5 **Alcoholic Beverages, Drugs, Smoking, or Gambling:** Syracuse City prohibits the sale, consumption, or possession of intoxicating liquors or beverages and dangerous or narcotic drugs and smoking or gambling of any kind in City Hall.

4-11-6 **Nuisances:** It shall be unlawful for any person to use threatening, abusive, insulting, or indecent language, to commit any obscene or indecent act, to fight, or to create a public disturbance or nuisance within or on City Hall premises. Any person who loiters in or at City Hall while under the influence of alcohol or drugs or who otherwise disturbs the peace of others at any Syracuse City municipal building by begging, soliciting, making undue noise, or engaging in disruptive activities shall be deemed as creating a public nuisance.

4-11-7 **Safety and Security:**

(A) During any building rental, at least one Syracuse City employee shall be present in case of an emergency.

(B) Employee training: All Syracuse City employees supervising the activities of those renting the lobby or Council Chambers shall receive training in and/or be certified in the following:
1. First aid/CPR
2. Blood borne Pathogen exposure control

3. Proper evacuation of the building
4. How to run the equipment in the building (i.e. sound, computers, screens, etc.)

4-11-8 **Lost and Found Policy:** Syracuse City employees shall not be responsible for any lost or stolen personal property missing from any part of the building. City staff or guests should turn in found items to the front desk area of the Community Development or Utilities departments for safekeeping until such time as an owner claims them or 30 days pass from the time the finders turned in such items, after which City staff shall donate them to a nonprofit organization.

4-11-9 **City Hall Rental Policies:**

(A) Renters shall arrive at least 15 minutes prior to the event in order to meet with City staff and walk through the lobby and restrooms, and Council Chambers when applicable, and provide and receive instructions on expected activities during the reserved time.

(B) Renters shall sign an inspection sheet immediately prior to the onset of their event to ensure factual recordation of the building's conditions.

(B) The rental period includes set-up and take-down time.

(C) Cleaning supplies shall be available for patrons' use at the end of events to ensure building is left in its pre-existing condition as per the inspection report. Renters shall bag and remove all decorations, garbage, etc. A dumpster shall be available for use in the southeast corner of parking area.

(D) No one shall enter the Council Chambers with food or beverages at any time, use fog machines, candles, or have open flames of any kind, or bring animals inside any area of City Hall that are not certified assistance pets. No one shall enter the building without being fully clothed, including shoes and shirt, or with roller blades, skateboards, or other like items for recreational use. Patrons found to be in violation of any rules of City Hall shall leave upon request.

(E) Immediately following the event, renter shall participate in an exit inspection with City staff to record and compare the building's conditions and establish reasonable charges against the deposit amount when deemed necessary. City staff will then prepare an invoice or begin processing payment to the responsible party for the balance of their deposit, when applicable, which may take 7-10 business days for mailing. Renter shall be responsible for any violations of conduct committed by guests while using the building.

4-11-10 **Refund Policy:** All refund requests will be charged a $20 administrative fee. Refunds may take 7-10 business days for mailing.

SYRACUSE CITY HALL RENTAL AGREEMENT

1979 West 1900 South
Syracuse, UT 84075
801-825-1477

Renter's Information	**Application Date:**
Phone Nos.:	
Email Address:	Mailing Address:
Purpose of Event:	Rental Date:
Number of Guests:	Rental Times:

Purpose. The purpose of City Hall is to conduct the business needs of City residents and provide available amenities to the community to enjoy during those times when it is not otherwise in use. In order to promote the orderly and harmonious use of the lobby and Council Chambers, the following outlines the procedures and rules as well as rental fees as established and adopted in the City's fee schedule. Deposits and rental fees are solely for the purpose of ensuring that these public amenities remain in good condition and to cover expenses incurred by municipal staff in overseeing reserved events and providing emergency services as necessary.

Building Availability: The City Manager reserves the right to withhold reservations for any given day during the period of availability for any City-sponsored event or if the City Manager determines that the building requires maintenance, cleanup, repair, other work of an extraordinary nature or the unavailability of required City personnel. Facility rentals shall be available Mondays-Fridays, from 5:00 to 11:00 p.m., and Saturdays, from 8:00 a.m. to 11:00 p.m., but no holidays, Interested parties shall not rent any portion of City Hall for events requiring the purchase of tickets or the payment of fees.

Building Rental Process and Fees: Reservations shall be made in person through the ( ) Department, during regular business hours, in half-hour increments. Renters shall be responsible adults, 18 years or older, and on site for the entire event. City staff will accept reservations on a first-come first-served basis, and deposits and applicable rental fees are due upon submittal of application. Any person/ group may rent the Chambers and/or lobby with the following conditions:

(A) Schedule for an available date and sign a building-rental agreement form
(B) Pay a deposit at time of scheduling, refunded if facility is left clean and undamaged
(C) Pay the hourly rate, as shown below:

LOBBY

Small Events (<25 persons – no food or beverages)
Resident: $50.00 deposit and $35.00 per hour staffing
Non-Resident: $75.00 deposit and $40.00 per hour staffing
Small Events (<25 persons – with food and/or beverages)
Resident: $100.00 deposit and $40.00 per hour staffing
Non-Resident: $150.00 deposit and $45.00 per hour staffing
Large Events (>25 persons – no food or beverages)
Resident: $300.00 deposit and $45.00 per hour staffing
Non-Resident: $450.00 deposit and $50.00 per hour staffing
Large Events (>25 persons – with food and/or beverages)
Resident: $300.00 deposit and $50.00 per hour staffing
Non-Resident: $450.00 deposit and $55.00 per hour staffing

COUNCIL CHAMBERS

Small Events (<25 persons – no food or beverages)
Resident: $100.00 deposit and $35.00 per hour staffing
Non-Resident: $150.00 deposit and $40.00 per hour staffing
Large Events (>25 persons – no food or beverages)
Resident: $300.00 deposit and $40.00 per hour staffing
Non-Resident: $450.00 deposit and $45.00 per hour staffing

LOBBY AND COUNCIL CHAMBERS
Small Events (<25 persons – no food or beverages)
Resident: $150.00 deposit and $35.00 per hour staffing
Non-Resident: $200.00 deposit and $40.00 per hour staffing
Small Events (>25 persons – with food and/or beverages in lobby)
Resident: $200.00 deposit and $40.00 per hour staffing
Non-Resident: $250.00 deposit and $45.00 per hour staffing
Large Events (>25 persons – no food or beverages)
Resident: $350.00 deposit and $50.00 per hour staffing
Non-Resident: $400.00 deposit and $55.00 per hour staffing
Large Events (>25 persons – with food and/or beverages)
Resident: $450.00 deposit and $55.00 per hour staffing
Non-Resident: $500.00 deposit and $60.00 per hour staffing

All events/activities must be legal and be in conformance with all Syracuse City Ordinances

Alcoholic Beverages, Drugs, Smoking, or Gambling: The City prohibits the sale, consumption, or possession of intoxicating liquors or beverages and dangerous or narcotic drugs, and smoking or gambling of any kind in City Hall.

Nuisances: It shall be unlawful for anyone to use threatening, abusive, insulting, or indecent language, to commit any obscene or indecent act, to fight, or to create a public disturbance or nuisance within or on City Hall premises. Anyone who loiters in or at City Hall while under the influence of alcohol or drugs or who otherwise disturbs the peace of others at any City municipal building by begging, soliciting, making undue noise, or engaging in disruptive activities shall be deemed as creating a public nuisance.

Safety and Security: During reserved events, at least one City employee shall be present in case of any emergency. Staff shall supervise events, run City equipment if needed, and provide assistance in emer-gencies, such as first aid/CPR, blood-born pathogen exposure control, and proper evacuation of building.

Lost and Found Policy: City staff shall not be responsible for lost or stolen personal property from the building. Staff or guests should turn in found items to the front desk area of the Community Development or Utilities departments for safekeeping until an owner claims them or 30 days pass from the time the finders turned in such items, after which staff shall donate them to a nonprofit organization.

City Hall Rental Policies:
(A) Renters shall arrive at least 15 minutes prior to event in order to meet with City staff and walk through lobby and restrooms, and Council Chambers when applicable, and provide and receive instructions.
(B) Renters shall sign an inspection sheet immediately prior to the onset of their event to ensure factual recordation of the building's conditions.
(B) The rental period includes set-up and take-down time.
(C) Cleaning supplies shall be available for patrons' use at the end of events to ensure building is left in its pre-existing condition as per the inspection report. Renters shall bag and remove all decorations, garbage, etc. A dumpster shall be available in the southeast corner of parking lot.

(D) No one shall enter the Chambers with food or beverages at any time, use fog machines, candles, or have open flames, or bring animals inside any area of City Hall that are not certified assistance pets. No one shall enter the building without being fully clothed, including shoes and shirt, or with roller blades, skateboards, or other like items for recreational use.

(E) Immediately following the event, renter shall participate in an exit inspection with staff to record and compare building's conditions and establish reasonable charges against deposit amount when necessary. Staff will then prepare an invoice or begin processing payment to renter for balance of deposit, when applicable, which may take 7-10 business days for mailing. Renter shall be responsible for any violations of conduct committed by guests while using building.

Refund Policy: All refund requests will be charged a $20 administrative fee. Refunds may take 7-10 business days for mailing.

_____ _____

Signature of Renter Date

SYRACUSE CITY HALL
PREPARATORY INSPECTION SHEET

1979 West 1900 South
Syracuse, UT 84075
801-825-1477

☐ Lobby floor and rugs_____

☐ Fountain, wall, rocks, and plants_____

☐ Lobby walls and pictures_____

☐ Lobby windows and glass doors_____

☐ Lobby furniture_____

☐ Lobby ceiling_____

☐ Drinking fountain_____

☐ Men's restroom_____

☐ Women's restroom_____

☐ Council chambers carpet_____

☐ Council chambers seats and furniture_____

☐ Council chambers rolling chairs_____

☐ Council chambers walls_____

☐ Council chambers jury seats_____

☐ Council chambers microphones and computer screens_____

☐ Council chambers ceiling_____

_____ _____

Signature of Renter Signature of City employee

SYRACUSE CITY HALL
EXIT INSPECTION SHEET

1979 West 1900 South
Syracuse, UT 84075
801-825-1477

☐ Lobby floor and rugs_____

☐ Fountain, wall, rocks, and plants_____

☐ Lobby walls and pictures_____

☐ Lobby windows and glass doors_____

☐ Lobby furniture_____

☐ Lobby ceiling_____

☐ Drinking fountain_____

☐ Men's restroom_____

☐ Women's restroom_____

☐ Council chambers carpet_____

☐ Council chambers seats and furniture_____

☐ Council chambers rolling chairs_____

☐ Council chambers walls_____

☐ Council chambers jury seats_____

☐ Council chambers microphones and computer screens_____

☐ Council chambers ceiling_____

_____ _____

Signature of Renter Signature of City employee

*Remove all items brought in for event and bag and remove all garbage from lobby and/or chambers.

TITLE VIII

SUBDIVISION ORDINANCE

CHAPTER 1

PURPOSE

8-1-1: **General Purpose**

8-1-2: **Public Interest**

8-1-3: **Variations—Exception**

8-1-4: **Building Official**

8-1-1: **GENERAL PURPOSE.** The purpose and intent of this Chapter is to promote the public health, safety, convenience and general welfare of the inhabitants of the incorporated through provisions designed to: territory of Syracuse City in the matter of subdivision or matters affected by subdivisions

1. Provide for the harmonious and coordinated development of the City, and to assure sites suitable for subdivision development and human habitation.

2. Ensure adequate open space for traffic, recreation, light and air.

3. Facilitate the conservation or production of adequate transportation, water, sanitation, drainage and energy resources.

4. Avoid scattered and premature subdivision that would cause insufficient public services and facilities, or necessitate an excessive expenditure of public funds for the supply of such services and facilities.

5. Ensure utilization of the land in the best interest of the public welfare and the neighborhood deployment of the area concerned.

6. Preserve outstanding natural, cultural or historic features.

B. This chapter is designed to inform the subdivider and public of the requirements and conditions necessary to obtain approval of a subdivision. To this end, all requirements, where possible, are expressly delineated in this Title or other applicable ordinances. However, since it is impossible to cover every possibility, and there are some aspects which do not lend themselves to being easily articulated, this Title allows the Planning Commission and City Council to impose reasonable conditions upon a subdivider in addition to those expressly required, so long as such conditions do not conflict with any requirements set forth in this Chapter or other applicable ordinances. (1997)

8-1-2: **PUBLIC INTEREST.** Any proposed subdivision and its ultimate use shall be in the best interest of the public welfare and the neighborhood development of the area concerned. The subdivider shall present evidence to this effect when requested to do so by the Planning Commission. (1997)

8-1-3: **VARIATIONS/EXCEPTION.** In cases where unusual topographical or other exceptional conditions exist, variation and exception from this Ordinance may be made by the City Council after recommendation by the Planning Commission. (1997)

8-1-4: **BUILDING OFFICIAL.** Appointment. There is hereby created the position of Building Official who shall be appointed by the City Manager. (Ord. 11-12)

1. Duties. It shall be the duty of the Building Inspector to see to the enforcement of all ordinance provisions relating to buildings or zoning, and to inspect all buildings or structures being erected or altered, as frequently as may be necessary to insure compliance with the City ordinances. The Building Inspector shall also act as plumbing inspector and electrical inspector and shall have all the powers and perform all the duties connected therewith. (Ord. 11-12)

2. Permits. The Building Inspector shall issue permits for the construction, alteration or repair of structures or parts thereof and for the repair or installation of plumbing and electrical facilities or fixtures within any structure; but no permit shall be issued unless the plans of and for the proposed construction, alteration, repair, installation or use, fully conform to all City regulations then in effect. (Ord. 11-12)

3. Stop Order. The Building Inspector shall have the power to order all work stopped on construction or alteration or repair of building in the City when such work is being done in violation of any provision of any ordinance relating thereto. Work shall not be resumed after the issuance of such an order except on the written permission of the Inspector; provided, that if the stop order is an oral one, it shall be followed by a written stop order within an hour. (Ord. 11-12)

4. Entry powers. The Building Inspector shall have the power to make or cause to be made an entry into any building or premises where the work of altering, repairing or constructing any building or structures is going on, for the purpose of making inspections, at any reasonable hour. (Ord. 11-12)

5. Additional Duties. The City Building Official shall perform such other and further duties as the City Council may provide by ordinance, resolution, or regulation. (Ord. 11-12)

CHAPTER 2

GENERAL PROVISIONS

8-2-1: **Definitions**

8-2-2: **General Requirements**

8-2-3: **Security of Performance**

8-2-4: **Fee Payment**

8-2-5: **Parks, Open Space and Other Public Spaces**

8-2-6: **Adjacent Streets**

8-2-7: **Relation to Adjoining Street Systems**

8-2-8: **Irrigation Water**

8-2-9: **Extension of Public Work Facilities**

8-2-10: **Second Access Required**

8-2-11: **Mandatory Use of City Water and Sewer Systems**

8-2-12: **Appeals**

8-2-13: **Written Agreements**

8-2-14: **Guidelines and Checklists**

8-2-15: **Fees and Recording**

8-2-16: **Issuance of Building Permit**

8-2-17: **Occupancy of a Dwelling**

8-2-18: **Subdivision Phases**

8-2-1: **DEFINITIONS.** The following terms used in this title shall have the respective meanings hereinafter set forth:

ALLEY: Any public way or thoroughfare less than 16 feet but not less than 10 feet in width, which has been dedicated or deeded to the public for public use.

BENCH MARK: A mark affixed to a permanent or semi-permanent object along a line of survey to furnish a datum level.

BLOCK: A piece of land bordered by streets or other rights-of-way, and or which is designated as a block on any recorded sub-division plat.

BUILDING OFFICIAL: The officer or other designated authority charged with the administration and enforcement of uniform codes, and the inspection of all subdivision improvements, or the building officials duly appointed representative.

CITY: Refers to Syracuse City.

CITY COUNCIL: The City Council of Syracuse.

CITY ENGINEER: Any registered civil engineer hired by the City Council to accomplish the objectives of this ordinance provided that no such person may serve the City and a subdivider simultaneously where he would have to check his own work or the work of a member of his firm in connection with any subdivision in the City.

CONDOMINIUM: The ownership of a single unit in a multi-unit project together with undivided interest in common in the common areas and facilities of a property as provided by State law.

CONSTRUCTION: Any work or product which will become the property of the City; i.e., roads, curb and gutter, sidewalks, water works, sewer works, culverts, bridges, fencing, etc.

CONTRACTOR: The person in charge of construction. He could also be the subdivider.

CUL-DE-SAC: A minor street having only one outlet being terminated at the other end by a vehicular turnaround.

DRIVEWAY: A private roadway, the use of which is limited to persons residing, employed or otherwise using or visiting the lot on which the roadway is located.

EASEMENT: The quantity of land set aside or over which a liberty, privilege or advantage in land without profit, existing distinct from the ownership of the land, is granted to the public or some particular person or part of the public.

FINAL PLAT: A subdivision map prepared in accordance with the provisions of this ordinance that is accurately surveyed and such survey marked on the ground so that the streets, alleys, blocks, lots and other divisions thereof can be identified and which is designated to be placed on record in the office of the County Recorder.

IMPROVEMENT DISTRICT: Is as defined by Utah State law.

IMPROVEMENTS: Work objectives, devices, facilities, or utilities required to be constructed or installed in a subdivision. Such improvements may include but are not limited to water facilities, sewer facilities, sidewalks, curbs and gutters, drainage facilities, streets, trees, street signs, street lights, traffic control or safety devices, fire hydrants and such other facilities or construction required by the subdivision ordinance.

INSPECTOR: The authorized inspector or representative of the City Council.

LOT: A portion of the subdivision or parcel of land intended for building development or transfer of ownership.

MASTER PLAN: A long-range general plan that identifies present and future needs of Syracuse City, which outlines growth and development of land within the City and provides for health, general welfare, and safety as outlined in Section 10-9-301 et seq, Utah Code Annotated, 1953, as amended.

MAY: Is permissive.

OPEN SPACE: Shall mean any area within the subdivision that has been designated as open to meet the requirements of development

OWNER: Shall mean and refer to the person, corporation, partnership or other entity in which is vested the fee simple, title of the property to be subdivided, unless otherwise clearly indicated, or the owners designee.

PERSON: Any individual, firm, partnership, associate, entity, institution, or corporation and their heirs, assigns, or agents.

PLANNING COMMISSION: Shall mean the Syracuse City Planning commission unless another Planning commission is specifically named.

PRELIMINARY PLAT: A map or plan of a proposed land division or subdivision prepared in accordance with the requirements of this ordinance.

SHALL: Is mandatory

SKETCH PLAN: A conceptual drawing of the proposed development prepared in accordance with the requirements of this ordinance.

SMALL SUBDIVISION: The division of a tract or lot or parcel of land into two, but not more than 9 lots, plots, sites or other divisions of land for the purpose, whether immediate or future, of sale or of building development, wherein all such divisions front on an existing street.

SPECIFICATIONS: To be interpreted as rules and regulations.

STREET, ARTERIAL: A street existing or proposed, which serves or is intended to serve as a major traffic way, as a controlled access highway, major street parkway or other equivalent term to identify those streets comprising the basic structure of the street plan.

STREET, LOCAL: A street existing or proposed which is supplementary to a collector street and of limited continuity which serves or is intended to serve the local need of a neighborhood.

STREET, MAJOR COLLECTOR : Shall mean a street with a right-of way 72 feel, designated in the general plan to carry larger volumes of traffic to arterial streets.

STREETS, MINOR COLLECTOR: A street existing or proposed with a 66' right-of-way, which carries traffic from local subdivision streets to the major collectors

SUBDIVISION: Any land that is divided, resubdivided or proposed to be divided into two or more lots, parcels, sites, units, plots, or other division of land for the purpose, whether immediate or future, for offer, sale, lease, or development either on the installment plan or upon any and all other plans, terms, and conditions. "Subdivision" includes:

1. The division or development of land whether by deed, metes and bounds description, devises and testacy, lease, map, plat, or other recorded instrument: and

2. Divisions of land for all residential and non residential uses, including land used or to be used for commercial, agricultural, and industrial purposes.

SUBDIVISION REQUIREMENTS: Are those that are adopted by the various governing bodies in the City for the necessary proper development of a proposed subdivision.

SUBDIVIDE: And any derivative thereof shall have reference to the term subdivision as herein defined.

SUBDIVIDER: One who subdivides a parcel of land and may also be referred to as a developer.

WALKWAY: A right-of-way designed for use by pedestrians and not intended for use by motor vehicles of any kind.
WET LANDS: Any area that has the potential to support wildlife and the capability of natural water filtration whether naturally or man made.

ZONING: The most recent zoning ordinances adopted by Syracuse City. (1997)

8-2-2 GENERAL REQUIREMENTS

A. Scope. This section defines the general requirements for improvements to be built by the Subdivider.

The improvements shall include all street improvements in front of all lots and along all dedicated streets to the connection with existing improvements of the same kind or to the boundary of the subdivision nearest existing improvements. Layout must provide for future extension to adjacent development and be compatible with the contour of the ground for proper drainage. All water lines, sewer lines, and any other buried conduit shall be installed to the boundary lines of the subdivision.

B. Standards for Construction Drawings. The following instructions are for the purpose of standardizing the preparation of drawings to obtain uniformity in appearance, clarity, size, and style. All drawings and/or prints shall be clear and legible and conform to good engineering and drafting room practice. Size of drawings shall be 22" x 34" (trim line) with 1/2" border on top, bottom and right sides. Left side shall be 1 1/2".

(1) In general the following shall be included on drawings:

(a) North arrow (plan).
(b) Scale and elevations referenced to City datum.
(c) Stationing and elevations for profiles.
(d) Title block, located in lower right corner of sheet, to include:
  (i) Name of City
  (ii) Project title (subdivision, etc.).
  (iii) Specific type and location of work.
(e) Space for approval signature of City Engineer and date.
(f) Name of engineer or firm preparing drawings with license number and signature.

(2) Curb and gutter, drains and drainage structures, signing, lighting sidewalks, and street surfacing shall show:

(a) Scale: 1" = 20' or 50' horizontal; 1" = 2' or 5' vertical.
(b) Both plan view and profile. Street center line.
(c) Stationing and top of curb elevations with curve data must be shown for all curb returns. Show top of curb elevation on both sides on even stations (50 FT. Sta. Max.).
(d) Flow direction and type of cross drainage structures at intersections with adequate flow line elevations.
(e) Bench Mark location and elevation (use City datum).
(f) Bedding Details

(3) Sewer drawings shall show:

(a) Scale: 1" = 20' or 50' horizontal; 1" - 2' or 5' vertical.
(b) Location, size, and grade of all lines except individual services.
(c) Manhole details, size, location, and flow line elevation.
(d) Type of pipe.
(e) Bench Mark location and elevation (use City datum).
(f) Bedding Details.

(4) Culinary and secondary water drawings shall show:
(a) Size and location of water mains, valves, hydrants, tees, etc.
(b) Type of pipe.
(c) Minimum cover.
(d) Bedding Details

(5) Each set of plans shall be accompanied by a separate sheet of details for structures which are to be constructed. All structures shall be designed in accordance with minimum requirements established by the Syracuse City Subdivision Standards.

(a) Drawing size: 22" x 34" (trim line).
(b) Scale of each detail.
(c) Title block, lower right hand corner (same format on all sheets), including the name of the subdivision.
(d) Completely dimensioned and described.

C. Construction and inspection. No construction of public improvements shall proceed until the final plat has been approved by the City Council and filed for record in the office of the County Recorder, except that the City Council may conditionally approve the installation of off-site improvements as described in Section 8-7-3(D)(1). All public improvements shall be completed within one year of the date the final plat was approved, and the Building Official shall inspect the construction as it proceeds. A construction punch list shall be made up by the Building Official indicating the items missed or needing correction prior to acceptance of the improvements by the Building Official, and all required replacements or repairs shall be completed by the subdivider, at his expense, prior to acceptance by the City.

D. As Built Drawings. At the completion of construction, or at the end of one year, whichever comes first, the Building Official shall make an inspection of all improvements and inform the Developer and City Administrator of the results of the inspection. At the completion of construction, the subdivider shall call for inspection

by the Building Official and said inspection shall be made within ten (10) days of the request thereof. The developer shall provide the City with record drawings accurately defining for permanent record the surface improvements and underground utilities as they were actually constructed and shall provide one mylar copy, which indicates any changes from the original approved final drawings. All sewer and land drain manhole flow lines shall be verified.

E. Inspection. All construction work involving the installation of improvements in subdivisions shall be subject to inspection by the City Building Official. Certain types of construction shall have continuous inspection, while others shall have periodic inspections. The City may request the services of the City Engineer to assist in inspection if it is deemed necessary.

(1) To cover the cost of inspection and management of off-site improvements, the subdivider shall pay a fee to the City based on the linear feet of improvements installed, the number of building lots in the subdivision, and the average number of hours spent inspecting off-site improvements. Said fee shall be established by resolution of the City Council. Said fee shall be paid prior to recordation of the subdivision plat.

(2) The Community Development Director or his designee shall insure that all off-site inspections are installed in accordance with approved subdivision standards prior to acceptance by the City.

(3) On construction requiring continuous inspection, no work shall be done except in the presence of the City Inspector. Continuous inspection may occur on the following types of work:

(a) Preparation of street subgrade and compacted fill.
(b) Laying of street surfacing.
(c) Pouring of concrete for curb and gutter, sidewalks, and other structures.
(d) Laying of sewer pipe, drainage pipe, water pipe, valves, hydrants, and testing.

(4) Periodic inspections shall be required on the following:

(a) Street grading and gravel base.
(b) Excavations for curb and gutter and sidewalks.
(c) Excavations for structures.
(d) Trenches for laying pipe.
(e) Forms for curb and gutter, sidewalks, and structures. (Ord 05-12)

F. Requests for Inspection. Requests for inspections shall be made to the City by the person responsible for construction. Requests for inspection on work requiring continuous inspection shall be made three (3) days prior to the commencing of the work. Notice shall be given one (1) day in advance of the starting of work requiring periodic inspection.

G. Construction Completion Inspection. An inspection shall be made by the City Inspector after receiving a written document from the Developer that all work is completed. Attached to this document the developer's engineer shall prepare a statement that all sanitary sewers have been tested for exfiltration/infiltration and they have passed the requirements herein.

H. Guarantee of Work. The subdivider shall warrant and guarantee (and post bond or other security) that the improvements provided for hereunder, and every part thereof, will remain in good condition for a period of two (2) years after the date of the construction completion inspection report by the City Inspector and shall agree to make all repairs to and maintain the improvements and every part thereof in good condition during that time with no cost to the City.

It is further agreed and understood that the determination for necessity of repairs and maintenance of the work rests with the City Inspector. His decision upon the matter shall be final and binding upon the subdivider, and the guarantee hereby stipulated shall extend to and include, but shall not be limited to, the entire street base and all pipes, joints, valves, backfill and compaction, as well as the working surface, curbs, gutters, sidewalks, and other accessories that are, or may be affected by the construction operations, and whenever, in the judgement of the City Inspector, said work shall be in need of repairs, maintenance, or rebuilding, he shall cause a written notice to be served the subdivider, and thereupon the subdivider shall undertake and complete such repairs, maintenance, or rebuilding. If the subdivider fails to do so within ten (10) days from the date of service of such notice, the City Inspector shall have such repairs made, and the cost of such repairs shall be paid by the subdivider, together with 15 percent in addition thereto as and for stipulated damages for such failure on the part of the subdivider to make the repairs.

I. Acceptance of Materials. Material such as, but not limited to, bituminous products, Portland cement, steel, pipe gaskets, joints filler, fire hydrants and other similar commercially produced products will be accepted by the City upon submission by the subdivider of a supplier certification that the material meets specifications. These materials shall not be incorporated into the project until such certification has been received and approved in writing by the City Inspector.

J. Samples and Tests. Materials, equipment, and workmanship shall be subject to sampling or testing by the City. At the option of the Inspector, materials shall be subject to tests and inspection before such materials are used in the work. Representative preliminary samples of the character and quality prescribed shall be submitted without charge by the contractor or producer of materials to be used in the work in sufficient quantities or amounts for testing.

All tests of materials furnished by the contractor shall be made in accordance with the commonly recognized standards of National technical organizations and such special methods and tests as are prescribed herein.

K. General.

(1) Approval of plans and specifications by the City Engineer on a submitted project will extend for a period of six months. If no work has been performed on such project within a period of six months following initial approval, the plans must be re-submitted and become subject to re-approval under the latest City standards and specifications.

(2) Final acceptance of any or all work is contingent upon (1) an on-the-site inspection as the work progresses, (2) a reproducible "as built" plan having been submitted, and (3) a final inspection of the site.

(3) All utilities, private or publicly owned, shall be placed underground unless otherwise approved or specified by the City. This will include, but not be limited

to, telephone, gas, electric power, water, sewer, storm drains, etc. These underground utilities shall be installed before the surfacing of the streets and installation of road base, curb and gutter, sidewalks, etc.

(4) It is the sole responsibility of the contractor to:

(a) Secure any and all permits required for completion of the project.

(b) Provide for the safety and protection of all those engaged in the project, not allowing any unsafe conditions to exist.

(c) Acquire materials and produce workmanship which conforms to the City standards and specifications. Sub-standard installations and materials are subject to removal and replacement at the contractor's expense.

(d) Have all work performed in a manner acceptable by the City Inspector.

(5) No project can receive final approval until the workmanship and materials are in compliance with City standards and specifications. This includes accurate and proper placement of survey monuments and acceptable clean-up of area.

(6) All items not mentioned within these standards and specifications related to road work will be performed in accordance with the most recent edition of "State of Utah Standard Specifications for Road and Bridge Construction" by the State Road Commission.

(7) The burden of proof to justify any variance to the standards and specifications contained herein shall be at the expense of the petitioner. Final acceptance will be by the City Engineer.

(8) Adoption of these standards and specifications in no way alleviates the responsibility of the developer to practice good sound engineering and construction practices in all phases of his work. It is the intent of these standards and specifications to provide uniformity, continuity and eventual lessening of unnecessary maintenance expenses to the City.

(9) Where these standards and specifications are in conflict with adopted City ordinances, the most restrictive will apply.

(10) These standards and specifications are subject to revision, modification, additions or changes without notice, by reference to the Subdivision Ordinance and approval by the majority of the City Council. (1997)

8-2-3 SECURITY OF PERFORMANCE

A. A Subdivision plat shall not be recorded until the subdivider shall have furnished to the City a Security of Performance, acceptable to the City and as set forth below, in an amount set by the City Engineer and equal to at least 1.1 times the reasonable value of unfinished improvements required herein. The Security of Performance required by this section, and at the City's discretion, may be furnished by any of the following methods:

(1) By providing a surety or cash bond in the amount specified herein and conditioned upon payment by the subdivider of all expenses incurred for labor or material used in the construction of required improvements.

(2) By depositing the specified amount of cash in a bank account to which the City alone has access, but only in the event it becomes necessary, in order to complete, repair or replace the improvements as set forth below.

(3) By depositing the specified amount of cash in a supervised bank account to which the Subdivider has access, with the approval and signature of the City, which funds shall be used to pay for the subdivision improvements as construction is completed and evidence that no liens have been placed on the construction project. In the event it becomes necessary for the City to foreclose on the Security of Performance and move to complete, repair or replace the improvements as set forth below, then the City shall have access to said supervised bank account for the purpose of completing, repairing, or replacing improvements without the necessity of obtaining the approval of the subdivider.

(4) By any other method that is acceptable to the City, provided that the City's interests in assuring that the work required herein is paid for, inspected and completed in conformance with City standards are protected. (Ord 05-12)

B. The Security of Performance required by this section is to assure the City that all improvements are constructed in conformance with all relevant City ordinances, regulations, and standards, and to assure the City that all expenses incurred for labor or material used in the construction of the same are paid for by the Subdivider. Further, the City may retain 10 percent of the Security of Performance Guarantee provided by the subdivider until two years following the final inspection by the Building Official, or for such other period of time less than two years as the City deems necessary to insure compliance as set forth herein. (Ord 05-12)

C. In the event construction of the public improvements is not completed or is not completed in a satisfactory manner one year from the date the final plat was approved by the City Council, the City may proceed to install the improvements in a satisfactory manner at the subdivider's expense by foreclosing on at the subdivider's "Security of Performance" held by the City.

In the event the public improvements fail to meet the standards as set forth in the subdivider's written guarantee, the City shall so notify the subdivider who shall be given a reasonable time to repair or otherwise correct as requested. The City may proceed to repair or replace the unsatisfactory improvements at the subdivider's expense by foreclosing on any Security of Performance still held by the City; and, in addition, the City may avail itself of any other remedy provided to it under the laws of the state of Utah and of the City of Syracuse. In addition to any other remedies stated herein, the city shall not approve additional phases for development if the subdivider has not completed improvements in a satisfactory manner within one year from the date of final plat approval.

8-2-4: **FEE PAYMENT** All fee schedules shall be established by the City Council by means of a resolution. Such fee schedules and the periodic adjustments thereof shall be a part of this ordinance by reference. (1997) (See Resolution R97-3)

8-2-5: **PARKS, OPEN SPACE, AND OTHER PUBLIC SPACES**

(Ord. 01-02) (Ord. 02-19) (Ord. 11-10)

A. Location of parks and other public spaces. The City shall require a minimum of 6.6 acres of property for parks or other public spaces for every 1000 population throughout the city. The location of parks shall be determined by the City as identified in the Syracuse City General Plan. Developers will be required to work with the City to obtain park property within the development where placement of parks have been identified.

B. Park Purchase Fee. In order for the City to obtain property for parks and other public spaces, the developer shall contribute to the City six and six tenths percent (6.6%) of the appraised value of land being developed, which shall be used to purchase property for parks and other public spaces in the City. This assessment shall be made on each phase of development. The City may require the developer to donate six and six tenths percent (6.6%) of the property being developed should the City desire a park or other public space in that location. The amount of the Park Purchase fee shall be determined from a third party MAI (Member of the Appraisal Institute) designated appraisal requisitioned yearly by the City. The developer shall pay a nominal fee as determined by the City Council to defray the cost of the appraisal. The developer may accept the City's MAI appraisal or may procure and submit to the City an MAI appraisal of the subdivision property.

8-2-6: **ADJACENT STREETS.** It shall become the responsibility of the Developer to complete all of the necessary public improvements on streets adjacent to his proposed development. This shall include reasonable landscaping of park strips, as approved by the city, when a new street placed is adjacent to an existing lot, which becomes a corner lot because of placement of the road. This shall be done at the subdivider's sole expense. (Ord. 03-25)

8-2-7: **RELATION TO ADJOINING STREET SYSTEMS.** The arrangement of streets in new subdivisions shall make provision for the continuation of the existing streets in adjoining areas (or their proper protection where adjoining land is not subdivided) at the same or greater width (but in no case less than the required minimum width) unless the variations are deemed necessary by the Planning Commission for public requirements.

Street access for new subdivisions shall be established by using the AASHTO Traffic Design Manual calculation of 7.5 seconds of travel time between street accesses onto existing roadways, (which calculated would be 385 feet at 35 mph) unless otherwise recommended by the Planning Commission. The street arrangement must be such as to cause no unnecessary hardship to owners of adjoining property when they plat their land and seek to provide for convenient access to it. Where, in the opinion of the Planning Commission it is desirable to provide for street access to adjoining property, proposed streets shall be extended by dedication to the boundary of such property. Half streets along the boundary of land proposed for subdivision will not be permitted. (1999)

8-2-8: **STREET LIGHTS.** The placement of streetlights shall be included as part of the subdivision development. Developers shall be responsible to install or have installed, streetlights in accordance with adopted Construction Specifications.

Placement of streetlights shall be at each intersection within the development and at the end of each cull-de-sac, providing that the end of the cul-de-sac is at least 400 feet from the entrance thereof. (Ord 02-19)

8-2-9: **IRRIGATION WATER.** Due to the need of providing irrigation water for subdivision development, the City has estimated the impact of subdivisions on the area's water supply. Factors including the Cit's climate, temperature, precipitation, evapotranspiration rate, length of irrigation season, and soil type dictate that each acre of irrigable property requires roughly four acre feet (4 a.f.) of water annually during normal water years. (Ord 04-23) (Ord. 12-25)

A. **Residential Subdivisions.** Based on extensive experience with residential subdivisions, the City has calculated that the nature and extent of a residential subdivision's impact on the water supply is roughly proportionate to three acre feet (0.75 x 4 a.f.) of water annually for each acre or part thereof within the subdivision during normal water years. Therefore, a residential developer shall convey to the City water rights that have been customarily used on the property to be developed that are usable by and acceptable to the City to provide 0.75 x 4 a.f. for each acre or part thereof within the subdivision. In the event there are no owner water rights on property to be developed, the developer shall obtain and convey water rights acceptable and usable by Syracuse City. (Ord. 12-25)

B. **Nonresidential Subdivisions.** The nature and extent of a nonresidential subdivision's impact on the water supply varies widely based on the amount of the subdivision that remains irrigable acres. Accordingly, a nonresidential developer shall convey to the City water rights that have been customarily used on the property to be developed that are usable by and acceptable to the City to provide 4 a.f. for each irrigable acre or part thereof within the subdivision. In the event there are no owner water rights on property to be developed, the developer shall obtain and convey water rights acceptable and usable by Syracuse City. No water rights shall be conveyed for full acres of asphalt or other non-permeable surfaces. (Ord. 12-25)

C. **Exactions to Cease Upon Excess Supply.** Every five years the Public Works Director shall determine whether the City's existing available water interests exceed the water interests needed to meet the amount of water needed in the next 40 years by the persons within the City's projected service area based on projected population growth and other water use demand ("reasonable future water requirements.) Should the Director conclude that available water interests exceed the reasonable future water requirements of the public, the Public Works Director shall notify the City Council and the City Council shall act to cease exacting water shares from any further developers until existing available water interests no longer exceed the reasonable future water requirements. (Ord. 12-25)

8-2-10: **EXTENSION OF PUBLIC WORK FACILITIES.** The extensions of any City Public works facilities including but not limited to roads, bridges, storm drains, water mains, sewer lines, and secondary water systems, shall be installed by the developer of any subdivision. There shall be no consideration or return to the developer within this area. The City, however, will consider cost sharing on any water or sewer lines in excess of eight (8) inch diameter in the event the City desires to participate for future planning purposes. (Ord 02-19)

8-2-11: **SECOND ACCESS REQUIRED.** Providing for emergency response, all subdivisions having more than 35 homes shall have a minimum of two (2) ingress/egress roads, except that other acceptable alternatives for emergency accesses can be made and approved by both the Planning Commission and City Council. (Ord 05-12)

8-2-12: **MANDATORY USE OF CITY WATER, SECONDARY WATER AND SEWER SYSTEMS.** All subdivisions located within the corporate boundaries of the City of Syracuse shall be required to connect to the water and sewer systems of the City, any ordinance or resolution to the contrary notwithstanding. The City Council hereby expressly finds the

requirements of this Section and Section 8-2-9 to be in the best interests of the City and to promote the public health, safety, and general welfare of the residents thereof. (Ord 02-19)

8-2-13: **APPEALS.** Any applicant, member of the Planning Commission and/or property owner within 1,000 feet of proposed subdivision property shall have the right to appeal the action of the Planning Commission to the City within five (5) days of the date of such action. Any action taken and not appealed within said five (5) days shall be final. When a written appeal is received by the City within five (5) days of the time the action was taken, the City will publish notice of an appeal hearing fifteen (15) days prior to the scheduled date by posting the notice thereof at three public places within the City. Action by the City Council will be final. (Ord 02-19)

8-2-14: **WRITTEN AGREEMENTS.** When and as written agreements are deemed to be necessary for the protection and understanding of all parties concerned, then they shall be entered into by all parties concerned, i.e., to cover areas of concern not specifically addressed by the subdivision ordinance or other requirements of the City, and shall be submitted with the final plats to the Planning Commission and the City Council.

A. Payback Agreement.

(1) The City may enter into a payback agreement with a developer who installs improvements or facilities for water, secondary water, land drains, storm sewer, roads, or parks, where the improvements installed extend, expand, or improve the City's water, secondary water, land drains, sewer, storm sewer, roads, or parks, beyond the improvements required to service or benefit the subdivision or development proposed by the developer or where a developer installs improvements due to the layout or ownership of the land that benefit another landowner or developer who would or should in equity normally pay a portion of the improvements. The payback agreement is not mandatory, but may be used at the option of the City upon approval of the payback agreement by the City Council.

(2) The dollar amount of the payback to the developer shall be solely determined by the City under the direction of the City Engineer after consideration of the portion of the improvements or facilities installed that benefit developer's development, and the portion of the improvements or facilities that are specifically over-sized or installed to provide for future development or benefit other landowners or future developers.

(3) The City shall, in all cases, be immune and not liable for any payments to the developer if the payback agreement is determined to be unenforceable or if the City is not able to collect from future developers. At the time a payback agreement is entered into with a developer, the City shall record a notice against the benefited property with the County Recorders office, which notice shall inform the benefited landowners that at such time as they develop the benefited property they will be required to pay for a portion of the improvements previously installed.

(4) The payback agreement shall not confer a benefit upon any third party and shall be in a form approved by the City Administrator or his designee. The responsibility for payment of the required improvements or facilities shall rest entirely with the developer.

(5) The payback agreement shall expire ten years from the date of the payback agreement or at such time as the developer has recovered the costs specified in the payback agreement, whichever comes first.

(6) If any part of this ordinance is found to be invalid by a court of competent jurisdiction, or if the Legislature of the State of Utah should pass a law which would invalidate any portion of this ordinance, all parties to the payback agreement shall be released from further responsibility thereunder and shall be relieved from any and all responsibility thereunder.

8-2-15: **GUIDELINES AND CHECKLISTS.** The City is hereby authorized and empowered to promulgate by way of resolution certain guidelines and/or checklists relative to this ordinance. These materials shall be provided to any interested person upon request and upon payment of a fee specified by the City. These materials shall be for instructional purposes only and represent an attempt to aid those seeking to comply with this ordinance. In the event any conflict arises between such guidelines and this ordinance or other regulations, resolutions or policies of the City, then said ordinances, resolutions, regulations, or policies shall be deemed controlling and all questions shall be resolved in their favor. (1997)

8-2-16: **FEES AND RECORDING**

A. Utility connection fees and service assessments will be the established rate at the time application is made.

B. Recording fees will be the established rate at the time recording is made. (Ord 02-19)

8-2-17: **ISSUANCE OF BUILDING PERMIT**

(A) The following requirements shall be met prior to issuance of any building permit within a subdivision:

(1) All required fencing installed as a condition of subdivision approval in compliance with Syracuse City Zoning Ordinance;

(2) All water and sewer and drainage systems installed, inspected and tested;

(3) All curb and gutter installed;

(4) A minimum of 8 inches of road base in place and graded;

(5) All lots within the subdivision rough graded so that weeds and other vegetation can be maintained by the contractor;

(B) Contractors will be responsible to see that all construction materials and/or debris are continuously secured or removed from construction site in accordance with Syracuse City Ordinance, Chapter 6-1, Nuisances on Property. (Ord 02-19)

8-2-18: **OCCUPANCY OF A DWELLING.** All structures used for the purpose of residential dwelling shall meet the following guidelines prior to occupancy:

(A) All underground off-site improvements properly installed and operational as approved by Syracuse City.

(B) All required asphalt or concrete hard surface roadway installed and completed throughout the entire phase in which the dwelling is located in accordance with Syracuse City design standards. In the event that hard surface paving cannot be properly installed due to weather related circumstances, the developer may petition the City Council for conditional occupancy providing the following guidelines are met:

(1) Roadbase installed in accordance with Syracuse City design standards.

(2) Developer must maintain all roadbase surfaces providing for adequate vehicular accessibility and that the developers provide for services which will not be available due to the absence of paving.

(3) Required asphalt or concrete hard surface roadway shall be installed and completed as soon as weather related circumstances change or as directed by Syracuse City. (Ord 02-19)

8-2-19: **SUBDIVISION PHASES.** A subdivision containing more than thirty-six (36) lots shall be planned in subsequent phases and must follow the following requirements:

(A) The sketch plan must show the placement, numbering and boundaries of the phases within the subdivision.

(B) Any future alteration or deviation from the original sketch plan will require the submittal of an amended sketch plan.

(C) Design of each phase must be consistent with the Syracuse City's General Plan and this ordinance.

(D) Phases must be completed in such a manner as to provide sufficient services to existing and future development.

(E) Phase and lot numbering must be sequential and consistent to that approved in the Sketch Plan. (Ord 02-19)

8-2-20: **RESIDENTIAL DRIVEWAYS.** The arrangement of residential driveways on proposed subdivision lots fronting a collector or arterial street will be directed by the City Planning Commission. Driveways fronting collector or arterial streets will be constructed to allow semi-circular, pull-through, or hammerhead pull out residential driveways. (Ord 02-19)

CHAPTER 3

PUBLIC IMPROVEMENTS

8-3-1: **Design Standards**

8-3-2: **Local Minimum Standards & Specifications**

8-3-3: **Other General Standards**

8-3-1: **DESIGN STANDARDS.** The design of the final subdivision plat in relation to streets, blocks, lots, open spaces and other design factors shall be in harmony with design standards recommended by the Planning Commission and by other departments and agencies of city government. Design standards shall be approved by the City Council and shall include provisions as follows which are hereby approved by the City Council: (Ord. 12-10)

A. Blocks shall not exceed thirteen hundred twenty feet in length.

B. Dead-end streets, which exceed one lot depth in length, shall have a forty-foot (40') radius temporary turnaround area at the end. The turnaround shall have an all-weather surface acceptable to the City. (Ord. 03-10)

C. Blocks shall be wide enough to adequately accommodate a minimum of two lots.

D. Dedicated walkways through the block may be required where access is necessary to a point designated by the Planning Commission. Such walkways shall be a minimum of six feet in width, but may be required to be wider where determined necessary by the Planning Commission. The subdivider shall surface the full width of the walkway with a concrete surface, install a chain link fence or its equal at least four feet high on each side and the full length of each walkway and provide, in accordance with the standards, rules, and regulations, barriers at each walkway entrance to prevent the use of the walkway by any motor vehicle or by any non-motorized vehicle wider than four feet.

E. Blocks intended for business or industrial use shall be designated specifically for such purposes with adequate space set aside for off-street parking and delivery facilities.

F. The lot arrangement and design shall be such that lots will provide satisfactory and desirable sites for buildings, and be properly related to topography, to the character of surrounding development and to existing requirements.

G. All lots shown on the preliminary and final plats must conform to the minimum requirements of the zoning ordinance for the zone or proposed zone in which the subdivision is located, and to the minimum requirements of the County Board of Health for water supply and sewage disposal.

H. Each lot shall abut on a street shown on the subdivision plat or on an existing publicly-dedicated street. Double frontage lots shall be prohibited except where unusual conditions make other designs undesirable.

I. Side lines of lots shall be approximately at right angles, or radial to the street lines.

J. In general, all remnants of lots below minimum size must be added to adjacent lots, rather than allowed to remain as unusable parcels.

K. Subdivision boundaries shall include all property; no protection or holding strips will be allowed. All improvements shall be installed to the boundary of the subdivision.

L. Cul-de-sacs (a street having only one outlet that terminates at the other end by a vehicle turnaround) shall be no longer than five hundred (500) feet from the centerline of the adjoining street to the center of the turnaround. Each cul-de-sac must be terminated by a turnaround of not less than one hundred (100) feet diameter, measured to the property lines. (Ord. 12-10)

Exceptions to the maximum length of a cul-de-sac up to eight hundred (800) feet of a cul-de-sac may be granted by the City Council, after receiving a recommendation from the Planning Commission, and that an increased street length will not unreasonably impact the ability to provide emergency and other public services. To receive an exception in the maximum length, an applicant may be required to provide, but is not limited to, the following: (Ord.03-10) (Ord. 12-10)

(1) Written approval from Syracuse Police, Fire, and Public Works Departments. (Ord. 12-10)

(2) Looped water main providing a two-way feed. (Ord. 12-10)

(3) "Dead End" signage. (Ord. 12-10)

(4) Street light at the end of the cul-de-sac. (Ord. 12-10)

(5) Secondary emergency access and/or road width as required by Fire Department. (Ord. 12-10)

(6) Snow storage location at the end of cul-de-sac, unobstructed by hydrants, streetlights, utilities, mailboxes, trees, structures, parking lots, etc. (Ord. 12-10)

M. When a dead-end street reaches its maximum block length of 1320 feet, it shall not be extended except to connect to another street which provides a second point of independent access. (Ord. 03-10)

8-3-2: **LOCAL MINIMUM STANDARDS & SPECIFICATIONS.** Standards for design, construction specifications, and inspection of street improvements, curbs, gutters, sidewalks, storm drainage and flood control facilities shall be prepared by the City Engineer; standards for water distribution and sewage disposal facilities by the Board of Health; and similar standards for fire protection by Insurance Services Office. All subdividers shall comply with the standards established by such departments and agencies. These standards in addition to the general standards listed below shall be used by all subdividers. (1997)

8-3-3: **OTHER GENERAL STANDARDS.**

A. Irrigation Ditches and Canals. Open ditches or canals shall not be allowed within a subdivision or within an existing street right-of-way adjacent to a subdivision. The subdivider shall work with the irrigation, drainage or ditch companies to determine:

(1) Methods of covering, realigning or eliminating ditches or canals.

(2) The size of pipe and culverts required.

(3) The responsibility for the periodic inspection, cleaning and maintenance of such ditches, pipes and culverts.

In any case where canals or ditches are within public or proposed public rights-of-way, specifications and grades for pipe or culvert must be approved by the City Engineer.

When an irrigation ditch or canal is adjacent to subdivision development the subdivider must construct a continuous chain link fence on the property line of at least five (5) feet in height.

B. Buffering. In addition to fencing ditches and canals the subdivider shall be required to provide adequate buffering as outlined in the City's Zoning Ordinance. (1997)

CHAPTER 4

SUBDIVISION SKETCH (CONCEPT) PLAN;

8-4-1: **Procedures and Requirements for Submission**

8-4-2: **Feasibility Report**

8-4-3: **Action by the Planning Commission**

8-4-1: **PROCEDURES AND REQUIREMENTS FOR SUBMISSION** Submit one (1) standard 22" x 34" copy, plus four (4) reduced to 11" x 17" (1/2 scale) copies of a Sketch Plan to the Planning commission for review and discussion of plan and general scope and conditions. The Plan must be submitted at least two weeks prior to the next regularly scheduled meeting of the Planning Commission and shall include the following items:

A. The proposed name of the subdivision.

B. The adjacent property boundaries under the control of the subdivider together with the boundaries of the proposed Subdivision, showing all streets serving property proposed for subdividing.

C. Approximate number of lots proposed and street layout indicating general scale dimensions of lots. The scale shall not be less than 1" = 100'.

D. Approximate total acreage of the development as well as size of the individual lots.

E. Location of all irrigation, waste water drain channels, and all existing utilities within or adjoining the proposed subdivision.

F. Location of all subsurface or land drains with in the boundaries of the proposed subdivision.

G. Location and approximate acres of open space or parks within the subdivision.

H. Vicinity map.

I. Current Zoning. (1997)

8-4-2: **FEASIBILITY REPORT** The developer shall prepare and submit a development feasibility report that addresses the following:

A. Proposed method of connecting to city utilities including, but not limited to, water, secondary water, storm drain, sanitary sewer land drains, etc.

B. Irrigation water rights to be conveyed to the city to meet the irrigation water requirements.

C. Method and calculations for meeting the density requirements outlined in the city's zoning ordinance for the zone where subdivision is located.

D. Method of meeting the open space requirements outlined in Section 8-2-5

E. Identification of any potential wetland areas within the subdivision and proposed method of dealing with them.

F. Estimated number of phases and the number of lots in each phase of the development.

G. Method of meeting requirements for secondary access required by section 8-2-10. (1997)

8-4-3: **SKETCH PLAN APPROVAL.** The Planning Commission, City Engineer and representatives of other City departments, as deemed necessary by the Zoning Administrator, shall review the Sketch Plan of the proposed subdivision. The Planning Commission shall either approve, deny, or conditionally approve the plans or table action for the next regular meeting, provided, however, that the Planning Commission may serve notice of and hold a public hearing concerning the proposed subdivision before taking any action with respect thereto upon a determination that it is reasonably necessary and would be conducive to a correct and proper decision in the best interests of the City. Such notice shall be given at least seven (7) days before the proposed public hearing and shall be given by publishing it at least once in a newspaper having a general circulation within the City and by posting notice thereof in at least three (3) public places within the City. (Ord. 11-02)

If the Planning Commission denies a Sketch Plan the Planning Commission shall indicate its disapproval by written notice stating the reasons, in which case the applicant may appeal the decision to the City Council. Approval of sketch plans by the Planning Commission will extend for a period of one (1) year. If work or subsequent action by the developer to proceed to preliminary plan review does not occur within the year following initial approval, the developer must re-submit the plans for to re-approval under the latest City ordinances and specifications. (1999) (Ord. 11-02)

CHAPTER 5

PRELIMINARY SUBDIVISION REVIEW

8-5-1: **Preliminary Plat**

8-5-2: **Approval of Preliminary Plat**

8-5-1: **PRELIMINARY PLAT.** The Preliminary Plat shall comply with the following requirements:

(A) Submission Requirement: Submit Three (3) standard 22" x 34" copies (see standard drawing #1) plus Three (3) reduced to 11" x 17" (1/2 scale) , of the preliminary plat to the Planning Commission for review at least two weeks prior to the next regularly scheduled meeting of the Planning Commission. The Planning Commission may, if said copies are not so submitted beforehand, postpone its consideration thereof until its next regularly scheduled meeting.

(B) General Information Required:

(1) The proposed name of the subdivision.

(2) The location of the subdivision, including the address of the section, township and range.

(3) Date of preparation.

(4) The location of the nearest bench mark and monument.

(5) The boundary of the proposed subdivision.

(6) Legal description of the subdivision and acreage included.

(7) Location, width and name of existing streets within two hundred (200) feet of the Subdivision and of all prior platted streets and other public ways, railroad and utilities rights-of-way, parks and other public open spaces, permanent buildings and structures, houses or permanent easements, and section and corporate lines within and adjacent to the tract.

(8) Easements for water, sewer, drainage, utility lines, fencing, and other appropriate purposes.

(9) The layout, number, area, and typical dimensions of lots, streets, and utilities.

(10) Parcels of land intended to be dedicated or temporarily reserved for public use or set aside for use of property owners in a subdivision including, but not limited to, sites to be reserved or dedicated for parks, playgrounds, schools or other public uses.

(11) Current inset City map showing location of subdivision.

(12) Boundary lines of adjacent tracts of undivided land showing ownership.

(13) Location of all wells, proposed, active and abandoned, and of all reservoirs within the tract and to a distance of at least one hundred (100) feet beyond the tract boundaries.

(14) Existing sewers, field drains, water mains, culverts or other underground facilities within the tract and to a distance of at least one hundred (100) feet beyond the tract boundaries, indicating pipe size, grades, manholes and exact location.

(15) Existing ditches, canals, natural drainage channels, open waterways, and proposed alignments within the tract and to a distance of at least one hundred (100) feet beyond the tract boundaries.

(16) Contours at two-foot intervals for predominate ground slopes within the subdivision between level and ten percent, and five-foot contours for predominate ground slopes within the subdivision greater than ten percent.

(17) The plat shall be drawn to a scale of not less than one (1) inch equals one hundred (100) feet and shall indicate the base of bearing true north.

(18) The subdivider's detailed plan for protecting future residents of his development from such hazards as open ditches, canals or waterways, non-access streets, open reservoirs or bodies of water, railroad rights-of-way and other such features of a potentially hazardous nature located on, crossing, contiguous or near to the property being subdivided, with the exception that the subdivider's plan need not cover those features which the Planning Commission determines would not be a hazard to life and/or where the conforming structure designed to protect the future residents would itself create a hazard to the safety of the public. The foregoing does not relieve the subdivider of the duty to investigate all possible means of protecting future residents from a potential hazard before a determination is made that the only conceivable means of protection is potentially more hazardous than the hazard itself.

(19) Location of existing and proposed land drains. (1997)

8-5-2: **APPROVAL OF PRELIMINARY PLAT.** The Planning Commission, City Engineer and representatives of other interested City departments, as deemed necessary by the Zoning Administrator, shall review the preliminary plat and visit the site of the proposed subdivision. Following this investigation, and after receipt of the City Engineer's written comments and recommendations, the Planning Commission shall either approve, reject, conditionally approve or table action for the next regular meeting.

If the preliminary plat is approved, the Planning Commission shall return one copy of the plat signed by the Planning Commission Chairman to the subdivider with any conditions attached. Other signed copies shall be forwarded to each of the interested City departments. The Planning Commission shall retain one signed copy of the plat for its files. If the Preliminary Plat is disapproved, the Planning Commission shall indicate its disapproval by written notice stating the reasons for disapproval.

The receipt of a signed copy of the approved preliminary plat shall authorize the subdivider to proceed with preparation of the final plat. Approval of preliminary plats by the Planning Commission will extend for a period of one year. If work or subsequent action by the developer to proceed to final plan review does not occur within the year following initial approval, the plan must be re-submitted and become subject to re-approval under the latest City ordinances and specifications. (1999)

CHAPTER 6

FINAL SUBDIVISION REVIEW

8-6-1: **Final Plat**

8-6-2: **Final Plan and Profile**

8-6-3: **Final Approval**

8-6-1: **FINAL PLAT.** The Final Plat must be prepared by a licensed land surveyor on a sheet of approved tracing with permanent black Ink and shall be prepared in accordance with the requirements of this ordinance. The plat shall be 19" X 30" and shall have a one and one -half (1 1/2) inch border on the left and a one-half (1/2) inch border on the three remaining sides. The top of the plat shall be either north or east, whichever accommodates the drawing best.

The plat shall show:

(A) The name of the Subdivision, which name must be approved by the Planning Commission and County Recorder.

(B) Accurate angular and linear dimensions for all lines, angles and curves used to describe boundaries, streets, alleys, easements, areas to be reserved for public use and other important features.

(C) An identification system for all lots, blocks and names of streets. Lot lines shall show dimensions in feet and hundredths.

(D) The street address for each lot. Each street address shall be assigned by the City to be consistent with the current numbering scheme.

(E) True angles and distances to the nearest established street lines or official monuments which shall be accurately described in the plat and shown by appropriate symbol.

(F) Radii, internal angles, points and curvatures, tangent bearings and the length of all arcs.

(G) The accurate location of all monuments to be installed shown by the appropriate symbol. All United States, state, county or other official bench marks, monuments or triangulation stations in or adjacent to the property, shall be preserved in precise position.

(H) The dedication to the City of all streets, highways and other public uses and easements included in the proposed subdivision

(I) Street monuments shall be shown on the Final Plat as are approved by the City Engineer. Standard precast monuments will be furnished by the subdivider and placed as approved.

(J) Pipes or other such iron markers shall be shown on the plat.

(K) Accurate outlines and dimensions of any areas to be dedicated or reserved for public use, with the purposes indicated thereon, and of any area to be reserved by deed or covenant for common use of all property owners.

(L) All boundary, lot and other geometrics (bearings, distances, curve data, etc.,) on Final Plat shall pose to an accuracy of not less than one part in five thousand (1/5000).

(M) Location, function, ownership and manner of maintenance of common open space not otherwise reserved or dedicated for public use.

(N) Boundary descriptions of the Subdivision.

(O) Current inset City map showing location of subdivision.

(P) Standard forms for the following:

(1) A registered Land Surveyor's Certificate of Survey as applicable under State Law.

(2) Owner's Dedication which shall "warrant and defend and save the City harmless against any easements or other encumbrances on the dedicated streets which will interfere with the City's use, maintenance and operation of the streets."

(3) A notary public's "Acknowledgement."

(4) The City Planning Commission's "Certificate of Approval."

(5) The City Engineer's "Certificate of Approval."

(6) The City Council's "Certificate of Approval."

(7) The County Recorder's "Certificate of Attest."

(8) A three-inch (3") by three-inch (3") space in the lower right-hand corner of the drawing for recording information.

8-6-2: **FINAL PLAN AND PROFILE.** Plan and Profile must be prepared by a licensed engineer in accordance with the requirements of this ordinance. Standard 22" x 34" and reduced to 11" x 17" (1/2 scale) of the plan and profile will be required for review by the city. (1997)

General Information required.

(A) Plan for culinary water improvements. Show proposed water main sizes, valves, fire hydrants, and service connections to all lots within the proposed subdivision and connections to existing water mains

(B) Plan for secondary water improvements. Show proposed secondary water main sizes, valves, and service connections to all lots within the proposed subdivision and connections to existing secondary water lines.

(C) Plan for sanitary sewer. Show proposed sewer mains and manholes, together with proposed slopes and depths within the proposed subdivision. Also show location of service laterals to each lot within the subdivision.

(D) Land Drain. Show method of dealing with land drains and subsurface water drains within the proposed development. If applicable, indicate location of any service connections and service manholes within the subdivision.

(E) Storm Water. Show location and size of storm water drains, together with any manholes or drop boxes within the subdivision. Show slope and grade of all storm drain lines. Storm water calculations need to accompany drawings for engineer review.

(F) Streets. Typical cross section of road improvements, together with flow line of proposed curb and gutter improvements as compared with existing ground slopes and center line offsets of all proposed utilities.

(G) Stationing. Stationing callouts should conform with acceptable engineering practices.

(H) Agreements. When necessary, copies of any agreements with adjacent property owners relevant to the proposed subdivision shall be presented to the Planning Commission. (1997)

8-6-3: FINAL APPROVAL.

(A) Submittal: Submit one (1) standard 22" x 34" copy of plat and plan & profile sheets, plus one (1) copy of each reduced to 11" x 17" (1/2 scale) to the city. Submit three (3) standard 22" X 34" copies of plat and plan & profile sheet, together with a cost estimate of off-site improvements, storm drain calculations, and a 19"X 30" mylar of the Final Plat to the City engineer.

(B) Engineer Review: City Engineer will review submitted documents and transmit his conclusions and recommendations to the Planning Commission, including cost estimate for off-site improvements required by City ordinance. If documents are in order, City Engineer will sign the mylar indicating his approval of the subdivision. After approval and signature of the Final Plat, the City Engineer shall submit the plat, along with his comments of review and approval to the Planning Commission.

(C) Approval: Upon receipt of the approved plans from the City Engineer the Planning Commission shall either approve, reject, or table action for the next regular meeting the Final Plat. If the final plat is approved, the Planning Commission Chairman shall sign the plat and forward it to the City Council for approval and signature, which action shall be taken in a regularly scheduled meeting of the City Council.

If the Planning Commission does not approve the Final Plat, disapproval shall indicated by written notice stating the reasons for disapproval, in which case the decision can be appealed to the City Council whose decision will be final. Approval of final plats by the City Council will extend for a period of (6) six months. If work or subsequent action by the developer to proceed with offsite construction does not occur within the (6) six month period following initial approval, the plat and construction drawings must be re-submitted and become subject to re-approval under the latest City ordinances and specifications. (1999)

(D) Construction of off-site Improvements: No construction of off-site improvements shall commence until the developer has completed a pre construction meeting with the city planning and building departments, at which time a review of construction project and

expectations of the city will be discussed. Such conference shall be scheduled with the city and all affected utility companies will be invited to attend.

(E) Approval to Record Subdivision: Before any subdivision plat will be recorded, the subdivider shall furnish a corporate surety bond in amount as finally determined by the City Engineer to secure the performance of the public improvements in a workmanlike manner and according to specifications established by the Syracuse City Subdivision Standards {See Section 8-2-3}. Some of the public improvements are as follows:

(1) Paving of streets

(2) Curb, gutter and sidewalks

(3) Sewer and water lines, including irrigation lines

(4) Storm and subsurface drainage

(5) Street signs, monuments, lighting, fences and street trees

(6) Removal or relocation of any easements which may affect the use of the dedicated streets by the City.

(7) Utility development connection fees

(F) Recording. The Final Plat, bearing all official signatures as above required, shall be deposited in the office of the City Recorder, who shall cause the plat to be recorded in the office of the County Recorder. No plat shall be recorded in the office of the County Recorder and lots included in such plat shall not be sold or exchanged, and no offer shall be made to sell or exchange any such lots unless and until the plat is so approved and signed. (1997)

CHAPTER 7

ENFORCEMENT, PERMITS AND PENALTIES

8-7-1: **Enforcement**

8-7-2: **Inspection**

8-7-3: **Permits**

8-7-4: **Violation**

8-7-5: **Penalty**

8-7-1: **ENFORCEMENT** The Planning Commission, the City Council and such other departments and agencies and officials of the City as are specified under the provisions of this title are hereby designated and authorized as the agencies charged with the enforcement of the provisions of this title and shall enter such actions in court as are necessary. Failure of such departments to pursue appropriate legal remedies, shall not legalize any violation of such provisions. (1997)

8-7-2: **INSPECTION.** Appropriate agencies and departments and officials of the City shall inspect or cause to be inspected all buildings, street improvements, fire hydrants and water supply and sewage disposal systems in the course of construction, installation or repair. Excavations for fire hydrants and water and sewer mains and laterals shall not be covered or backfilled until such installation shall have been approved by appropriate department, agency or officials. If any such installation is covered before being inspected and approved, it shall be uncovered after notice to uncover has been issued to the responsible person by the Inspector. (1997)

8-7-3: **PERMITS.** From the time of the effective date of this title, the Building Official shall not grant a permit, nor shall any City office, department or agency grant any license or permit for the use of any land or the construction or alteration of any building or structure on a lot which would be in violation of any provisions of this title until a subdivision plat therefor has been recorded or approved as herein required. Any license or permit issued in conflict with such provisions shall be void. (1997)

8-7-4: **VIOLATION.** No person shall subdivide any tract or parcel of land located wholly or in part in the City except in compliance with the provisions of this title. No person shall purchase, sell or exchange any parcel of land which is any part of a subdivision or a proposed subdivision submitted to the Planning Commission, nor offer for recording in the office of the County Recorder, any deed conveying such parcel of land or any fee interest therein, unless such subdivision has been created pursuant to and in accordance with the provision of this title. (1997)

8-7-5: **PENALTY.** Whoever shall violate any of the provisions of this ordinance shall be guilty of a misdemeanor and, upon conviction of any such violation, shall be punishable by a fine of not more than $1,000.00, or by imprisonment for not to exceed 6 months, or by both fine and imprisonment or by the penalty for transfer and sale of property provided in Section 10-9-26, Utah Code Annotated, 1953, except that in all cases where a corporation would be punishable as for a misdemeanor, and there is no other punishment prescribed by ordinance, such corporation is punishable by a fine not exceeding $1,000.00. Provided

further, that each violation of this ordinance shall be considered a separate offense, and each day such violation is permitted to exist shall constitute a separate offense. (1997)

CHAPTER 8

AMENDMENTS, VALIDITY, REPEALER

8-8-1: **Changes and Amendments**

8-8-2: **Validity**

8-8-3: **Repeal of Inconsistent Ordinances, Rules, and Regulations**

8-8-1: **CHANGES AND AMENDMENTS.** This Subdivision Ordnance may be amended from time to time by the Syracuse City Council after fifteen (15) days notice and public hearing but all proposed amendments shall be first proposed to the Planning Commission for its recommendation, which shall be returned to the Syracuse City Council within thirty (30) days. Failure of the Planning Commission to submit its recommendations within the prescribed time shall be deemed approval by such commission of the proposed change or amendment. The Syracuse City Council may overrule the Planning Commission's recommendation by a majority vote of its members. (1997)

8-8-2: **VALIDITY.** Should any section, clause, or provision of this ordinance be declared by a court of competent jurisdiction to be invalid, the same shall not affect the validity of this ordinance as a whole or any part thereof other than the part specifically so declared to be invalid. (1997)

8-8-3: **REPEAL OF INCONSISTENT ORDINANCES, RULES, AND REGULATIONS.** All ordinances, rules and regulations, or parts thereof, of Syracuse City which are repugnant to or inconsistent or in conflict with this Ordinance are hereby repealed. (1997)

TITLE IX

BUILDING

Chapter 1

Building Department

9-1-1: **Building Inspector Authorized to Enforce Regulations**

9-1-2: **Permit**

9-1-3: **Fees**

9-1-4: **Certificate of Occupancy**

9-1-5: **Off-site Improvement and Completion Bond**

9-1-6: **Off-site Improvement Agreement**

9-1-7: **Enforcement**

9-1-8: **Completion of Additions and Accessory Buildings**

9-1-9: **Penalty**

9-1-1: **BUILDING INSPECTOR AUTHORIZED TO ENFORCE REGULATIONS.** The Building Official of Syracuse City is authorized and responsible to enforce all building regulations which may be adopted by the City Council from time to time. (1997)

9-1-2: **PERMIT.** No person, partnership, firm, or corporation shall commence the erection, construction, or building of any structure, building or edifice nor add to, enlarge, improve, repair, alter, convert, extend, or demolish any building or structure within Syracuse City without first having applied to the City and having been granted a permit to do so by the Building Official or other authorized officer, paying in advance all permit and inspection fees required by and established by these Revised Ordinances or by resolution or ordinance of the City Council from time to time. (1997)

9-1-3: **FEES.** Building permit fees, Plan Review Fees, and Inspection Fees shall be established by the City Council and adopted by resolution from time to time. Any fees incurred for third party project or plan review will be assessed to the project. (1997) (Ord. 12-28)

9-1-4: **CERTIFICATE OF OCCUPANCY.** No person will occupy any structure or portion thereof until a certificate of occupancy has been issued by the Building Official. (1997)

9-1-5: **Rescinded. (Ord. 02-23)**

9-1-6 **OFF-SITE IMPROVEMENT AGREEMENT.** Any person building a residence on any street in the city where off-site improvements have not been previously installed shall be required to sign an off-site improvement lien and agreement, which would require property owner to cover the cost of such improvements when determined by the city that such improvements should be installed. Lien agreement shall be recorded with the Davis County Recorder's office prior to the issuance of a building permit. (1997)

9-1-7: **ENFORCEMENT.** The Building Official of Syracuse City or other designated officers shall be authorized and responsible to enforce all building regulation's as adopted by the City Council. (1997)

9-1-8: **COMPLETION OF ADDITIONS AND ACCESSORY BUILDINGS:** Any building permit issued for an addition, modification, or alteration to any existing building or any accessory building shall have the exterior of said structure fully completed within nine (9) months of the issuance of a building permit.

9-1-9 **PENALTY.** It shall be a Class B Misdemeanor to erect or construct any building or structure in the City in violation of, or without complying with the regulations provided in this Title. In Addition, the erection or construction of a building or structure in violation of or without complying with the regulations of this Title may be enjoined by the City by appropriate Court proceedings. (1997)

Chapter 2

Construction Standards

9-2-1: **Adopted Standards**

9-2-2: **Electrical Disturbances**

9-2-3: **Under Slab Rock**

9-2-4: **Finished Foundations**

9-2-5: **Culinary Water Service**

9-2-6: **Toilet Facilities for Workers**

9-2-1: **Adopted Standards.** All persons building within the corporate limits of Syracuse City shall adhere to the construction standards as adopted in the Title VIII, Subdivision Ordinance; Title X, Zoning Ordinance; Chapter 3 of this Title; and standards outlined in this chapter. (1997)

9-2-2: **Electrical Disturbances.** Electrical installations, equipment, or other facilities which create electrical disturbances that cause interference with normal radio or television reception beyond the immediate vicinity of such electrical installations are hereby declared to be a nuisance. The owners or operators thereof shall so install and maintain such installations as to avoid or eliminate such interference. The Building Official shall be authorized to withdrawal approval of any such electrical installations causing disturbances as stated above. (1997)

9-2-3: **Under Slab Rock.** In all occupancies a minimum of 4 inches of 1 inch or smaller rock will be required under all basement floors unless otherwise permitted by the Building Official or other designated officers. (1997)

9-2-4: **Finished Foundations.** All group R occupancies as defined by the Uniform Building Code, having 6" or more of exposed foundation above finished grade, shall be finished plaster or have a finished surface no less than that obtained by the use of plaster. Example's of such finishes include, but are not limited to, decorative finishes using molded forms, aggregate, troweled concrete, etc. (1997)

9-2-5: ***Culinary Water Service.*** *All culinary water services shall be made using type "K" copper from the water meter to the main water disconnect inside the home. (1997) (repealed by Ord. 06-12)*

9-2-6: **Toilet Facilities for Workers.** Toilet facilities shall be provided as outlined in the International Plumbing Code for construction workers, and such facilities shall be maintained in a sanitary condition. Construction worker toilet facilities of the nonsewer type shall conform to ANSI Z4.3, which requirements are summarized in the table below:

Minimum number of Toilet Facilities	
Number of Employees 1 – 10 11 – 20 More than 20	(if serviced once per week) 1 2 1 additional facility for each 10 additional employees
1 – 15 16 – 35 More than 35	(If serviced more than once per week) 1 2 1 additional facility for each 20 additional employees
"Servicing" refers to the emptying of waste and the cleaning of the toilet facility. A camp equipped with flush toilets shall meet the standard for "minimum number of toilet facilities if serviced more than once per week."	

(Ord. 04-09)

Chapter 3

Construction Codes

9-3-1: **Adoption of Building Code**

9-3-2: **Adoption of Plumbing Code**

9-3-3: **Adoption of Electrical Code**

9-3-4: **Adoption of Mechanical Code**

9-3-5: **Adoption of the Valuation Schedule**

9-3-6: **Adoption of the Uniform Code for the Abatement of Dangerous Buildings**

9-3-1 **ADOPTION OF BUILDING CODE:** The building code, as published by the International Conference of Building Officials and currently adopted by the State of Utah is hereby adopted by reference and made part of these revised ordinances. Any successive amendments, editions, and/or appendixes adopted by the State of Utah are hereby incorporated herein by reference and shall be effective upon the date effective as Utah State Statutes. Not less than three copies of said code shall be deposited in the office of the City and open for public inspection and use. (Ord. 02-16)

9-3-2 **ADOPTION OF UNIFORM PLUMBING CODE:** The Uniform Plumbing Code, as published by the International Association of Plumbing and Mechanical officials is hereby adopted by reference and made part of these revised ordinances. Any successive amendments, editions, and/or appendixes adopted by the State of Utah is hereby incorporated herein by reference and shall be effective upon the date it is effective as a Utah State Statute. Not less than three copies of said code shall be deposited in the office of the city and open for public inspection and use. (2000)

9-3-3 **ADOPTION OF ELECTRICAL CODE:** The National Electrical Code, as published by the National Fire Protection Association is hereby adopted by reference and made part of these revised ordinances. Any successive amendments, editions, and/or appendixes adopted by the State of Utah is hereby incorporated herein by reference and shall be effective upon the date it is effective as a Utah State Statute. Not less than three copies of said code shall be deposited in the office of the city and open for public inspection and use. (2000)

9-3-4 **ADOPTION OF MECHANICAL CODE:** The Uniform Mechanical Code, as published by the International Conference of Building Officials is hereby adopted by reference and made part of these revised ordinances. Any successive amendments, editions, and/or appendixes adopted by the State of Utah is hereby incorporated herein by reference and shall be effective upon the date it is effective as a Utah State Statute. Not less than three copies of said code shall be deposited in the office of the city and open for public inspection and use. (2000)

9-3-5 **ADOPTION OF THE VALUATION SCHEDULE:** The City hereby adopts by reference the valuation schedule from the Building Standards Magazine published by the International Conference of Building Officials to be used in determining the valuation of new construction. Updated editions shall be incorporated herein by reference and shall be effective upon the date of publishing. Syracuse City will use the regional modifier for Utah using average cost per square foot as may apply. (2000)

9-3-6 **ADOPTION OF THE UNIFORM CODE FOR THE ABATEMENT OF DANGEROUS BUILDINGS:** The Uniform Code for the Abatement of Dangerous Buildings, published by the International Conference of Building Officials, is hereby adopted by reference and made part of these ordinances. Any successive amendments, editions and/or appendixes published by the International Conference of Building Officials, is hereby incorporated herein by reference and shall be effective upon the date of publication by the International Conference of Building Officials. (2000)

TITLE 9

CHAPTER 4

FLOOD DAMAGE PREVENTION

9-4-1: **Findings of Fact**

9-4-2: **Purpose**

9-4-3: **Methods for Reducing Flood Losses**

9-4-4: **Definitions**

9-4-5: **General Provisions**

9-4-6: **Designation of the Public Works Director**

9-4-7: **Duties and Responsibilities of the Public Works Director**

9-4-8: **Permit Procedures**

9-4-9: **Appeal Procedure**

9-4-10: **Variance Procedure**

9-4-11: **General Standards**

9-4-12: **Specific Standards**

9-4-13: **Floodways**

9-4-14: **Penalty**

9-4-1 **FINDINGS OF FACT**

(a) The flood hazard areas of Syracuse City are subject to periodic inundation which results in loss of life and property, health and safety hazards, disruption of commerce and governmental services, and extraordinary public expenditures for flood protection and relief, all of which adversely affect the public health, safety and general welfare. (Ord. 07-17)

(b) These flood losses are created by the cumulative effect of obstructions in floodplains which cause an increase in flood heights and velocities, and by the occupancy of flood hazard areas by uses vulnerable to floods and hazardous to other lands because they are inadequately elevated, flood-proofed or otherwise protected from flood damage. (Ord. 07-17)

9-4-2 **PURPOSE:** It is the purpose of this ordinance to promote the public health, safety, and general welfare of the residents of Syracuse, Utah, and to minimize public and private losses due to flood conditions in specific areas by provisions designed: (Ord. 07-17)

(a) To protect human life and health;

(b) To minimize expenditure of public money for costly flood control projects;

(c) To minimize the need for rescue and relief efforts associated with flooding and generally undertaken at the expense of the general public;

(d) To minimize prolonged business interruptions;

(e) To minimize damage to the public facilities and utilities such as water and gas mains, electric, telephone and sewer lines, and streets and bridges located in special flood hazard areas;

(f) To help maintain a stable tax base by providing for the second use and development of special flood hazard areas so as to minimize future flood blight areas;

(g) To ensure that potential buyers are notified that property is in a special flood hazard area; and

(h) To ensure that those who occupy a special flood hazard area assume responsibility for their actions.

9-4-3 **METHODS FOR REDUCING FLOOD LOSSES:** In order to accomplish its purposes, this ordinance includes methods and provisions for: (Ord. 07-17)

(a) Restricting or prohibiting uses which are dangerous to health, safety, and property due to water or erosion hazards, or which result in excessive increases in erosion or flood heights or velocities;

(b) Requiring that uses vulnerable to floods, including facilities which serve such uses, be protected against flood damage at the time of initial construction;

(c) Controlling the alteration of natural floodplains, stream channels, and natural protective barriers, which are involved in the accommodation of channel flood waters;

(d) Controlling filling, grading, dredging, and other development which may increase flood damage; and

(e) Preventing or regulating the construction of flood barriers which will unnaturally divert flood waters or which may increase flood hazards to other lands.

9-4-4 **DEFINITIONS:** Unless specifically defined below, words or phrases used in this ordinance shall be interpreted so as to give them the meaning they have in

common usage and to give this ordinance its most reasonable application. (Ord. 07-17)

(a) "Alluvial Fan Flooding." Flooding occurring on the surface of an alluvial fan or similar landform which originates at the apex and is characterized by high-velocity flows; active processes of erosion, sediment transport, and deposition; and unpredictable flow paths.

(b) "Apex." A point on an alluvial fan or similar land form below which the flow path of the major stream that formed the fan becomes unpredictable and alluvial fan flooding can occur.

(c) “Appurtenant structure.” A structure which is located on the same parcel of property as the principle structure and the use of which is incidental to the use of the principle structure. Appurtenant structures should constitute a minimal investment, may not be used for human habitation, and be designed to have minimal flood damage potential. Examples of appurtenant structures are detached garages, carports, storage sheds, pole barns and hay sheds.

(d) "Area of Shallow Flooding." A designated AH, AO, or VO zone with a one percent or greater annual chance of flooding to an average depth of one to three feet where a clearly defined channel does not exist, where the path of flooding is unpredictable and where velocity flow may be evident. Such flooding is characterized by ponding or sheet flow.

(e) "Base Flood." The flood having a one percent chance of being equaled or exceeded in any given year.

(f) “Base Flood Elevation.” The computed elevation to which floodwater is anticipated to rise during the base flood. Base Flood Elevations (BFEs) are shown on Flood Insurance Rate Maps (FIRMs) and on the flood profiles.

(g) “Basement.” Any area of the building having its floor sub-grade (below ground level) on all sides.

(h) “Breakaway wall.” A wall that is not part of the structural support of the building and is intended through its design and construction to collapse under specific lateral loading forces without causing damage to the elevated portion of the building or the supporting foundation system.

(i) “Critical Feature.” An integral and readily identifiable part of a flood protection system, without which the flood protection provided by the entire system would be compromised.

(j) "Development." Any man-made change to improved or unimproved real estate, including but not limited to buildings or other structures, mining, dredging, filling, grading, paving, excavation or drilling operations or storage of equipment or materials located within the special flood hazard area.

(k) “Elevated Building.”

1) A non-basement building which is:

i. Built, in the case of a building in Zones A1-30, AE, A, A99, AO, AH, B, C, X, and D, to have the top of the elevated floor, or in the case of a building in Zones V1-30, VE, or V, to have the bottom of the lowest horizontal structure member of the elevated floor elevated above the ground level by means of pilings, columns (posts and piers), or shear walls parallel to the floor of the water; and

ii. Adequately anchored so as not to impair the structural integrity of the building during a flood of up to the magnitude of the base flood

2) In the case of Zones A1-30, AE, A, A99, AO, AH, B, C, X, and D, "elevated building" also includes a building elevated by means of fill or solid foundation perimeter walls with openings sufficient to facilitate the unimpeded movement of flood waters.

(l) “Existing Construction.” For the purposes of determining rates, structures for which the “start of construction” commenced before the effective date of the FIRM or before January 1, 1975, for FIRMs effective before that date. “Existing construction” may also be referred to as “existing structures.”

(m) "Existing Manufactured Home Park or Subdivision." A manufactured home park or subdivision for which the construction of facilities for servicing the lots on which the manufactured homes are to be affixed (including, at a minimum, the installation of utilities, the construction of streets, and either final site grading or the pouring of concrete pads) is completed before the effective date of this ordinance.

(n) "Expansion to Existing Manufactured Home Park or Subdivision." The preparation of additional sites by the construction of facilities for servicing the lots on which the manufactured homes are to be affixed (including the installation of utilities, the construction of streets, and either final site grading or the pouring of concrete pads).

(o) "Flood or Flooding." A general and temporary condition of partial or complete inundation of normally dry land areas from:

1) The overflow of inland or tidal waters;

2) The unusual and rapid accumulation or runoff of surface waters from any source; or

3) Mudslides (i.e., mudflows) which are proximately caused by flooding as defined in paragraph (2) of this definition and are akin to a river of liquid and flowing mud on the surfaces of normally dry land areas, as when earth is carried by a current of water and deposited along the path of the current.

(p) “Flood elevation study.” An examination, evaluation and determination of flood hazards and, if appropriate, corresponding water surface elevations, or an examination, evaluation and determination of mudslide (i.e., mudflow) and/or flood-related erosion hazards.

(q) "Flood Insurance Rate Map (FIRM)." The official map on which the Federal Emergency Management Agency has delineated both special flood hazard areas and the risk premium zones applicable to the City.

(r) "Flood Insurance Study." The official report provided by the Federal Emergency Management Agency that includes flood profiles, the Flood Boundary-Floodway Map, and the water surface elevation of the base flood.

(s) “Flood Protection System.” Those physical structural works for which funds have been authorized, appropriated, and expended and which have been constructed specifically to modify flooding in order to reduce the extent of the area within a community subject to a “special flood hazard” and the extent of the depths of associated flooding. Such a system typically includes hurricane tidal barriers, dams, reservoirs, levees or dikes. These specialized flood modifying works are those constructed in conformance with sound engineering standards.

(t) “Floodplain” or “Flood Prone Area.” Any land area susceptible to being inundated by water from any source (see definition of “flooding”).

(u) “Floodplain Management.” The operation of an overall program of corrective and preventive measures for reducing flood damage, including but not limited to emergency preparedness plans, flood control works and floodplain management regulations.

(v) “Floodplain Management Regulations.” Any state law or city ordinance, including Syracuse City zoning ordinances, subdivision regulations, building codes, health regulations, special purpose ordinances such as this Floodplain Ordinance, etc., which provide standards for the purpose of flood damage prevention and reduction.

(w) "Floodproofing." Any combination of structural and non-structural additions, changes, or adjustments to structures which reduce or eliminate flood damage to real estate or improved real property, water and sanitary facilities, structures and their contents.

(x) "Floodway." The channel of a river or other watercourse and the adjacent land areas that must be reserved in order to discharge the base flood without cumulatively increasing the water surface elevation more than one foot.

(y) “Functionally Dependent Use.” A use which cannot perform its intended purpose unless it is located or carried out in close proximity to water. The term includes only docking facilities, port facilities that are necessary for the loading and unloading of cargo or passengers, and ship building and ship repair facilities, but does not include long-term storage or related manufacturing facilities.

(z) “Highest Adjacent Grade.” The highest natural elevation of the ground surface prior to construction next to the proposed walls of a structure.

(aa) “Historic Structure.” Any structure that is:

1) Listed individually in the National Register of Historic Places (a listing maintained by the Department of Interior) or preliminarily

determined by the Secretary of the Interior as meeting the requirements for individual listing on the National Register;

2) Certified or preliminarily determined by the Secretary of the Interior as contributing to the historical significance of a registered historic district or a district preliminarily determined by the Secretary to qualify as a registered historic district;

3) Individually listed on the State register as promulgated by the Utah Division of State History; or

4) Individually listed on a local inventory or historic places in communities with historic preservation programs that have been certified either: (1) by an approved state program as determined by the Secretary of the Interior; or (2) directly by the Secretary of the Interior in states without approved programs.

(bb) “Hydrodynamic Loads.” Forces imposed on structures by flood waters due to the impact of moving water on the upstream side of the structure, drag along its sides, and eddies or negative pressures on its downstream side.

(cc) “Hydrostatic Loads.” Loads or pressures resulting from the static mass of water at any point of floodwater contact with a structure. They are equal in all directions and always act perpendicular to the surface on which they are applied.

(dd) “Levee.” A man-made structure, usually an earthen embankment, designed and constructed in accordance with sound engineering practices to contain, control, or divert the flow of water so as to provide protection from temporary flooding.

(ee) “Levee System.” A flood protection system which consists of a levee, or levees, and associated structures, such as closure and drainage devices, which are constructed and operated in accordance with sound engineering practices.

(ff) "Lowest Floor." The lowest floor of the lowest enclosed area (including basement). An unfinished or flood resistant enclosure, usable solely for parking of vehicles, building access or storage, in an area other than a basement area, is not considered a building's lowest floor, provided that such enclosure is not built so as to render the structure in violation of the applicable nonelevation design requirements of Section 60.3 of the National Flood Insurance Program Regulations.

(gg) "Manufactured Home." A structure, transportable in one or more sections, which is built on a permanent chassis and is designed for use with or without a permanent foundation when attached to the required utilities. The term "manufactured home" does not include a "recreational vehicle.”

(hh) “Manufactured Home Park or Subdivision.” A parcel (or contiguous parcels) of land divided into two or more manufactured home lots for rent or sale.

(ii) “Mean Sea Level.” For purposes of the National Flood Insurance Program, the North American Vertical Datum (NAVD) of 1988 or other

datum, to which base flood elevations shown on a community's Flood Insurance Rate Map are referenced.

(jj) "New Construction." For purposes of determining insurance rates, structures for which the "start of construction" commenced on or after the effective date of the City's initial FIRM, or after December 31, 1974, whichever is later, and includes any subsequent improvements to such structures. For floodplain management purposes, "new construction" means structures for which the "start of construction" commenced on or after the effective date of this ordinance, and includes any subsequent improvements to such structures.

(kk) "New Manufactured Home Park or Subdivision." A manufactured home park or subdivision for which the construction of facilities for servicing the lots on which the manufactured homes are to be affixed (including at a minimum, the installation of utilities, the construction of streets, and either final site grading or the pouring of concrete pads) is completed on or after the effective date of this ordinance.

(ll) "Recreational Vehicle." A vehicle which is: (a) built on a single chassis; (b) 400 square feet or less when measured at the largest horizontal projections; (c) designed to be a self-propelled or permanently towable by a light duty truck; and (d) designed primarily not for use as a permanent dwelling but as temporary living quarters for recreational, camping, travel, or seasonal use.

(mm) "Regulatory Floodway." The channel of a river or other watercourse and the adjacent land areas that must be reserved in order to discharge the base flood without cumulatively increasing the water surface elevation more than one foot.

(nn) "Special Flood Hazard Area." The land in the floodplain subject to a one percent or greater chance of flooding in any given year.

(oo) "Start of Construction." Includes substantial improvement, and means the date the building permit was issued, provided the actual start of construction, repair, reconstruction, placement or other improvement was within 180 days of the permit date. The actual start means the first placement of permanent construction of a structure on a site, such as the pouring of slab or footings, the installation of piles, the construction of columns, or any work beyond the stage of excavation or the placement of a manufactured home on a foundation. Permanent construction does not include land preparation, such as clearing, grading or filling; nor does it include the installation of streets and/or walkways; nor does it include excavation for a basement, footings, piers, or foundations or the erection of temporary forms; nor does it include the installation on the property of accessory buildings, such as garages or sheds not occupied as dwelling units or not part of the main structure. For a substantial improvement, the actual start of construction means the first alteration of any wall, ceiling, floor, or other structural part of a building, whether or not that alteration affects the external dimensions of the building.

(pp) "Structure." A walled and roofed building, including gas or liquid storage tank, that is principally above ground, as well as a manufactured home.

(qq) "Substantial Damage." Damage of any origin sustained by a structure whereby the cost of restoring the structure to its before damaged condition would equal or exceed fifty percent (50%) of the market value of the structure before the damage occurred.

(rr) "Substantial Improvement." Any reconstruction, rehabilitation, addition, or other improvement of a structure, the cost of which equals or exceeds fifty percent (50%) of the market value of the structure before the "start of construction" of the improvement. This term includes structures which have incurred "substantial damage," regardless of the actual repair work performed. The term does not, however, include either:

1) Any project for improvement of a structure to correct existing violations of State or local health, sanitary, or safety code specifications which have been identified by the local code enforcement official and which are the minimum necessary to assure safe living conditions; or

2) Any alteration of a "historic structure," provided that the alteration will not preclude the structure's continued designation as a "historic structure."

(ss) "Variance." A grant of relief from the requirements of this ordinance which permits construction in a manner that would otherwise be prohibited by this ordinance in accordance with Section 60.6 of the National Flood Insurance Program Regulations.

(tt) "Violation." Failure to comply with any of the terms and conditions of this ordinance.

(uu) "Water Surface Elevation." The height, in relation to the North American Vertical Datum (NAVD) of 1988 (or other datum, where specified), of floods of various magnitudes and frequencies in the floodplains of coastal or riverine areas.

9-4-5 GENERAL PROVISIONS: (Ord. 07-17)

(a) Lands to which this Ordinance Applies. This ordinance shall apply to all special flood hazard areas within the jurisdiction of Syracuse City.

(b) Basis for Establishing the Special Flood Hazard Areas. The special flood hazard areas identified by the Federal Emergency Management Agency in a scientific and engineering report entitled "The Flood Insurance Study for the City of Syracuse," dated June 18, 2007, with an accompanying Flood Insurance Rate Map (FIRM), is hereby adopted by reference and declared to be a part of this ordinance. The Flood Insurance Study and FIRM are available for inspection at the City offices located at 1787 South 2000 West, Syracuse, Utah, 84075.

(c) Compliance. No structure or land shall hereafter be constructed, located, extended, converted, or altered unless the modification fully complies with the terms of this ordinance and other applicable regulations.

(d) Abrogation and Greater Restrictions. This ordinance is not intended to repeal, abrogate, or impair any existing easements, covenants, or deed restrictions. However, where this ordinance and another ordinance,

easement, covenant, or deed restriction conflict or overlap, whichever imposes the more stringent restrictions shall prevail.

(e) Interpretation. In the interpretation and application of this ordinance, all provisions shall be:

1) Considered as minimum requirements;

2) Liberally construed in favor of the governing body; and

3) Deemed neither to limit nor repeal any other powers granted under State statutes.

(f) Warning and Disclaimer of Liability. The degree of flood protection required by this ordinance is considered reasonable for regulatory purposes and is based on scientific and engineering considerations. Larger floods can and will occur on rare occasions. Flood heights may be increased by man-made or natural causes. This ordinance does not imply that land outside the special flood hazard areas or uses permitted within such areas will be free from flooding or flood damages. This ordinance shall not create liability on the part of Syracuse City or any officer or employee thereof, or the Federal Emergency Management Agency for any flood damages that result in reliance on this ordinance or any administrative decision lawfully made thereunder.

9-4-6 **DESIGNATION OF THE PUBLIC WORKS DIRECTOR:** The Public Works Director or his or her designee (hereinafter referred to as the "Public Works Director") is hereby appointed to administer and implement the provisions of this ordinance and relevant provisions of 44 C.F.R. (National Flood Insurance Program Regulations) pertaining to floodplain management, and performing all other duties as provided herein. (Ord. 07-17)

9-4-7 **DUTIES AND RESPONSIBILITIES OF THE PUBLIC WORKS DIRECTOR:** Duties of the Public Works Director shall include, but are not limited to, the following: (Ord. 07-17)

(a) Permit Review.

1) Review and approve or deny all applications for Floodplain Development Permits required by this ordinance.

2) Review all development permits to determine that the permit requirements of this ordinance have been satisfied.

3) Review all development permits to determine that all necessary permits have been obtained from those Federal, State, or local governmental agencies from which prior approval is required (including Section 404 of the Federal Water Pollution Control Act Amendments of 1972, 33 U.S.C. 1334).

4) Review all development permits to determine whether proposed building sites, including the placement of manufactured homes, will be reasonably safe from flooding.

5) Review all development permits to determine if the proposed development is located in the floodway. Except as provided in Section 9-4-130, no development shall be permitted within a floodway.

(b) Use of Other Base Flood Data. When base flood elevation data has not been provided in accordance with Section 9-4-050(b), "Basis for Establishing the Special Flood Hazard Areas", the Public Works Director shall obtain, review, and reasonably utilize any base flood elevation data available from a Federal, State, or other source as criteria for requiring that new construction, substantial improvements, or other development is administered in accordance with Section 9-4-120 "Specific Standards."

(c) Information to Be Obtained and Maintained.

1) Obtain and record the actual elevation (in relation to mean sea level) of the lowest floor (including basement) of all new or substantially improved structures, and whether or not the structure contains a basement; provided that in any V1-30, VE, and V Zones, the actual elevation to be obtained and recorded is that of the bottom of the lowest structural member of the floor (excluding piling and columns) of all new or substantially improved structures, and whether or not the structure contains a basement.

2) For all new or substantially improved floodproofed structures.

i. Verify and record the actual elevation (in relation to mean sea level) to which the structure has been floodproofed.

ii. Maintain the floodproofing certifications required in Section 9-4-080.

3) Maintain for public inspection all records pertaining to the provisions of this ordinance.

(d) Alteration of Watercourses.

1) Notify adjacent communities, the Utah State Division of Water Rights, and the Utah State Division of Water Resources prior to any alteration or relocation of a watercourse, and submit copies of such notification to the Federal Emergency Management Agency.

2) Assure that the flood carrying capacity within the altered or relocated portion of any watercourse is maintained.

(e) Interpretation of FIRM Boundaries. Make interpretations where needed, as to the exact location of the boundaries of the special flood hazard areas (for example, where there appears to be a conflict between a mapped boundary and actual field conditions). The person contesting the location of the boundary shall be given a reasonable opportunity to appeal the interpretation as provided in Section 9-4-090.

(f) Construction when No Regulatory Floodway has been Designated. When a regulatory floodway has not been designated, the Public Works Director must require that no new construction, substantial

improvements, or other development (including fill) shall be permitted within Zones A1-30 and AE on the community's FIRM, unless it is demonstrated that the cumulative effect of the proposed development, when combined with all other existing and anticipated development, will not increase the water surface elevation of the base flood more than one foot at any point within the community.

(g) Application for Conditional FIRM Revision. The Public Works Director shall review applications for Conditional Firm Revisions in accordance with Section 9-4-130, "Floodways."

9-4-8 **PERMIT PROCEDURES:** A Floodplain Development Permit ("Permit"), shall be obtained before construction or development begins within any special flood hazard area established in Section 9-4-050(b). Application for a Permit shall be made on forms furnished by the City and may include, but not be limited to, plans in duplicate drawn to scale showing the nature, location, dimensions, and elevations of the area in question; existing or proposed structures, fill, storage of materials, drainage facilities; and the location of the foregoing. The Public Works Director may require certification of any of these requirements by a professional engineer, architect, or surveyor as he or she deems necessary. (Ord. 07-17)

(a) Specific Requirements. The applicant must provide the following information:

1) The elevation in relation to the mean sea level, of the lowest floor (including the basement) of all new and substantially improved structures;

2) The elevation in relation to the mean sea level to which any nonresidential structure shall be floodproofed;

3) Certification by a registered professional engineer or architect that the nonresidential flood proofed structure shall meet the floodproofing criteria of this ordinance; and

4) A description of the extent to which any watercourse or natural drainage will be altered or relocated as a result of the proposed development.

(b) Approval or Denial. Approval or denial of a Permit by the Public Works Director shall be based on the provisions and intent of this ordinance and the following relevant factors:

1) The danger to life and property due to flooding or erosion damage;

2) The susceptibility of the proposed facility and its contents to flood damage and the effect of such damage on the individual owner;

3) The danger that materials may be swept onto other lands to the injury of others;

4) The compatibility of the proposed use with existing and anticipated development;

5) The safety of access to the property in times of flood for ordinary and emergency vehicles;

6) The costs of providing governmental services during and after flood conditions including maintenance and repair of streets and bridges, and public utilities and facilities such as sewer, gas, electrical and water systems;

7) The expected heights, velocity, duration, rate of rise and sediment transport of the flood waters and the effects of wave action, if applicable, expected at the site;

8) The necessity to the facility of a waterfront location, where applicable;

9) The availability of alternative locations, not subject to flooding or erosion damage, for the proposed use;

10) The relationship of the proposed use to the comprehensive plan and floodplain management plan for that area; and

11) The importance of the services provided by the proposed facility to the community.

9-4-9 APPEAL PROCEDURE: (Ord. 07-17)

(a) Any person adversely affected by a final decision of the Public Works Director made in the administration or interpretation of this ordinance may, within the time provided herein, appeal that decision to the City Council by alleging that there is error in any such final order requirement, decision, or determination made by the Public Works Director in the administration or interpretation of this ordinance. Appeals filed hereunder shall be in writing and shall be filed with the City Recorder within thirty (30) days of the decision which is appealed. The appeal shall include any required City appeal forms and shall set forth, at a minimum: the name, address and telephone number of the appellant; the decision being appealed; the grounds for appeal; and a description of the alleged error in the decision or determination of the Public Works Director. Only decisions of the Public Works Director applying this Chapter may be appealed to the City Council as provided herein. Appeals may not be used to waive or modify the terms or requirements of this Chapter.

(b) After the appeal application is deemed complete, the City Recorder shall schedule the matter to be heard by the City Council. Prior to the appeal hearing, the City Recorder shall transmit all papers constituting the record of the decision or action being appealed to the City Council and the appellant. The City Council shall review the record of the decision or action of the Public Works Director and provide the appellant an opportunity to be heard regarding the appeal. In reviewing the appeal, the City Council shall consider and review all relevant technical evaluations and the specific factors set forth in Section 9-4-080(b). The City Council shall decide the matter in accordance with the standard of review set forth in Subsection (c).

(c) The City Council may affirm or reverse the decision of the Public Works Director, in whole or in part, or may remand the administrative decision to

the Public Works Director. The City Council is also authorized to impose additional conditions as part of its determination of the appeal as necessary to conform with the purposes and intent of this ordinance. The City Council shall review the administrative decision of the Public Works Director for correctness in determining whether there is substantial evidence in the record to support the order, decision, or determination. The appellant shall have the burden of proving that an error has been made. The City Council shall issue a written decision.

(d) A record of all appeals shall be maintained by the City in accordance with the Utah Government Records Access and Management Act, *Utah Code Ann.* §§ 63-2-101, *et seq*., as amended.

9-4-10 VARIANCE PROCEDURE: (Ord. 07-17)

(a) The Syracuse City Council is hereby designated to hear and decide requests for variances from the requirements of this ordinance.

(b) The applicant shall have the right to a hearing before the Syracuse City Council on the question of whether or not the request for the variance fulfills the variance requirements of this ordinance. The City Council shall render a decision denying the variance, granting the variance, or granting the variance with conditions.

(c) Those aggrieved by the decision of the Syracuse City Council may appeal such decision to the court of competent jurisdiction.

(d) The City shall maintain a record of all variance actions, including justification for their issuance, and report such variances issued in its annual or biennial report submitted to the Public Works Director. The Public Works Director shall report any variances to the Federal Emergency Management Agency upon request.

(e) In passing upon applications for a variance, the City Council shall consider all technical evaluations, those specific factors established in Section 9-4-080(b), the intent and purpose of this ordinance, and the following conditions:

1) Due to the dangers caused by flooding to human life and property and the costs and hardship caused thereby, only under limited circumstances may variances be granted in Syracuse City. Variances shall only be issued upon:

i. A showing of good and sufficient cause;

ii. A determination that failure to grant the variance would result in exceptional hardship to the applicant; and

iii. A determination that the granting of a variance will not result in increased flood heights, additional threats to human life and public safety, extraordinary public expense, create nuisances, cause fraud on or victimization of the public, or conflict with existing local laws or ordinances.

2) Variances may be issued for the repair or rehabilitation of historic structures upon a determination that the proposed repair or rehabilitation will not preclude the structure's continued designation

as a historic structure and the variance is the minimum necessary to preserve the historic character and design of the structure. Variances may be issued for the reconstruction, rehabilitation or restoration of structures listed on the National Register of Historic Places or the State Inventory of Historic Places, without regard to the procedures set forth in the remainder of this ordinance.

3) Variances shall not be issued within any designated floodway if any increase in flood levels during the base flood discharge would result.

4) Variances shall only be issued when a determination has been made that the variance is the minimum necessary, considering the flood hazard, to afford relief.

5) Variances issued for new construction and substantial improvements and for other development necessary for the conduct of a functionally dependent use may only be granted provided the structure or other development is protected by methods that minimize flood damage during the base flood and create no additional threats to public safety.

6) Any applicant to whom a variance is granted shall be given written notice that the issuance of a variance to construct a structure below the base flood level will result in increased risk to life and property and an increase in premium rates for flood insurance, which may be substantial and will be commensurate with the risk of construction below the base flood level. Insurance rates may amount up to as high as $25 for $100 of insurance coverage. This notice shall be maintained with a record of all variance actions as required in Section 9-4-10(d).

7) All variances shall include a condition that the applicant sign an assumption of risk and waiver of liability agreement, in a form acceptable to the City, absolving Syracuse City of any and all liability in the event flood damage occurs to that portion of a structure for which the variance is granted. This agreement shall be recorded in the office of the Davis County Recorder, shall run with the land, and shall be binding upon all future owners thereof.

(f) The Syracuse City Council may attach such conditions to the granting of variances as it deems necessary and which fulfill the criteria of the variance provisions of this ordinance.

9-4-11 **GENERAL STANDARDS:** In all special flood hazard areas the following standards are required: (Ord. 07-17)

(a) Construction Materials and Methods.

1) All new construction and substantial improvements shall be constructed with materials and utility equipment resistant to flood damage.

2) All new construction and substantial improvements shall be constructed using methods and practices that minimize flood damage.

3) All new construction and substantial improvements shall be constructed with electrical, heating, ventilation, plumbing, and air conditioning equipment and other service facilities that are designed and/or located so as to prevent water from entering or accumulating within the components during conditions of flooding.

(b) Anchoring. All new construction and substantial improvements shall be designed (or modified) and adequately anchored to prevent flotation, collapse, or lateral movement of the structure and capable of resisting the hydrostatic and hydrodynamic loads, including the effects of buoyancy.

(c) Utilities.

1) All new and replacement water supply systems shall be designed to minimize or eliminate infiltration of flood waters into the system.

2) New and replacement sanitary sewage systems shall be designed to minimize or eliminate infiltration of flood waters into the systems and discharge from the systems into flood waters.

3) On-site waste disposal systems shall be located to avoid impairment to them or contamination from them during flooding.

(d) Subdivision Proposals.

1) All subdivision proposals (including proposals for manufactured home parks and subdivisions) shall be consistent with the need to minimize flood damage in accordance with the purposes and intent of this ordinance.

2) All subdivision proposals (including proposals for manufactured home parks and subdivisions) shall meet the permit requirements of Section 9-4-080 and all applicable provisions of Sections 9-4-110 and 9-4-120.

3) All subdivision proposals (including proposals for manufactured home parks and subdivisions) shall have public utilities and facilities such as sewer, gas, electrical, and water systems located and constructed to minimize or eliminate flood damage.

4) All subdivision proposals (including proposals for manufactured home parks and subdivisions) shall have adequate drainage provided to reduce exposure to flood hazards.

5) Base flood elevation data shall be provided for subdivision proposals and other proposed development (including proposals for manufactured home parks and subdivisions) which contain at least fifty (50) lots or five (5) acres (whichever is less), if not otherwise provided by 9-4-030(b), “Basis for Establishing the Special Flood Hazard Areas” or 9-4-050(b), “Use of Other Base Flood Data.”

9-4-12 **SPECIFIC STANDARDS:** In all special flood hazard areas where base flood elevation data has been provided as set forth in Section 09-4-050(b), "Basis for Establishing Special Flood Hazard Areas," or Section 9-4-070(b) "Use of Other Base Flood Data," the following provisions are required: (Ord. 07-17)

(a) Residential Construction.

1) New construction and substantial improvement of any residential structure shall have the lowest floor (including basement) elevated to or above the base flood elevation, with certification provided to the Administrator by a registered professional engineer, architect, or land surveyor.

2) Require within any AO Zone on the City's FIRM that all new construction and substantial improvements of residential structures have the lowest floor (including basement) elevated above the highest adjacent grade at least as high as the depth number specified in feet on the City's FIRM (at least two (2) feet if no depth number is specified).

3) Require adequate drainage paths around structures on slopes, to guide flood waters around and away from proposed structures within Zones AH and AO.

(b) Nonresidential Construction.

1) New construction and substantial improvement of any commercial, industrial or other nonresidential structure shall either have the lowest floor (including basement) elevated to or above the level of the base flood elevation; or, together with attendant utility and sanitary facilities, shall:

i. Be floodproofed so that below the base flood elevation the structure is watertight with walls substantially impermeable to the passage of water;

ii. Have structural components capable of resisting hydrostatic and hydrodynamic loads and effects of buoyancy; and

iii. Be certified by a registered professional engineer or land surveyor that the design and methods of construction are in accordance with accepted standards of practice for meeting the provisions of this paragraph. Such certifications shall be provided to the Public Works Director and include the specific elevation (in relation to mean sea level) to which such structures are floodproofed.

2) Require within any AO Zone on the City's FIRM that all new construction and substantial improvements of nonresidential structures: (a) have the lowest floor (including basement) elevated above the highest adjacent grade at least as high as the depth number specified in feet on the City's FIRM (at least two feet if no depth number is specified) or (b) together with attendant utility and sanitary facilities be completely floodproofed to that level to meet the floodproofing standard specified in Subsection (b)(1)(i) and (ii), above.

3) Require adequate drainage paths around structures on slopes, to guide flood waters around and away from proposed structures within Zones AH and AO.

(c) Openings in Enclosures Below the Lowest Floor. For all new construction and substantial improvements, fully enclosed areas below the lowest floor that are usable solely for parking of vehicles, building access, or storage in an area other than a basement, and which are subject to flooding, shall be designed to automatically equalize hydrostatic flood forces on exterior walls by allowing for the entry and exit of floodwaters. Designs for meeting this requirement must either be certified by a registered professional engineer or architect or must meet or exceed the following minimum criteria:

1) A minimum of two (2) openings having a total net area of not less than one (1) square inch for every foot of enclosed area subject to flooding shall be provided;

2) The bottom of all openings shall be no higher than one (1) foot above grade; and

3) Openings may be equipped with screens, louvers, valves, or other coverings or devices provided that they permit the automatic entry and exit of floodwaters.

(d) Manufactured Homes.

1) All manufactured homes to be placed within Zone A must be elevated and anchored to resist flotation, collapse or lateral movement and capable of resisting the hydrostatic and hydrodynamic loads. Methods of anchoring may include, but are not limited to use of over-the-top or frame ties to ground anchors. This requirement is in addition to applicable State and local anchoring requirements for resisting wind forces. Specific requirements may be:

i. Over-the-top ties be provided at each of the four corners of the manufactured home, with two additional ties per side at intermediate locations, with manufactured homes less than fifty (50) feet long requiring one additional tie per side;

ii. Frame ties be provided at each corner of the home with five additional ties per side at intermediate points, with manufactured homes less than fifty (50) feet long requiring four additional ties per side;

iii. All components of the anchoring system be capable of carrying a force of 4,800 pounds; and

iv. Any additions to the manufactured home be similarly anchored.

2) All manufactured homes or those to be substantially improved which are proposed to be located on sites (a) outside of a manufactured home park or subdivision, (b) in a new

manufactured home park or subdivision, (c) in an expansion to an existing manufactured home park or subdivision, or (d) in an existing manufactured home park or subdivision on which a manufactured home has incurred "substantial damage" as the result of a flood, shall meet the following requirements:

i. Within Zones A1-30, AH, and AE, such manufactured homes must be elevated on a permanent foundation such that the lowest floor of the manufactured home is elevated to or above the base flood elevation and be securely anchored to an adequately anchored foundation system to resist flotation, collapse and lateral movement;

ii. Within Zones A1-30, AH and AE, such manufactured homes to be placed or substantially improved on sites in existing manufactured home parks or subdivisions that are not subject to the provisions in Subsection (i), above must be elevated so that either:

A. The lowest floor of the manufactured home is at or above the base flood elevation; or

B. The manufactured home chassis is supported by reinforced piers or other foundation elements of at least equivalent strength that are no less than thirty-six (36) inches in height above grade and is securely anchored to an adequately anchored foundation system to resist flotation, collapse, and lateral movement.

(e) Recreational Vehicles.

1) Recreational vehicles placed on sites within Zones A1-30, AH, and AE must either: (a) be on the site for fewer than 180 consecutive days, (b) be fully licensed and ready for highway use, or (c) meet the permit requirements of Section 9-4-8 and the elevation and anchoring requirements for resisting wind forces of Section 9-4-12(d)(2)(i).

2) A recreational vehicle is ready for highway use if it is on its wheels or jacking system, is attached to the site only by quick disconnect type utilities and security devices, and has no permanently attached additions.

9-4-13 **FLOODWAYS:** Located within special flood hazard areas established in Section 9-4-5(b) are areas designated as floodways. Since the floodway is an extremely hazardous area due to the velocity of flood waters which carry debris, potential projectiles, and erosion potential, encroachments, including fill, new construction, substantial improvements and other development are prohibited unless the following requirements are met: (Ord. 07-17)

(a) Certification by a registered professional engineer or land surveyor is provided demonstrating through hydrologic and hydraulic analyses, performed in accordance with standard engineering practice, that

encroachments shall not result in any increase in flood levels during the occurrence of the base flood discharge.

(b) All fill, new construction, and substantial improvements, or other development shall comply with all applicable flood hazard reduction provisions of Sections 9-4-11and 9-4-13.

(c) The Public Works Director may permit encroachments within the adopted regulatory floodway that would result in an increase in base flood elevations, provided the Public Works Director has applied for and been granted a conditional FIRM and floodway revision through FEMA, under the provisions of 44 CFR Chapter 1, Section 65.12, of the National Flood Insurance Regulations.

9-4-14 **PENALTY:** Any person, firm or corporation, whether as principal, agent, employee or otherwise, violating or causing or permitting the violation of any of the provisions of this ordinance shall be guilty of a class B misdemeanor, and upon conviction thereof shall be punishable by a fine, or by imprisonment in the Davis County Jail, or by both as provided by law. Such person, firm, or corporation shall be deemed to be guilty of a separate offense for each day during which any portion of any violation of this ordinance is committed, continued, or permitted by such person, firm, or corporation, and shall be punishable as herein provided. (Ord. 07-17)

TITLE X

SYRACUSE CITY
LAND USE ORDINANCE

CHAPTER 1

GENERAL PROVISIONS

10-1-010: Title

10-1-020: Effect of Chapter

10-1-030: Declaration of Purpose

10-1-040: Scope of Title

10-1-050: Interpretation

10-1-060: Separability and Validity Clause

10-1-070: Effect of Other Ordinances and Regulations

10-1-080: Effect of Private Covenants and Agreements

10-1-090: Compliance Regarding Violation

10-1-100: Penalties

10-1-110: Delegation

10-1-010: TITLE. This Title shall be known as the "Syracuse City Land Use Ordinance" and may be so cited and pleaded. (1991)

10-1-020: EFFECT OF CHAPTER. The provisions of this Chapter are general in nature and, as applied, affect this entire Title. (1991) (Ord. 08-07)

10-1-030: DECLARATION OF PURPOSE. The purposes of this Title, and the reasons for which Syracuse City deems it necessary and thereby designates and enacts said Title as outlined herein, is to preserve and promote the health, safety, convenience, order and the general welfare of the City of Syracuse, Utah, its present and future inhabitants, and the public generally and, in particular, without limitation; to: (Ord. 08-07)

(A) Encourage and facilitate orderly growth and expansion

(B) Secure economy

(C) Provide adequate light, air, and privacy to meet the ordinary or common requirements of happy, convenient, and comfortable living of the inhabitants of Syracuse and to foster a wholesome social environment

(D) Enhance the economic well-being of the City and its inhabitants

(E) Facilitate adequate provisions for transportation, water, sewage, schools, parks, recreation, and other public requirements

(F) Prevent the overcrowding of land and the undue concentration of population

(G) Stabilize and improve property values

(H) Encourage the development of an attractive and beautiful community (1991)

10-1-040: SCOPE OF TITLE. The City Council designed and enacted this Title in accordance with a General Plan for Syracuse City to designate, regulate, and restrict: (Ord. 08-07)

(A) The use of land

(B) Conditional uses

(C) The erection, construction, reconstruction, alteration, location, and uses of buildings

(D) The height, size, and bulk of buildings and other structures hereafter erected or altered

(E) The size of lots, courts, yards, and other open spaces and the percentage of the lot that occupants may use

(F) The height, bulk, and location of objects of natural growth where the City deems such objects as hazardous to life or property (Ord. 08-07)

(G) The density and distribution of population

10-1-050: INTERPRETATION. In interpreting and applying the provisions of this Title, the City Council declares the requirements contained herein are the minimum requirements for the purposes set forth, unless otherwise specifically stated. If, in the course of administration hereof, a question arises as to the meaning of any phrase, section, chapter, or zone boundary, The City Council empowers the Land Use Administrator to interpret the Title. (Ord. 08-07)

10-1-060: SEPARABILITY AND VALIDITY CLAUSE. If any chapter, section, subsection, sentence, clause, phrase, or part of this Title is for any reason held invalid by a court of competent jurisdiction, such judgment shall not affect, impair, or invalidate the remaining provisions of this Title but shall confine its operation to the specific chapter, section, sentence, clause, or part of this Title held invalid and shall not affect the validity of the remaining portion of this Title. (Ord. 08-07)

10-1-070: EFFECT OF OTHER ORDINANCES AND REGULATIONS. Wherever the provisions of any other applicable statute, ordinance, or regulation establish higher or more restrictive standards than the provisions of this Title, the provisions of such other statute, ordinance, or regulation shall govern. (Ord. 08-07)

10-1-080: EFFECT OF PRIVATE COVENANTS AND AGREEMENTS. This Title shall not nullify the more restrictive provisions of private covenants and agreements entered into between private persons but shall prevail over any such provisions that are less restrictive. Enforcement of private covenants and agreements affects only the parties in interest and the City or its agents may not assume the responsibility for enforcement. (1991) (Ord. 08-07)

10-1-090: COMPLIANCE REGARDING VIOLATION. Whenever a violation of this Title occurs, or a person submits an allegation of such an occurrence, the complaining individual may file a written complaint, stating fully the causes and bases thereof, with the Community

Development Department which shall record properly such complaint and timely investigate and take action thereof as provided by this Title. (Ord. 06-17) (Ord. 08-07)

10-1-100: **PENALTIES.** Unless specifically otherwise provided, any person, firm, or corporation, whether as principal, agent, employee, or otherwise, violating, causing, or permitting the violation of any of the provisions of this Title or of a decision of a Land Use Authority, City Council, or Board of Adjustment, shall be guilty of a Class C misdemeanor and, upon conviction thereof by a court of competent jurisdiction, shall be punishable to the full extent allowed by law. Said court shall deem such person, firm, or corporation to be guilty of a separate offense for each and every day during which they commit, continue, or permit any portion of any violation of this Title, punishable as herein provided. (Ord. 06-17) (Ord. 06-27) (Ord. 08-07)

10-1-110: **DELEGATION.** The City of Syracuse may, by resolution or ordinance from time to time, entrust the administration of this Title, in whole or in part, to any officer of Syracuse City without amendments to this Title. (2001) (Ord. 06-17) (Ord. 06-27) (Ord. 08-07)

CHAPTER 2

DEFINITIONS

10-2-010: Purpose

10-2-020: Interpretation

10-2-030: General

10-2-040: Definitions

10-2-010: PURPOSE. The purpose of this Chapter is to clarify and define certain terms and words as used in this Title. When a definition is not found in this Chapter, the reader shall use the common meaning of the word. (1991) (Ord. 08-07)

10-2-020: INTERPRETATION. In the event it is unclear as to the meaning of a word or term, it shall be the responsibility of the Land Use Administrator to determine the official interpretation. If any person disagrees with the interpretation of the Land Use Administrator, it shall be his/her right to either apply for an amendment to this Title to clarify the portion in question or file a timely petition with the District Court for final interpretation. (Ord. 08-07)

10-2-030: GENERAL. All provisions, terms, phrases, and expressions contained in this Chapter shall be liberally construed to accomplish the purposes of the Title. For the purposes of this Title, words used in the present tense shall also include the past tense and likewise words used in the singular shall also include the plural. The word "person" shall include corporation, partnership, or other legal entity. The words "used" or "occupied" shall include in their meanings intended, arranged, or designed for use or occupancy. (1991) (Ord. 08-07)

10-2-040: DEFINITIONS. As used in this Title, the words and phrases defined in this Section shall have the following meanings unless the context clearly indicates a contrary meaning. Words not included herein but defined in the Building Code shall be construed as defined therein. (Ord. 08-07)

ACCESSORY USE OR BUILDING: A use or structure on the same lot width that is subordinate in area, extent, or purpose to the principal or main building served and of a nature customarily incidental to the principal use or structure. (Ord. 06-17)

ADULT DAY CARE, HOME: A day-care facility on residential property to provide non-medical care and supervision daily of six (6) or fewer persons eighteen (18) years of age and over on less than a twenty four (24) hour basis. (Ord. 10-02)

AFFECTED ENTITY: A county, municipality, independent special district, local district, school district, interlocal cooperation entity, specified public utility, and the Utah Department of Transportation, as defined in Utah Code Section 10-9a-103, as amended. (Ord. 08-07)

AGRICULTURE: Tilling of the soil, the raising of crops, horticulture, and gardening but not including the keeping or raising of animals or fowl, except household pets, and not including any agricultural industry or business, such as fruit-packing plants, fur farms, animal hospitals, or similar uses.

ALTERATION: Any change in the construction of, or addition to, a building which would permit an increase in capacity or change of use. (Ord. 08-07)

ANIMAL CLINIC: An establishment for the care, grooming, and treatment of small animals and household pets, with all facilities within a completely-enclosed building, except for vehicle parking. (Ord. 11-02)

ANIMAL HOSPITAL: An establishment for the care and treatment of animals, including household pets, livestock, and commercial poultry, with all facilities within a completely enclosed building, except for exercising runs and parking for vehicles. (Ord. 11-02)

AREA: the aggregate of the maximum horizontal cross section within given boundaries. (Ord. 11-02)

ASSISTED-LIVING FACILITY: A single family residential-dwelling unit, consistent with single family residential zoning and structural appearance, occupied on a twenty-four (24)-hour per-day basis by elderly persons in a family-type arrangement under the supervision of one (1) or more resident-dwelling managers. The facility provides assistance with activities of daily living and social care to residents who require protected living arrangements and are capable of achieving mobility sufficient to exit the facility without the assistance of another person. In addition, residents may receive intermittent nursing care, administration of medication from licensed providers, and support services promoting residents' independence and self-sufficiency. The dwelling shall comply with all State standards governing health and safety, Furthermore, the dwelling shall have a license from the State of Utah Department of Health as an Assisted Living Type-I facility and shall operate as a Type-I facility. (Ord. 08-07)

BOARD OF ADJUSTMENT: A group of five (5) individuals residing in Syracuse and appointed by the Mayor to function as the Syracuse City Board of Adjustment.

BUFFER YARD: A required portion of land, together with structures and landscaping, for the purpose of separating land uses so as to maintain the integrity of the proposed development of land. (Ord. 08-07)

BUILDABLE AREA: That portion of a lot or parcel that is eligible to place a building or structure and complies with setbacks of the applicable zone. (Ord. 11-02)

BUILDING: Any walled or roofed structure intended for or used for the shelter, housing, or enclosure of any person, animal, chattel, or property of any kind.

BUILDING HEIGHT: As defined in the International Residential Building Code adopted by Syracuse City. The vertical distance from grade plane to the average height of the highest roof surface. (Ord. 08-07)

BUILDING PRINCIPAL: The main or primary building upon a lot or the building that houses the main or primary use upon the lot. This includes all appendages to a principal building constructed as an architectural and integral part thereof.

CERTIFICATE OF OCCUPANCY: Authority granted by the building official to occupy or use a building upon satisfying city ordinances and all site plan and building code requirements. (Ord. 06-17)

CHILD DAY CARE CENTER: Any building or premises used regularly for the custodial care of four (4) or more children for more than four (4) hours per day for profit. (Ord. 11-02)

CHILD DAY CARE, HOME: A child day care facility operated on residential premises on less than a twenty four (24) hour basis. (Ord. 06-17) (Ord. 10-02)

CHURCH, SYNAGOGUE, TEMPLE: A building used primarily for public worship by any religious body.

CITY COUNCIL: The elected City Council of Syracuse, Utah. This term may also include the Mayor of Syracuse.

CLINIC, DENTAL AND MEDICAL: A building in which an associated group of physicians, dentists, and allied professional assistants carry on their professions including a dental or medical laboratory. Clinic does not include inpatient care or operating rooms for major surgery. (Ord. 06-17) (Ord. 08-07)

CLUSTER SUBDIVISION: Homes grouped together on at least five (5) acres of land, exempt from the minimum lot-size requirements of a regular subdivision, grouped in a manner that allows for common open space at the same density allowed by zone.

COMMON SPACE: Land area within a development, not individually owned or dedicated for public use, for which its design and intended use as an amenity shall be for the direct benefit of the residents in such development. Common space may be either natural or functional as a designed element of a development that has a functionally described and planned benefit. Examples include landscaped areas that provide visual relief, shade, screening, buffering, or another environmental amenity and nature trails, exercise trails, and facilities, e.g. swimming pools, tennis courts, club houses, pavilions, and golf courses. (Ord. 08-07)

COMMERCIAL VEHICLE: A motor vehicle, trailer, or semi-tractor/trailer used or maintained for business, compensation, or profit to transport passengers or property with a manufacturer's gross weight of ten thousand and one (10,001) or more pounds. (Ord. 06-17) (Ord. 08-07)

CONDITIONAL USE: Uses, other than permitted uses, allowed in a specific zone that may not be compatible in some areas without certain conditions as set forth in the Land Use Ordinance for those uses that mitigate or eliminate the detrimental impact as a result of its unique characteristic or potential impact on surrounding neighbors. (Ord. 06-17) (Ord. 08-07) (Ord. 11-02)

CONDOMINIUM: The ownership of a single unit in a multi unit residential, commercial, or industrial project together with an undivided common interest in the common areas and facilities of the property. (Ord. 08-07)

DAY-CARE CENTER: See Child Day Care Center. (Ord. 11-02)

DAY-CARE, HOME: See Child Day Care, Home. (Ord. 11-02)

DEVELOPMENT AGREEMENT: A written contract between the City and a developer which sets forth the respective terms, conditions, and obligations pertaining to a development in the City. (Ord. 06-17)

DEVELOPMENT REVIEW COMMITTEE (DRC): A group of appointed City officials, or their designees, given review and consultation responsibility concerning proposed development projects, including C-2 site plans and Private Residential Development subdivisions. (Ord. 06-17) (Ord. 08-07)

DWELLING: A building or portion thereof designed and used for residential occupancy, including single-family, two- (2) family, and multi-family, but not

boarding, rooming, or lodging houses, tents, trailers, motels, cottage camps, or similar structures designed and used primarily for transient residential uses. (Ord. 11-02)

DWELLING, SINGLE-FAMILY: A building designed with accommodations for and occupied by one (1) family only.

DWELLING, TWO (2)-FAMILY: A building under single ownership containing two (2) dwelling units, designated for occupancy by not more than two (2) families. (Ord. 11-10)

DWELLING, TWO (2) FAMILY (DUPLEX/TWIN HOME): A single-family dwelling attached to another single-family dwelling by a common wall or floor with both dwellings located on the same lot. (Ord. 11-02)

DWELLING, MULTI-FAMILY: A building containing not less than two (2) dwelling units. (Ord. 03-08) (Ord. 08-07)

DWELLING GROUP: A group of two (2) or more detached buildings used as residences located on a parcel of land under one (1) ownership and having a yard or court in common.

DWELLING UNIT: A building or portion thereof that provides separate and independent living, cooking, sleeping, eating, and sanitation facilities for one (1) family.

ELDERLY PERSON: A person sixty (60) years of age or older. (Ord. 08-07)

ELEVATION, BUILDING: An architectural rendering of the front, side, or rear façade of a building, including dimensions, features, materials, and colors. (Ord. 06-17)

EXACTION (CONSTITUTIONAL TAKING): Actions by the City involving the physical taking or exaction of private-real property that might require compensation to a private real-property owner because of: (Ord. 11-02)

(A) The Fifth or Fourteenth Amendments of the Constitution of the United States; (Ord. 11-02)
(B) Article I, Section 22, of the Utah Constitution, or (Ord. 11-02)
(C) Any recent court rulings governing the physical taking or exaction of private real property by a government entity. (Ord. 11-02)

FAMILY:

A. One (1) individual living alone or one (1) but not more than one (1) at the same time, group of individuals described in the following subsections who together occupy a single-family dwelling unit as one (1) nonprofit housekeeping unit and who share common living, sleeping, cooking, and sanitation facilities.
    1. A head of household and all persons related to the head of household by blood, marriage, adoption, guardianship, or other duly authorized custodial relationship, and not more than two (2) additional related or unrelated persons, including, but not limited to, personal care or personal-service providers.
    2. Up to four (4) related or unrelated persons and any children of either individual, if any.
B. In applying this definition, the existence of more than one (1) kitchen in a dwelling unit shall create a presumption that two (2) housekeeping units exist in the dwelling. “Family” does not include:
    1. Any society, club, fraternity, sorority, association, lodge, combine, federation, coterie, or like organization.

2. Any number of individuals whose association is temporary or seasonal in nature.
3. Any number of individuals who are in a group-living arrangement as a result of criminal offenses. (Ord. 04-12) (Ord. 11-02)

FARM ANIMAL KEEPING: The keeping of animals and fowl, such as commonly used for food or fiber production or as a beast of burden, for recreational pleasure. (Ord. 12-03)

FARM INDUSTRY: Generally all phases of farm operation including, but not necessarily limited to, the keeping and raising of animals and/or fowl for domestic or commercial use, e.g. fur farms, livestock-feed yards, pig farms, dairy farms, and similar uses as well as any accessory uses thereto, except commercial slaughter. (Ord. 08-07)

FENCE: A structure used as a boundary, screen, separation, protection or confinement, or means of privacy constructed of posts, rails, and a barrier consisting of lumber, vinyl, wire mesh, masonry, or similar fencing materials. (Ord. 11-02)

FIELD DRAIN: A pipe or similar conduit laid in undeveloped areas for the purpose of draining the ground. (Ord. 08-07)

FLOOR AREA: The sum of all areas of several floors of a building, including basements, mezzanines, and intermediate floored tiers and penthouses of head-room height, measured from the exterior faces of exterior walls or from the centerline of common walls separating buildings. The floor area, however, shall not include areas used for parking of vehicles and areas devoted exclusively to the housing of mechanical equipment for heating, ventilating, and other service uses for the building. (Ord. 11-02)

FRONTAGE: The distance along the right-of-way line between the two (2) side lot lines of a parcel measured along the street, or streets of a corner lot, to which the parcel shall have access. (Ord. 06-17) (Ord. 08-07)

GARAGE SALE: A sale of personal belongings in a residential zone, which sale is conducted by a bona fide resident of the premises. (Ord. 11-02)

GENERAL PLAN: A document adopted by the City that sets forth general guidelines for proposed future development of land within the City as set forth in Utah Code Annotated, also referred to as the "Master Plan." (Ord. 06-17) (Ord. 08-07) (Ord. 11-02)

GENERAL PLAN USE MAP: A map adopted by the City Council which identifies the current, proposed, or desired future land uses in the City and guides zoning and development in the City. (Ord. 06-17)

GOVERNING BODY: The Syracuse City Council.

GRADE, FINISH (ADJACENT GROUND ELEVATION): The lowest point of elevation of the finished surface of the ground, within the area between a building and a line five (5) feet from building. (Ord. 11-02)

GRADE, NATURAL: The elevation of the surface of ground created through the action of natural forces and not a result from man-made cuts, fills, excavation, grading, or similar earth-moving processes. The City Engineer of Syracuse City shall determine natural grade in every instance where necessary. (Ord. 11-02)

HEAD OF HOUSEHOLD: One (1) individual who occupies a dwelling unit and has a parent/child relationship, grandparent/child relationship, or a legal-marriage relationship with another individual occupying the same dwelling unit and/or is an owner occupant. (Ord. 11-02)

HOME OCCUPATION: The use of a portion of one's dwelling or accessory building, studio, or workroom to conduct business activity. (Ord 02-26)

HOMEOWNERS ASSOCIATION: An association operating under recorded land agreements through which each lot owner of a planned development, condominium development, subdivision or other described land area is automatically subject to a charge for a proportionate share of the expenses for the organization's activities, such as maintaining a common property. (Ord. 09-16)

HOMEOWNERS ASSOCIATION, ACTIVE: A recorded and legally-bound homeowners association with an elected board of representatives who maintain an active, annual application with the Syracuse City Community Development Department every year during the same month. (Ord. 09-16)

HOUSEHOLD PETS: Animals and fowl customarily allowed in the home for the sole pleasure and enjoyment of the occupants but not raised or kept for commercial purposes or for food. (Ord. 06-17)

IMMEDIATE FAMILY MEMBER: Father, Mother, Brother, Sister, Son, Daughter.

INSTITUTION: A public or private building devoted to an organization, establishment, foundation, society, or the like, which promotes a particular cause or program, especially one of a public, educational, or charitable character. (Ord. 11-02)

JUNK: Any scrap, waste, reclaimable material, or debris whether or not stored or used in conjunction with dismantling, processing, salvaging, storing, or disposing or other use or disposition. Junk includes, but is not limited to, tires, batteries, furniture, tools, paper, rags, plastics, cordage, scrap iron or other metal, glass, building materials, salvage materials, dismantled equipment, machinery and appliances or parts thereof, brush, wood and lumber, solid waste, and vehicles and parts thereof. (Ord. 06-17)

JUNK YARD: The use of any lot, portion of a lot, or tract of land for the storage, keeping, or abandonment of junk, including scrap metals or other scrap material, or for the dismantling, demolition, or abandonment of automobiles, other vehicles, or machinery or parts thereof, provided it does not include such uses that are clearly accessory and incidental to any agricultural use permitted in the district.

KENNEL, COMMERCIAL: Any parcel of land, at least five (5) acres in size, on which the owner retains three (3) or more dogs that are at least four (4) months old. (Ord. 11-02)

KENNEL, RESIDENTIAL: Any residential lot or premises on which the owner retains three (3) dogs that are at least four (4) months old. (Ord. 08-07) (Ord. 11-02)

KITCHEN: Any room or space used, intended, or designed for cooking or preparation and/or serving of food, including such areas as wet bars and snack bars, notwithstanding whether such room or space is within a primary dwelling

structure or a structure accessory to the dwelling and finished as an addition to the living, working, or recreational space of the dwelling as permitted under the provisions of applicable Land Use Ordinances. Facilities that establish use of a room or space as a kitchen include refrigerators, stoves, other cooking appliances, built-in cabinets, sinks, garbage disposal units, 220 voltage and/or natural gas supply lines, or any combination thereof for the purpose of using any room or space as a kitchen. (Ord. 11-02)

LAND DRAIN: A pipe or similar infrastructure designed to collect subsurface water in developed areas. (Ord. 08-07)

LAND USE AUTHORITY: Any person, board, or commission designated by the City Council to act upon a land use application. Land Use Authority shall be the Planning Commission unless otherwise designated in the Ordinance. (Ord. 06-17)

LAND USE ADMINISTRATOR: That person designated by the Syracuse City Council to perform the duties and responsibilities as described in this Title.

LAND USE ORDINANCE: Titles 8 through 10 of the Syracuse City Ordinances, or a predecessor ordinance governing planning, zoning, or development of land but does not include the General Plan. (Ord. 11-02)

LANDSCAPING: The design and placement of ornamental fixtures such as fountains, ornamental walls, fences, or benches along with the planting of vegetative materials, trees, shrubs, grass, flowers, etc. (Ord. 08-07)

LOT, BUILDING: A parcel of land, legally divided and approved by the Syracuse City Council as recorded in the Davis County Recorder's Office, which is of such dimensions as to comply with the minimum requirements of this Title for area, width, and depth, where applicable for the zone in which it resides, and having frontage on a public street or approved private street. (Ord. 06-17)

LOT, CORNER: A lot situated at the junction of and abutting on two (2) or more streets.

LOT LINES: The property lines bounding a lot. For purposes of establishing yard spaces, all right-of-way lines for streets shall be the lot lines of abutting property.

LOT WIDTH: The width of a lot along a line parallel to the frontage thereof and measured at the minimum front setback line.

MANUFACTURED HOME: A single-family dwelling unit fabricated in one (1) or more sections in a location other than the home site by assembly-line production techniques after June 15, 1976, to standards established by the U.S. Department of Housing and Urban Development. (See Section 10-6-020(C)) (Ord. 08-07)

MASONRY: Stucco, brick, or stone. (Ord. 06-17)

NET ACREAGE: The total land area available for development after excluding twenty (20) percent assigned to the City in the form of roads and other public easements.

NET DENSITY: The number of allowable building lots in a zone per net acre. (Example: Eight and three tenths [8.3] net acres times three and seventy-nine hundredths [3.79] allowable lots in the R-2 zone equals thirty-one and forty-six

hundredths [31.46] allowable lots, or thirty-one [31] allowable lots rounding down to the nearest whole number. [i.e. 8.3 X 3.79 = 31.46 = 31]). (Ord. 08-07)

NONCONFORMING USES: A use that legally existed before its current land-use designation, has been maintained continuously since the time any applicable Land Use Ordinances changed, and does not conform to the regulations that now govern the use of the land because of one or more subsequent changes to said Ordinances. (Ord. 11-02)

NONCONFORMING BUILDING LOT: A parcel of land of record that was held in separate ownership from adjacent property and was a legal building lot on the effective date of this Title, the dimensions of which do not meet the requirements for a building lot in the new zone in which it resides. This Title shall deem adjacent properties in the same ownership, but described under separate deeds, to be one (1) property. (Ord. 08-07)

NONCOMPLYING STRUCTURE: A structure that legally existed before its current land-use designation and, because of one or more subsequent changes to this Title, does not conform to the setback, height restrictions, or other regulations, excluding those regulations that govern the use of land. (Ord. 11-02).

OFFICE, PROFESSIONAL: A place intended primarily for the conduct of administration or services by a business enterprise including the storage, display, or sales of limited goods or merchandise as the secondary focus of business. (Ord. 06-17) (Ord. 08-07)

OPEN SPACE: Any area of land characterized by openness that provides for that portion of the human environment, through dedication to preservation of said openness, in order to enhance urban, suburban, or rural areas, and provide important physical, recreational, conservation, aesthetic, or economic value or assets. (Ord. 08-07)

(A) Functional Open Space. Any area of land improved and dedicated for public or private use and designed as an amenity for the benefit of the residents of a development or citizens of the City. Examples include landscaped aesthetic areas, City parks, playgrounds, and ball fields.

(B) Natural Open Space. Any area of land, essentially unimproved and not occupied by structures or man-made impervious surfaces, dedicated or reserved in perpetuity for public or private enjoyment as a preservation of open area.

(C) Cluster Subdivision Open Space. Open space, either natural or functional, provided to compensate for the lot size reductions from minimum lot size requirements or increases in overall gross density.

(D) Public Open Space. Open space owned by a public agency, such as the City of Syracuse, and maintained by such agency for the use and enjoyment of the general public.

ORDINANCE: Planning and zoning regulations or other laws and requirements, adopted by the City, that carry the force of law and are binding upon all who visit, reside in, or own property in the City. (Ord. 06-17)

PARKING LOT: An open area, other than a street, used for the temporary parking of more than four (4) automobiles and available for public use, whether free, for compensation, or as an accommodation for clients or customers.

PARKING SPACE (OFF-STREET PARKING): A space located off any public right-of-way, which is at least nine (9) feet by twenty (20) feet in size, for parking of any motor vehicle.

PAYDAY LENDING/CHECK CASHING SERVICES: A business that conducts transactions of cashing a check for consideration or extending a deferred deposit loan and shall include any other similar types of businesses licenses by the State pursuant to the Check Cashing and Deferred Deposit Lending Registration Act. (Ord. 11-10)

PERMITTED USE: Uses allowed as a matter of right and listed as permitted uses in the various zone specifications. Any use not specifically identified in this Title shall be prohibited. (Ord. 11-02)

PERSON WITH A DISABILITY: A person who has a physical or mental impairment that substantially limits one (1) or more of their major-life activities, including a person having a record of such impairment or being regarded as having such an impairment. This definition shall not include any person with impairment due to the current illegal use of, or addiction to, any federally-controlled substance, as defined by federal law. (Ord. 11-02)

PLANNING COMMISSION: A group of seven (7) individuals, residing in Syracuse City, appointed by the Mayor of Syracuse, with the advice and consent of the City Council, to function as the Syracuse City Planning Commission.

PRE-SCHOOL: Any building or premises used for the instruction and care for compensation of not more than sixteen (16) children, per session per teacher at any one time from the age of three (3) through six (6) years for up to four (4) hours without the serving of meals. (Ord. 11-02)

PRINCIPLE OF REGRESSION: A standard property assessment valuation principle, as established by the International Association of Assessing Officers, which states that dissimilar properties within the same general classification in the same area will adversely affect the better property.

PRIVACY FENCE: A fence constructed so that over fifty (50) percent of the fence area is of a solid substance. The maximum allowable height of a privacy fence is six (6) feet. If a “picket” style fence is used as a privacy fence, picket spacing shall be no more than one (1) inch apart. Shrubs or hedges are not considered privacy fences. (Ord. 08-07)

PRIVATE RESIDENTIAL DEVELOPMENT: A subdivision approved by the City, as allowed within a particular zone, which meets all the requirements of Chapter 15 of this Title with other standards as determined by the City Council by means of a development agreement. (Ord. 06-17) (Ord. 08-07)

PROFESSIONAL, NON-RETAIL SERVICE: A business that provides a professional service, rather than retail, such as medical or educational (academic or recreational classes). (Ord. 11-02)

PUBLIC: That which is under the ownership of the United States Government, Utah State or any subdivision thereof, Davis County, or Syracuse City (or any departments or agencies thereof). (Ord. 11-02)

QUASI-PUBLIC BUILDING OR USE: Any facility or use conducted by a nonprofit, religious, or charitable organization for the benefit of the general public or having partial government involvement or ownership. (Ord. 06-17)

RESEARCH PARK: Areas zoned for technology research and scientific development and linked to business and academic collaboration research endeavors. (Ord. 06-17)

REASONABLE ACCOMMODATIONS: A change in a rule, policy, practice, or procedure necessary to afford a person with a disability equal access opportunity to use and enjoy a dwelling as defined in this Section: (Ord. 10-02)

(A) "Reasonable" means that a requested accommodation will not undermine the legitimate purposes of existing zoning regulations notwithstanding the benefit the accommodation would provide to a person with a disability.

(B) "Necessary" means the applicant must show that, but for the accommodation, one (1) or more persons with a disability likely will not have an equal opportunity to enjoy housing of their choice.

(C) "Equal Opportunity" means achieving equal results as between a person with a disability and a non-disabled person.

RECREATIONAL PARK, PRIVATE: An area of land, with few or no buildings, set aside and kept in its natural state or designed, developed, and reserved for the enjoyment and recreational use by or ornamental purposes of only certain individuals with a financially-legal interest and responsibility for its maintenance. (Ord. 11-02)

REHABILITATION/TREATMENT FACILITY: A facility licensed by or contracted by the State of Utah to provide temporary occupancy and supervision of adults or juveniles in order to provide rehabilitation, treatment, counseling, or educational services. Without limitation, such services may include rehabilitation, treatment, counseling, or assessment and evaluation services related to delinquent behavior, alcohol and drug abuse, sex offenders, sexual abuse, or mental health. (Ord. 08-07)

RESIDENTIAL FACILITY FOR PERSONS WITH A DISABILITY: A residence, in which more than one (1) person with a disability resides, licensed or certified by the Utah State Department of Human Services under Title 62A, Chapter 2, Licensure of Programs and Facilities or licensed or certified by the Department of Health under Title 26, Chapter 21, Health Care Facility Licensing and Inspection Act.

SCREEN: Walls, fences, hedges, or plantings that insure harmony with adjacent development or conceal storage or parking areas, utility installations, or other unsightly development.

SETBACK: The shortest horizontal distance between the boundary lines of a lot and the building or structure or part thereof.

SEXUALLY ORIENTED BUSINESS: Any business as defined in Title 5, Chapter 4, of the Syracuse City Municipal Code. (Ord. 06-17)

SIGN: Any words, lettering, parts of letters, figures, numerals, phrases, sentences, devices, designs, pictures, trade names, or trademarks by which anything is made known, such as those used to designate an association, a firm, corporation, profession, business, service, commodity, product, or any type of publicity or propaganda, whether placed on the ground, rocks, trees, stumps, or other natural objects or on a building, wall, roof, frame, support, fence, or other manmade structure, and visible from any public street, public

highway, or public rights-of-way. For purposes of this Title, the word "sign" does not include flags, pennants, or insignias of any nation, state, city, or other political unit or of a nonprofit organization. It shall not include an official notice, issued by any court or public body or officer, directional warning, or information sign or structure required or authorized by law. (Ord. 11-02)

SITE PLAN: A schematic scaled drawing of a commercial, residential, industrial, office, or institutional development which meets requirements of Chapter 4 of this Title. (Ord. 06-17) (Ord. 08-07)

STABLE, PRIVATE: A detached accessory building for the keeping of animals belonging to or used by the property owner or lessee and not for rent or for the stabling of same for profit.

STABLE, PUBLIC: A building for the keeping of animals for profit.

STREET, PUBLIC: An open way, space, and/or thoroughfare designed primarily for vehicular travel provided for or dedicated to and/or accepted by Syracuse City or the State of Utah for public use.

STRUCTURAL ALTERATION: Any change in the shape or size of any portion of a building or of the supporting members of the building or structure such as walls, columns, beams, arches, girders, floor joists, or roof rafters.

STRUCTURE: The building or construction of an edifice or building of any kind or the artificial building up of any piece of work or composition of parts joined together in some definite manner. A structure, however, for the purposes of this Title, shall not include stairs or ramps. (Ord. 08-07) (Ord. 10-02)

SWIMMING POOL: A structure for public or personal recreational purposes as defined by the International Residential Building Code. (Ord. 06-17)

TEMPORARY COMMERCIAL USES: The occasional use of a building or land for retail sales {see Section 10-7-050}. (Ord. 08-07) (Ord. 11-02) (Ord. 11-10)

USE: The purpose for the design, arrangement, or intention of any premises or building for occupancy or maintenance. (Ord. 11-02)

VARIANCE: The relaxation of the strict application of the terms of this Title, granted by the Board of Adjustment, with respect to mechanical requirements, such as setbacks, yard and area requirements, building height, parking and loading space requirements, etc., where specific physical conditions unique to the site of the lot would create an unreasonable burden by making its development for permitted uses difficult or impossible. (Ord. 06-17) (Ord. 08-07)

YARD: A space on a lot or parcel, unoccupied and unobstructed by a building or structure from the finished grade upwards, except as otherwise provided in this Title. (Ord. 11-02)

YARD, FRONT: An open, unoccupied yard extending the full width of the lot adjacent to and measured perpendicularly from the front lot line and having, at no point, a depth of less than the minimum required horizontal distance between the front lot line, or its tangent, and the closest permissible location of the principle building. Measurement of said distance shall be by a line at right angles to the front lot line, or its tangent. (Ord. 11-02)

.

YARD, REAR: A yard extending the full width of the lot adjacent to and measured perpendicularly from the rear lot line and having, at no point, a depth of less than the minimum required horizontal distance between the rear-lot line, or its tangent, and the closest permissible location of the principle building. Measurement of said distance shall be by a line at right angles to the rear-lot line, or its tangent. Such yard shall include all land area between the rear lot line and the closest permissible location of the principle building. On lots that are other than rectangular in shape, the required minimum rear yard may be an average of the distance measured from the rear corners of a dwelling to the nearest point of the rear lot line; however, the shortest distance used in determining the average may not be less than fifteen (15) feet. Each lot shall have only one (1) rear yard. (Ord. 11-02)

YARD, SIDE: A yard between a principle building and side-lot line extending from the required front yard to the required rear yard, or rear lot-line on lots with no rear-yard requirement, adjacent to and measured perpendicularly from the side lot line. Measurement of side yards shall be horizontally from, and at right angles to, the nearest point on the side-lot line towards the closest permissible location of the principle building. (Ord. 11-02)

ZERO LOT LINE DEVELOPMENT: Residential dwellings arranged on lots with one (1) side wall of the building located on the property line. (Ord. 06-17)

ZONE: A portion of the City of Syracuse given a zone designation which provides for the regulation of locations, heights, bulk, and sizes of buildings and other structures, percentage of the lots people may occupy, the size of lots, courts, or other open space, the uses of buildings and structures, and the uses of land. (Ord. 06-17)

CHAPTER 3

ADMINISTRATION AND ENFORCEMENT

10-3-010: Effect of Chapter

10-3-020: Administration and Enforcement

10-3-030: Building Permits Required

10-3-040: Site Plan Required with Application for Permit

10-3-050: Certificate of Occupancy

10-3-060: Temporary Occupancy

10-3-070: License and Permits to Conform to the Land Use Ordinance

10-3-080: Enforcement Procedures

10-3-090: Exactions (Constitutional Takings)

10-3-010: EFFECT OF CHAPTER. This Chapter affects the entire Title with respect to the Administration thereof and establishes the responsibility for such administration.

10-3-020: ADMINISTRATION AND ENFORCEMENT – LAND USE ADMINISTRATOR.

(A) The Land Use Administrator or his designee shall represent Syracuse City in carrying out the stated purposes of this Title and in so doing shall require all persons desiring to build to acquire the appropriate permits. The Land Use Administrator or his designee shall not grant a permit for the construction or alteration of any building or structure if such construction or alteration would violate any of the provisions of this Title. (Ord. 08-07)

(B) It shall be within the power and authority of the Land Use Administrator or his designee to inspect or cause to be inspected all plans for the construction or repair of buildings, to visit all buildings in the course of construction, to enforce or cause to be enforced all provisions of this Title pertaining thereto, particularly with respect to the location requirements, and to uphold and enforce any decision in the administration of this Title, entering actions in the court when necessary. Failure to do so shall not legalize any violation of such provisions. Also, the Land Use Administrator or his designee may institute any appropriate action or proceedings to prevent the unlawful erection, construction, reconstruction, alteration, repair, conversion, maintenance, or use of any building, sign, structure, or land in violation of this Title or any amendment thereto or to restrain, correct, or abate such violation, prevent the occupancy of such building, structure, or land, or prevent any illegal act, conduct of business, or use in or about such premises. The City Council may designate the Land Use Administrator as a Land Use Authority with authorization to function as so directed. (Ord. 06-17) (Ord. 08-07)

10-3-030: BUILDING PERMITS REQUIRED. No construction of a building or structure subject to the provisions of the International Residential Code or International Building Code shall commence until the City issues a building permit. Additions or alterations to any existing building or structure, including mechanical, electrical, or plumbing components identified in the International Building Code, shall also require a building permit prior to the commencement of any work. (Ord. 08-07)

10-3-040: SITE PLAN REQUIRED WITH APPLICATION FOR PERMIT. All building permit applications for any structure shall include a site plan in duplicate, signed and dated by the applicant, one (1) of which the City shall return to the applicant with corrections or stipulations, if any, and one (1) of which shall be for the use of the Building Department. Such site plan shall be drawn to scale and show the actual dimensions of the applicable lot, the size of existing buildings or structures, if any, the dimensions of proposed buildings, the location of driveways into the property, the location and plan for off-street parking facilities, the location and width and name of abutting streets, the location and width of utility easements, and such other information as may be necessary to accurately locate the lot and provide for the enforcement of this Title. (Ord. 08-07)

10-3-050: CERTIFICATE OF OCCUPANCY. No one shall occupy or proceed to use any building or accessory structure until it is in full compliance with the requirements of this Title and until the City issues a Certificate of Occupancy.

(A) A Certificate of Occupancy is a prerequisite to the application and/or receipt of a business license.

(B) It shall be unlawful for any person, firm, or corporation to make connection to or furnish water or electrical service for any new building except for temporary use incidental to construction.

(C) The City shall grant residential building occupancy upon compliance with Section 8-2-18 of the Syracuse City Code. (Ord. 06-17) (Ord. 08-07) (Ord. 09-10)

10-3-060: TEMPORARY OCCUPANCY. When circumstances or conditions preclude the completion of weather-related items, the Land Use Administrator or his designee may, with the approval of the City Fire Chief, issue a temporary occupancy permit for a period of time not exceeding six (6) months to allow the completion of items identified by the City Building Department. (Ord. 08-07)

10-3-070: LICENSE AND PERMITS TO CONFORM TO THE LAND USE ORDINANCE. All officials and employees of Syracuse City vested with the duty or authority to issue permits and licenses shall conform to the provisions of this Title and shall issue no permit or license for use, building, or purposes where the same would be in conflict with the provisions of this Title. The Land Use Administrator or his designee shall approve all applicable permits and licenses. Any such permit or license, if issued in conflict with the provisions of this Ordinance, shall be null and void.

10-3-080: ENFORCEMENT PROCEDURES. Any violations of the provisions of this Title shall be subject to the enforcement remedies and penalties provided by this Title and by Utah Law, including any of the following: (Ord. 08-07)

(A) Withhold Permits. The City may deny or withhold all permits, certificates, or other forms of authorization pertaining to any land or improvements when an uncorrected violation exists pursuant to this Title or to a condition or qualification of a permit, certificate, approval or other authorization previously granted by the City Council, Planning Commission, Appeals and Variance Hearing Officer, or other City officer. The City may, instead of withholding or denying an authorization, grant such authorization subject to the condition that the violation be corrected. The provisions of this section shall apply regardless of whether the original applicant or current owner is responsible for the violation in question.

(B) Revoke Permits. Any permit may be revoked when the Land Use Administrator or his designee determines that actions taken thereunder do not conform to plans, specifications, or conditions of the permit; that the same was

procured by false representation or was issued by mistake; or that any of the provisions of this Title are being violated.

1. Written notice of such revocation shall be served upon the owner, his or her agent, or contractor, or upon any person employed at the site of the building or structure for which such permit was issued, or shall be posted in a prominent location; and, thereafter, no such construction shall proceed.

2. Upon revocation of a building permit which was issued by mistake, the owner shall meet with the Land Use Administrator or his designee to determine in what respect a mistake was made. When plans are in conflict with ordinances, resolutions, regulations, or requirements, and when construction has not progressed to a stage where modification of the plans would require substantial alteration of the structures in place, the plans shall be modified to conform to all applicable requirements. When construction has progressed to a stage where compliance would require substantial alteration of construction in place, the owner shall meet with the Land Use Administrator or his designee to negotiate possible changes in the plans which would more nearly conform to applicable ordinances, resolutions, regulations, or requirements.

3. When a mistake has been made calculating the fee for any permit, the proper fee shall be charged.

(C) Stop Work. In accordance with its power to stop work under the building code, the City may stop work, with or without revoking permits, on any building or structure on any land on which exists an uncorrected violation of a provision of this Title or permit or other form of authorization issued hereunder.

(D) Revoke Plan or Other Approvals. Where a violation of this Title involves failure to comply with approved plans or conditions upon which the approval of such plans was made subject, the City may, upon notice to the applicant and other known parties in interest (including any holders of building permits affected) and after a hearing, revoke the plan or other approval, or condition its continuance on strict compliance, the provision of security, or such other conditions as the City may reasonably impose.

(E) Remove Signs. When a sign is illegally located within a City right-of-way, on any City-owned property, or in the case of an emergency or an identified hazard, the Land Use Administrator or his designee may, without notice, cause the immediate removal of such dangerous or defective sign which presents a hazard to the public or which is in the public right-of-way.

1. Such action by the City shall be at the expense of the owner and shall include the actual cost of repair or removal of the sign, plus fifteen (15) percent of such amount for administrative and overhead costs.

2. If the owner fails to pay the amount due within thirty (30) days from the date of billing, the City may initiate legal action against the owner as provided by law to collect such costs and expenses, including interest at the legal rate and reasonable attorney fees.

(F) Injunctive Relief. The City may seek an injunction or other equitable relief in the district court to stop any violation of this Title or of a permit, certificate, or other form of authorization granted hereunder.

(G) Abatement. The City may seek a court order from the district court in the nature of mandamus, abatement, or other action or proceeding to abate or remove a violation or to otherwise restore the premises in question to the condition in which they existed prior to the violation.

(H) Penalties. Violation of any of the provisions of this Title shall upon conviction be punishable as a class C misdemeanor.

(I) Other Remedies. The City shall have such other remedies as are and as may be from time to time provided by Utah law or City ordinance for the violation of any provision of this Title.

(J) Remedies Cumulative. These remedies shall be cumulative.

10-3-090: EXACTIONS (CONSTITUTIONAL TAKINGS). The City shall carefully consider each claim, in fairness to any private property owner who believes a constitutional taking occurred, in view of the uncertainty and expense involved in defending lawsuits alleging a constitutional taking. However, the City shall preserve the ability to lawfully require dedication or exaction of property consistent with federal and state constitutions. The criteria set forth in this Title shall be objectively and fairly construed in reviewing any claim that a specific action by the City requires payment of just compensation, and decisions rendered shall be advisory and neither expand or limit the scope of the City's liability for a constitutional taking. The City may impose an exaction or exactions on proposed land-use development if: (Ord. 11-02)

(A) An essential nexus exists between a legitimate governmental interest and each exaction; and (Ord. 11-02)

(B) Each exaction is roughly proportionate, both in nature and extent, to the impact of the proposed development. (Ord. 11-02)

CHAPTER 4

ADMINISTRATIVE AND DEVELOPMENT REVIEW PROCEDURES

10-4-010: Purpose

10-4-020: Scope

10-4-030: General Application Requirements

10-4-040: Public Hearings and Meetings

10-4-050: Noticing

10-4-060: General Plan Amendments

10-4-070: Zoning Map and Text Amendments

10-4-080: Conditional Use Permits

10-4-090: Site Plan Review

10-4-100: Variances

10-4-110: Nonconforming Uses or Noncomplying Structures

10-4-120: Appeal of Administrative Decisions

10-4-130: Appeal of Exactions (Constitutional Takings)

10-4-140 Land Use Decisions and Appeal Process

10-4-010: PURPOSE. The purpose of this Chapter is to set forth procedures for considering various types of land use and development applications to assure that the City processes applications of the same type on a uniform basis consistent with applicable law. Applicants are entitled to approval of land uses if their requests conform to the requirements of the applicable zoning and Land Use Ordinances and they submit a complete application with all related fees, unless: (Ord. 08-07) (Ord. 10-02) (Ord. 11-02)

(A) The Land Use Authority finds that approval would jeopardize compelling, countervailing public interest, or (Ord. 11-02)

(B) The Planning Commission formally initiates proceedings to amend its Land Use Ordinances in a manner that would prohibit approval of such requests prior to submittal of the applications. However, the City shall process an application without regard to proceedings initiated to amend its Land Use Ordinances if: (Ord. 11-02)

1. One hundred eighty (180) days had passed since initiation of the proceedings. (Ord. 11-02)
2. The proceedings did not result in an enactment that prohibited the approval of such applications as submitted. (Ord. 11-02)

10-4-020: SCOPE. The City shall review and approve submitted Applications for land use and development as provided in this Chapter. (Ord. 08-07) (Ord. 10-02)

10-4-030: GENERAL APPLICATION REQUIREMENTS. The following general requirements shall apply to any application required by this Title. (Ord. 08-07)

(A) Application Forms. Submitted applications shall be on forms provided by the Community Development Department and with required documentation in such numbers as reasonably required for a particular type of application. Applicants shall first submit all applications rezone requests, conditional use, building, or other land-use permits to the Department for review to assure compliance with the requirements of the Land Use Ordinances and shall include the name, address, and telephone number of the applicant as well as applicant's agent, if any, and name and address of every person or company the applicant represents. (Ord. 10-02) (Ord. 11-02)

(B) City Initiated Applications. The Community Development Director, Planning Commission or City Council may initiate any action under this Title without an application from a property owner. Notice, hearing and other procedural requirements of this Chapter shall apply to an application initiated by the City.

(C) Development Review Sequence. The City shall not consider any subdivision, site plan, or other development application unless: (Ord. 10-02)

1. The applicable zone of the subject property allows the requested approval. (Ord. 10-02)

2. Where permitted by this Title, the applicant also submits application for a proposed zoning map amendment that would, if approved, allow the proposed request. (Ord. 10-02)

(D) Accurate Information. All documents, plans, reports, studies and information provided to the City by an applicant in accordance with the requirements of this Title shall be accurate and complete.

(E) Determination of Complete Application. After receipt of an application, the Community Development Department shall determine whether it is complete. If the application is not complete, the Department shall notify the applicant in writing and shall identify the deficiencies by specifying the required information and advise the applicant that the City will take no further action on the request until submission of a complete application. (Ord. 10-02)

(F) Fees. The applicant shall pay the City a fee, as provided in the City's schedule of fees as adopted by the City Council, upon filing an application. Application fees shall be amounts reasonably determined to defray actual costs incurred by the City to review plans and specifications, act upon applications, and conduct inspections. The Department shall return any application as incomplete if not accompanied by a required fee. Fees shall be non-refundable except as provided in subsection (G) below. Applications initiated by the City shall not require fees. (Ord. 10-02)

(G) Remedy of Deficiencies. If an applicant fails to correct specified deficiencies within thirty (30) days after notification thereof the City may deem the application withdrawn and shall return it to the applicant upon request. The Department shall refund application fees to the applicant, less any fee established to cover the cost of determining completeness of the application. (Ord. 10-02)

(H) Substantial Action Required. If an applicant has not taken substantial action to obtain approval within six (6) months after filing, the application shall expire and any vested rights accrued thereunder shall terminate. (Ord. 10-02)

(I) Decision Date. The date of a decision or recommendation shall be the date of the decision making body or official. (Ord. 10-02)

(J) Validity. The continuing validity of an approval of a land-use application is conditioned upon the applicant proceeding after approval to implement the approval with reasonable diligence. (Ord. 11-02)

(K) Extensions of Time. Unless otherwise prohibited, upon written request and for good cause shown, any decision making body or official having authority to grant approval of an application may, without any notice or hearing, grant extensions of any time limit imposed by this Title on such application, its approval, or the applicant, provided the Department receives such a request or initiates the extension prior to the date of expiration. The total period of time granted by any such extension or extensions shall not exceed half the length of the original time period. (Ord. 10-02)

(L) Pending Ordinance Amendments.

1. When the City formally initiated proceedings to amend the zoning map or text of this Title a person who thereafter files an application that the proposed amendment may affect shall not rely on the existing zoning map or text under construction. (Ord. 10-02)

   (a) A formal initiation for a proposed zoning map or text amendment shall be the date of publication of a Planning Commission or City Council agenda, as the case may be, in a newspaper of general circulation in the area that notices said proposal as required in this Chapter. (Ord. 10-02)

   (b) The filing date of an application shall be the submission date of all materials required for the application, set forth in this Title. (Ord. 10-02)

2. An application affected by a pending amendment to the zoning map or text of this Title shall be subject to the following requirements:

   (a) The City shall not act upon such applications until six (6) months after noticing a proposed amendment in a Planning Commission or City Council agenda, as the case may be, in a newspaper of general circulation in the area unless: (Ord. 10-02)

      i. The applicant voluntarily agrees to amend their application to conform to the requirements of the proposed amendment; or (Ord. 10-02)

      ii. The City enacts or defeats the proposed amendment sooner. (Ord. 10-02)

   (b) If the City enacts a pending amendment to the zoning map or text of this Title within six (6) months of the publication date of a Planning Commission or City Council agenda, as the case may be, an affected application, filed during the pending amendment shall conform to the enacted amendment. (Ord. 10-02)

   (c) If the City does not enact a pending amendment to the zoning map or text of this Title is within six (6) months of the publication date of a Planning Commission or City Council agenda, as the case may be, the City shall no longer consider the proposed amendment pending and shall consider any affected application without regard to the previously pending amendment. (Ord. 10-02)

3. The Community Development Department shall give written notice to an affected applicant of a pending amendment to the zoning map or text of this Title, informing them that their request may require changes in order to conform to a proposed zoning map or text amendment and that copies of the pending legislation are available at the Community Development Office. (Ord. 10-02)

4. All provisions herein shall comply with the provisions of Utah Code Ann. ' 10-9a-509, as amended. (Ord. 10-02)

(M) Substantial Action Required. If an applicant has not taken substantial action to obtain approval within six (6) months after filing, the application shall expire and any vested rights accrued thereunder shall terminate. (Ord. 10-02)

10-4-040: PUBLIC HEARINGS AND MEETINGS. The City shall schedule and hold public hearings or meetings required under this Title, as the case may be, subject to the requirements of this section. (Ord. 08-07) (Ord. 10-02)

(A) Public Hearings:

1. Scheduling. The City shall schedule a public hearing within a reasonable time, in light of the complexity of the application submitted, the number of other applications received that require a hearing, available staff resources, and applicable public-notice requirements. (Ord. 10-02)

2. Procedures. The following procedures shall apply to a public hearing conducted pursuant to this Title. (Ord. 10-02)

(a). Any person may appear at a public hearing and Submit evidence, either individually or as the agent of a person or an organization. Each person who appears at a public hearing shall state his or her name and, if appearing on behalf of a person or an organization, state the name of the person or organization they represent. (Ord. 10-02)

(b). The body or official conducting a public hearing may exclude testimony or evidence that it finds to be unduly repetitious or otherwise inadmissible.

(c.). The body or official conducting a public hearing may, upon the body's or official's own motion, postpone the hearing. An applicant may request and receive one (1) postponement. Thereafter the body or official conducting the public hearing shall grant any postponements at their discretion. (Ord. 10-02)

3. Withdrawal of Application. An applicant may withdraw an application at any time prior to action on the application by the decision making body or official. The City shall not refund application fees if prior to withdrawal, staff already began a review of the application or mailed, posted, or published a notice for a public hearing on the application. (Ord. 10-02)

4. Record. Except where required otherwise by statute, the body or official conducting the public hearing shall record the proceedings thereof by any appropriate means. Anyone may receive a copy of the public hearing record upon request and payment of a fee to cover the cost of duplication of the record. The minutes, tape recordings, all applications, exhibits, papers and reports submitted in any proceeding before the decision making body or official, and the decision of the decision making body or official shall constitute the record thereof. (Ord. 10-02)

5. General Requirements for Findings and Decisions. The decision-making body or official shall take action in compliance with any time limits established in this Title. Except for those public bodies who make decisions by motion or ordinance, all decisions shall be in writing and shall include at least the following elements: (Ord. 10-02)

    (a) A summary of evidence presented to the decision making body or official;

    (b) A statement of applicable development standards;

    (c) A statement of findings of fact or other factors considered, including the basis upon which the decision-making body determined such facts and specific references to applicable standards set forth in this Title or other titles of the Syracuse City Municipal Code; and (Ord. 10-02)

    (d) A statement of approval, approval with conditions, or disapproval, as the case may be.

6. Notification. The City shall provide notice of a decision by the decision making body or official to an applicant within a reasonable time. (Ord. 10-02)

(B) Other Public Meetings

1. Scheduling. The City shall schedule public meetings within a reasonable time in light of the complexity of the application submitted, the number of other applications received, available staff resources, and applicable public notice requirements. (Ord. 10-02)

2. Withdrawal of Application. An applicant may withdraw an application at any time prior to action on the application by the decision making body or official. The City shall not refund application fees if prior to withdrawal staff already began a review of the application or mailed, posted, or published notice for a public meeting on the application. (Ord. 10-02)

3. Record Except where required otherwise by statute, the body or official conducting the public meeting shall record the proceedings thereof by any appropriate means. Anyone may receive a copy of the public meeting record upon request and payment of a fee to cover the cost of duplication of the record. The minutes, tape recordings, all applications, exhibits, papers and reports submitted in any proceeding before the decision making body or official, and the decision of the decision making body or official shall constitute the record thereof. (Ord. 10-02)

4. Notification. The City shall provide notice of a decision by the decision making body or official to an applicant within a reasonable time. (Ord. 10-02)

10-4-050: NOTICING. Required notice of public meetings and hearings for permitted land use or conditional use applications and ordinances shall include and comply with the following provisions. (Ord. 08-07) (Ord. 09-10)

(A) Mailing List and Labels. The applicant for a major conditional use shall provide the Community Development Department with an approved list of all owners of real property located within three hundred (300) feet of the boundary of the subject property, as shown on the latest assessment rolls of the County Recorder. The applicant shall pay to the City a fee in the amount of the actual costs incurred by

the City in providing the notice, and shall bear sole responsibility to ensure the accuracy of the property owner list. (Ord. 09-10) (Ord. 10-02) (Ord. 11-02)

(B) Applicant Notification. For all major conditional use applications, the City shall give notice to the applicant of the date, time and place of each public hearing and public meeting to consider the application, and of any final action on a pending application. (Ord. 09-10) (Ord. 10-02) (Ord. 11-02)

(C) Notice to Third Parties. For site specific major conditional use applications, the City shall mail notice to the owners of record for each parcel within a three hundred (300) foot radius of the subject property, including third party owners of property within the three hundred (300) foot radius but outside of Syracuse City boundaries. (Ord. 09-10) (Ord. 10-02) (Ord. 11-02)

(D) Intent to Prepare or Amend General Plan. Before preparing a proposed general plan or general plan amendment the City shall provide ten (10) calendar days notice of its intent to prepare or amend the general plan to the following listed entities or persons. Such notice shall comply with the requirements of Utah Code Ann. 10-9a-203, as amended. The City shall provide notice of intent to designated entities or persons before preparing the plan or amendment to allow those entities and persons to submit information to the City. The entities or persons the City shall notify are: (Ord. 10-02)

1. Each affected entity (as defined in Section 10-2-040);

2. The Automated Geographic Reference Center (as defined in Utah Code Ann. § 63F-1-506;

3. The association of governments of which the City is a member; and

4. The State Planning Coordinator (appointed pursuant to Utah Code Ann. § 63J-4-202).

(E) General Plan Adoption or Amendment. The City shall provide advance notice of the date, time and place for public hearings and meetings regarding a general plan adoption or amendment as follows:

1. The City shall provide notice of the first public hearing to consider the adoption or modification of all or any portion of the general plan at least ten (10) calendar days before the public hearing. Notice shall be: (Ord. 10-02)

   (a) Published in a newspaper of general circulation in the area;

   (b) Mailed to each affected entity (as defined in Section 10-2-040);

   (c) Posted in at least three (3) public locations within the City and, if practical, on the City's website. (Ord. 10-02)

2. The City shall provide notice of each public meeting regarding the adoption or modification of all or any part of the general plan at least twenty-four (24) hours before the meeting. Notice shall be: (Ord. 10-02)

   (a) Submitted to a newspaper of general circulation in the area; and

   (b) Posted in at least three (3) public locations within the City and, if practical, on the City's website. (Ord. 10-02)

(F) Adoption or Amendment of Land Use Ordinance. The City shall provide advance notice of the date, time and place for public hearings and meetings regarding a land use ordinance adoption or amendment as follows:

1. The City shall provide notice of the first public hearing to consider the adoption of any modification of a land use ordinance at least ten (10) calendar days before the public hearing. Notice shall be: (Ord. 10-02)

    (a) Mailed to each affected entity (as defined in Section 10-2-4);

    (b) Posted in at least three public locations within the City and, if practical, on the City's website;

    (c) Published in a newspaper of general circulation in the area, or mailed at least ten (10) days before the public hearing to each property owner whose land the ordinance change would directly affect, and each adjacent property owner within three hundred (300) feet. (Ord. 10-02)

2. The City shall provide notice regarding the adoption or modification of a land use ordinance at least twenty-four (24) hours before the meeting. The City shall post such notices in at least three (3) public locations within the City and, if practical, on the City's website. (Ord. 10-02)

(G) Subdivision Plat Amendment or Approval. The City shall provide advance notice of the date, time and place for public hearings and meetings regarding a proposed subdivision or an amendment to a subdivision as follows:

1. The City shall mail notice at least ten (10) calendar days before the public hearing to the owners of record of each parcel within three hundred (300) feet of the subject property; and (Ord. 10-02)

2. Not less than ten (10) calendar days before the public hearing, the applicant shall post on the property one (1) City-provided sign along each street on which the subject property has frontage. If the subject property does not abut a street, the applicant shall post the sign on a nearby street as determined by the Community Development Department. The sign shall be of sufficient size, durability, print quality and location as to reasonably give notice to those passing by. (Ord. 10-02)

3. The City shall mail notice to each affected entity (as defined in Section 10-2-040) of a public hearing to consider a preliminary plat describing a multiple-unit residential development or a commercial or industrial development.

(H) Plat Amendments that Vacate, Alter or Amend an Existing Street. For any proposal to vacate, alter or amend a platted street, the City shall hold a public hearing and give notice of the date, place and time of the hearing in accordance with the noticing requirements provided in Subsection 10-4-050(G) and additionally:

1. Mail notice to each affected entity (as defined in Section 10-2-040);

2. Publish notice once a week for four (4) consecutive weeks before the hearing in a newspaper of general circulation in the City.

3. Comply with all other requirements set forth in Utah Code Ann. §§ 10-9a-208, -608 and -609, as amended.

(I) Notice of Land Use Applications. The City shall notice General Plan map and Zoning map amendment applications at least ten (10) calendar days before the public hearing. The City shall notice requests for major conditional uses, site plan and site plan amendment approvals, and variances at least three (3) calendar days before the public meeting. (Ord. 10-02) (Ord. 11-02)

(J) Challenge of Notice. If no one challenges a notice given under authority of this Section in accordance with applicable appeal procedures within thirty (30) days after the meeting or action for which notice was given, all affected parties shall deem the notice as adequate and proper. (Ord. 10-02)

10-4-060: GENERAL PLAN AMENDMENTS. (Ord. 08-07)

(A) Purpose. The City Council previously adopted the Syracuse City General Plan, which sets forth procedures for amending the same. For purposes of this Section, amendment shall include the addition of new elements to the General Plan and any comprehensive revisions to or adoption of same. (Ord. 10-02)

(B) Authority. The City Council, as the Land Use Authority, may from time to time amend the General Plan as provided in this section. Such amendments may include any matter within the scope of the General Plan. (Ord. 10-02)

(C) Initiation. Anyone may propose amendments to the General Plan as provided in this section. (Ord. 10-02)

(D) Procedure. City staff shall process and consider General Plan amendments as provided in this subsection. (Ord. 10-02)

1. An applicant shall submit a request to the Community Development Department on a form established by the Department along with any fee established by the City's schedule of fees. The City Council, Planning Commission, or authorized City staff may initiate a General Plan amendment at any time without submittal of an application or payment of any fee. Anyone proposing General Plan amendments shall do the survey and analysis work necessary to justify the proposed amendment. To ensure the Planning Commission and City Council have sufficient information to evaluate a proposed amendment, an applicant shall submit at least the following information: (Ord. 10-02)

(a) For map amendments:

i. an 8-1/2" x 11" map showing the area of the proposed amendment; (Ord. 10-02)

ii. Current copy of County Assessor's parcel map showing the area of the proposed amendment;

iii. Mapped inventory of existing land uses within the area of the proposed amendment and extending a half (½) mile beyond such area; (Ord. 10-02)

iv. Correct property addresses of parcels included within the area of the proposed amendment;

v. Written statement specifying the potential use of property within the area of the proposed amendment;

vi. Written statement explaining why the existing General Plan designation for the area is no longer appropriate,

desirable, or feasible; and

vii. Analysis of potential impacts of the proposed amendment on existing infrastructure and public services such as traffic, streets, intersections, water and sewer, storm drains, electrical power, fire protection, garbage collection, and such other matters as the City may require from time to time. (Ord. 10-02)

(b) For text amendments:

i. Written statement showing the desired language change and written statement explaining why existing General Plan language is no longer appropriate or feasible; (Ord. 10-02)

ii. Analysis of potential impacts of the proposed amendment; and (Ord. 10-02)

iii. Map showing affected geographic areas based on proposed text changes. (Ord. 10-02)

2. After City staff determine the completeness of an application or prior to a City-initiated General Plan amendment proposal, the City shall provide notice of intent to prepare or amend the General Plan in accordance with the provisions of Section 10-4-050. After providing notice of intent to prepare or amend the General Plan, the Community Development Department, as the Land Use Administrator, shall prepare a staff report evaluating the proposed amendment. (Ord. 10-02)

3. The Planning Commission, as the Advisory Body, shall schedule and hold a public hearing on the proposed amendment in accordance with the provisions of Section 10-4-050. After the public hearing, the Planning Commission may modify the proposed amendment before forwarding its recommendation to the City Council. (Ord. 10-02)

4. The City Council may schedule and hold a public hearing on the recommended General Plan amendment in accordance with the provisions of Section 10-4-050. (Ord. 10-02)

(E) Approval Standards. A decision to amend the General Plan is a matter within the legislative discretion of the City Council. After the public hearing described in Subsection (d)(5) of this Section, the City Council may make any modifications to the proposed General Plan amendment that it considers appropriate. The City Council may then adopt or reject the proposed amendment either as proposed by the Planning Commission or after making said modifications. The City Council may also table the matter for further information, consideration or action. (Ord. 10-02)

(F) Appeal. Any person adversely affected by a final decision of the City Council to amend the General Plan may appeal that decision to the district court as provided in Utah Code Ann. § 10-9a-801, as amended.

(G) Effect of Approval. No one shall deem approval of an application to amend the General Plan as an approval of any zone, conditional use, site plan, or other permit. Obtaining approval of a particular zone or permit shall be in accordance with applicable provisions of this Title. (Ord. 10-02)

(H) Effect of Disapproval. City Council denial of an application to amend the General Plan shall preclude a person from filing another application covering substantially the same subject or property, or any portion thereof, for six (6) months from the date of the disapproval. This section shall not limit the City Council, Planning Commission, or authorized City staff from initiating a General Plan amendment at any time. (Ord. 10-02)

10-4-070: ZONING MAP AND TEXT AMENDMENTS. (Ord. 08-07)

(A) Purpose. This section sets forth procedures for amending the provisions of this Title and the zoning map.

(B) Authority. The City Council, as the Land Use Authority may from time to time amend the text of this Title and the zoning map as provided in this section. Amendments may include changes in the number, shape, boundaries, or area of any zoning district, zoning district regulations or any other provision of this Title. The provisions set forth herein shall not apply to temporary zoning regulations that the Council may enact without public hearing in accordance with Section 10-9a-504 of the Utah Code, as amended. (Ord. 10-02)

(C) Initiation. The City Council, Planning Commission, or a property owner may initiate proposed amendments to the text of this Title and the zoning map as provided in Subsection 10-4-070(d) below. (Ord. 10-02)

(D) Procedure. The City shall process and consider zoning text and map amendments as provided in this subsection. (Ord. 10-02

1. An applicant shall submit a request to the Community Development Department on a form established by the Department along with any fee established by the City's schedule of fees. The application shall include at least the following information: (Ord. 10-02)

   (a) Name and address of every person or company the applicant represents. (Ord. 10-02)

   (b) Requested amendment and reasons supporting the request. (Ord. 10-02)

   (c) If the proposed amendment requires a change in the zoning map, the application shall include:

      i. an accurate property map showing present and proposed zoning classifications;

      ii. all abutting properties showing present zoning classifications; and

      iii. an accurate legal description and an approximate common address of the area proposed for rezoning. (Ord. 10-02)

   (d) If the proposed amendment requires a change in the text of this Title, the application shall include chapter and section references and a draft of the proposed text.

2. After City staff determines completeness of the application, the Community Development Department, as the Land Use Administrator, shall prepare a staff report evaluating the application. (Ord. 10-02)

3. The Planning Commission, as the Advisory Body shall schedule and hold a public hearing on the application as provided in Sections 10-4-040 and 10-4-050 of this Chapter. Following the public meeting the Planning Commission shall recommend approval, approval with modifications, or denial of the proposed amendment and shall submit its recommendation to the City Council for review and decision. (Ord. 10-02)

4. The City Council may schedule and hold a public meeting on the application as provided in Sections 10-4-040 and 10-4-050 of this Chapter. At the public meeting the City Council shall approve, approve with modifications, or deny the proposed amendment. (Ord. 10-02)

(E) Approval Standards. A decision to amend the text of this Title or the zoning map is a matter of legislative discretion by City Council and not controlled by any one standard. However, in making an amendment, the City Council should consider: (Ord. 10-02)

1. Whether it would be is consistent with goals, objectives and policies of the City's General Plan; (Ord. 10-02)

2. Whether it would be harmonious with the overall character of existing development in the vicinity of the subject property; (Ord. 10-02)

3. Whether it would be consistent with the standards of any applicable overlay zone. (Ord. 10-02)

4. The extent to which it may adversely affect adjacent property; and (Ord. 10-02)

5. The adequacy of facilities and services intended to serve the subject property, including but not limited to roadways, parks and recreation facilities, police and fire protection, schools, stormwater drainage systems, water supplies, and waste water and refuse collection.

(F) Appeal of Decision. Any party adversely affected by a decision of the City Council to amend the text of this Title or the zoning map may, within thirty (30) days after such decision, appeal to the District Court as provided in Section 10-9a-801 et. seq. of the Utah Code, as amended.

(G) Effect of Approval. Approval of an application to amend the provisions of this Title or the zoning map shall not constitute an approval of any conditional use, site plan, or other permit. Obtaining approval of such permits shall be in accordance with applicable provisions of this Title. (Ord. 10-02)

(H) Effect of Disapproval. City Council denial of an application to amend the provisions of this Title or the zoning map shall preclude the filing of another application covering substantially the same subject or property, or any portion thereof, for one (1) year from the date of the disapproval, unless the Planning Commission determines a substantial change in circumstances occurred to merit consideration of the application or the application is for a change to a different zone. The City Council or Planning Commission may propose any text or zoning map amendment at any time. (Ord. 10-02)

10-4-080: CONDITIONAL USE PERMITS. (Ord. 08-07) (Ord. 10-02)

(A) Purpose. This section sets forth procedures for considering and approving conditional use permits.

(B) Authority. The Community Development Department, as the Advisory Body and/or Land Use Authority, or Planning Commission, as the Land Use Authority, has the authorization to issue conditional use permits as provided in this section. (Ord. 10-02)

(C) Initiation. A property owner, or the owner's agent, may request a conditional use permit as provided in Subsection (D)(1) below.

(D) Procedure. The City shall process and consider an application for a conditional use permit as provided in this subsection. (Ord. 10-02)

1. An applicant shall submit a request to the Community Development Department on a form established by the Department along with any fee established by the City's schedule of fees. The application shall include at least the following information: (Ord. 10-02)

(a) Address and parcel identification of the subject property. (Ord. 10-02)

(b) Zone, zone boundaries and present use of the subject property. (Ord. 10-02)

(c) Complete description of the proposed conditional use. (Ord. 10-02)

(d) A plot plan showing the following:

i. applicant's name;

ii. site address;

iii. property boundaries and dimensions;

iv. layout of existing and proposed buildings, parking, landscaping, utilities, and easements;

v. adjoining property lines and uses within one hundred (100) feet of the subject property; and

vi. any other information determined to be necessary by the Land Use Administrator

(e) Traffic impact analysis, if required by the City Engineer or the Planning Commission.

(f) A statement by the applicant demonstrating how the requested use would meet the approval standards of Subsection (E) of this Section. (Ord. 10-02)

(g) A statement indicating whether the applicant will require a variance in connection with the proposed conditional use.

(h) The Department may request that the applicant provide, at his or her option and expense, any reports and/or studies relating to utilities, traffic impact, school impact, soil and water impact, existing conditions, line-of-sight and building massing, and any other information necessary in order to render a proper decision. (Ord. 10-02)(Ord. 12-02)

2. If the use would require a variance, the applicant shall submit a variance application with the conditional use application. (Ord. 10-02)

3. The Community Development Department, as the Land Use Administrator, shall prepare a staff report evaluating the application(s). (Ord. 10-02)

4. The Community Development Department, as the Land Use Authority shall approve or deny applications for minor conditional uses. The Planning Commission, as the Land Use Authority, shall hold a public meeting and thereafter approve, approve with conditions, or deny major conditional use permit application(s) pursuant to the standards set forth in Subsection (E) below. The Land Use Authority shall limit any conditions of approval to those needed to reasonably ensure the conditional use substantially complies with approval standards. (Ord. 10-02)

5. After the Land Use Authority makes a decision, the Community Development Department shall give the applicant written notice of the decision. (Ord. 10-02)

6. Following the issuance of a conditional use permit, the City Building Inspector shall inspect such use to insure the development is undertaken and completed in compliance with the conditional use permit. (Ord. 12-02)

7. The Department shall maintain a record of all conditional use permits. (Ord. 08-11) (Ord. 10-02)

(E) Approval Standards. The following standards shall apply to the issuance of a conditional use permit. The Land Use Authority may: (Ord. 10-02)

1. Issue a conditional use permit for a use located within a zone that would allow, through regulations, the particular conditional use. (Ord. 10-02)

2. Impose conditions as necessary to prevent or minimize adverse effects upon other property or improvements in the vicinity of the conditional use, the City as a whole, or public facilities and services. These conditions may include but are not limited to conditions concerning use, construction, character, location, landscaping, screening, parking, hours of operation, and other matters relating to the purposes and objectives of this Title. The Land Use Authority shall expressly set forth such conditions in the motion authorizing the conditional use permit. (Ord. 10-02)

3. Approve, approve with conditions, or deny a conditional use, but shall approve it if they can impose reasonable conditions to mitigate the reasonably anticipated detrimental effects of the proposed use in accordance with applicable standards. However, if there are insufficient reasonable conditions the Land Use Authority could impose to substantially mitigate any reasonably anticipated detrimental effects of a proposed conditional use in order to achieve compliance with applicable standards, they may deny the requested conditional use. (Ord. 10-02)

4. The Land Use Authority may request additional information as needed to determine the potential for compliance with requirements of Subsection (3), above. (Ord. 10-02)

5. The Land Use Authority shall review and consider the following factors in determining whether to approve, approve with conditions, or deny a conditional use permit application: (Ord. 10-02)

(a) Compliance of the proposed use with intent of the City's General Plan and the regulations and conditions of this Title; (Ord. 10-02)(Ord. 12-02)

(b) The proposed use at the particular location is necessary or desirable to provide a service or facility that will contribute to the general well-being of the neighborhood and the community; (Ord. 10-02)(Ord. 12-02)

(c) Any reports and/or studies relating to utilities, traffic impact, school impact, soil and water impact, existing conditions, line-of-sight and building massing, and any other information in order to render a proper decision; (Ord. 10-02)(Ord. 12-02)

(d) Safeguards proposed or provided to insure adequate utilities, transportation access, drainage, parking, loading space, lighting, screening, landscaping, open space, fire protection, pedestrian and vehicular circulation and to prevent noxious or offensive omissions such as noise, glare, dust, pollutants, and odor from the proposed facility or use; (Ord. 10-02)(Ord. 12-02)

(e) Impacts on schools, utilities, transportation, traffic, and streets for the proposed site and surrounding area, including the following criteria; appropriate buffering of uses and buildings, proper parking and traffic circulation, and use of building materials and landscaping that are in harmony with the area and compatible with adjoining uses; and (Ord. 10-02)(Ord. 12-02)

(f) Impacts to the health, safety, or general welfare of persons residing or working in the vicinity or injurious to property or improvements in the vicinity. (Ord. 09-10) (Ord. 10-02)(Ord. 12-02)

6. When an applicant proposes a use which requires a conditional use permit on property where a substantially similar nonconforming use legally exists, the Land Use Authority may approve the conditional use permit, subject to the following requirements: (Ord. 10-02)

(a) A determination that the proposed conditional use is substantially similar to the previously permitted nonconforming use. In making such determination, the Land Use Administrator shall consider the nature, characteristics and impact of the existing and proposed uses, and compatibility and compliance of the proposed use with the factors set forth in Subsection (E) of this Section. (Ord. 10-02)

(b) Allowing nonconformance with respect to building setbacks, building height, landscaping and parking space requirements. (Ord. 10-02)

(c) Meeting all current building, construction, engineering, fire, health and safety standards as a condition of approval. (Ord. 10-02)

(d) Notifying the applicable neighborhood association by mail and posting a copy on the affected property or premises. (Ord. 10-02)

(F) Appeal of Decision. Any person adversely affected by a decision of the Land Use Authority regarding the transfer, issuance or denial of a minor conditional use permit may appeal such decision to the Planning Commission by filing written notice of appeal stating the grounds therefore within fifteen (15) days from the date of such final determination. Any person adversely affected by a decision of the

Land Use Authority regarding the transfer, issuance, or denial of a major conditional use permit may appeal such decision to the City Council by filing written notice of appeal stating the grounds therefore within fifteen (15) days from the date of such final determination. (Ord. 10-02)

(G) Effect of Approval. A conditional use permit shall not relieve an applicant from obtaining any other authorization or permit required under this Title or any other title of the Syracuse City Municipal Code.

1. Unless otherwise specified by the Land Use Authority and subject to the provisions relating to amendment, revocation or expiration of a conditional use permit, a conditional use permit shall be of indefinite duration and run with the land. (Ord. 10-02)

(H) Amendments. The procedure for amending any conditional use permit shall be the same as the original procedure set forth in this Section.

(I) Revocation or Suspension. The Planning Commission may revoke or suspend a conditional use permit as provided in Section 10-3-080 of this Title. (Ord. 10-02)(Ord. 12-02)

1. Any of the following shall also be grounds for revocation or suspension:

(a) the use for which the City granted the permit has ceased for one (1) year or more; (Ord. 10-02)

(b) the holder or user of the permit failed to comply with the conditions of approval or any City, State, or Federal law governing the conduct of the use; (Ord. 10-02)

(c) the holder or user of the permit failed to construct or maintain the site as shown on the approved site plan or map; or (Ord. 10-02)

(d) the Planning Commission determined that operation of the use or character of the site was a nuisance or by a Court of competent jurisdiction in any civil or criminal proceeding found it to be a public nuisance. (Ord. 10-02)

2. The Planning Commission shall not revoke a conditional use permit without first holding a public hearing. The City shall notify permittee in writing, served by registered mail or personal service, at least ten (10) days prior to the date of such hearing and the grounds for its convening. At any such hearing, the permittee shall be given an opportunity to testify, call witnesses, and present evidence. Upon conclusion of the hearing, the Planning Commission shall decide whether to revoke or suspend the permit. In the event the determination is to revoke or suspend the permit, the permittee may appeal the decision to the City Council in the manner provided in Section 10-4-140. Revocation or suspension of a permit shall not limit the City's ability to initiate or complete other legal proceedings against the holder or user of the permit. (Ord. 10-02)(Ord. 12-02)

(J) Expiration.

1. Conditional Use Permit approval issued by the City shall expire if any of the following occur:

(a) Applicant does not implement the granted permit within one (1) year of the issued approval date. (Ord. 10-02)

(b) The conditional use of land or structure ceases for any reason for a period of more than one (1) year.

(c) A conditional use permit for a non-physical structure is valid for only the original applicant and not transferable to any other resident or address. Upon termination of a permittee's residency, the conditional use permit shall become invalid. Otherwise, a permit for physical structures remains with the land, and all future owners shall be held to the same standards as originally approved. (Ord. 12-02)

2. The holder of a permit may submit a written request to the Community Development Department, prior to the expiration date of said permit for an extension of up to six (6) months, subject to approval of the Land Use Authority and meeting the requirements under Section 10-3-040 of this Title. If the Land Use Authority does not approve the application, no one shall reapply for the same purpose for a minimum period of twelve (12) months. (Ord. 06-17) (Ord. 06-27) (Ord. 10-02)

10-4-090: SITE PLAN REVIEW. (Ord. 08-07)

(A) Purpose. This section sets forth minimum standards and procedures for all site plan applications and required submittals. These standards and procedures are established to encourage adequate advanced site planning and review in order to assure the highest quality of development for the City. Such standards and procedures are intended to provide for orderly, harmonious, safe and functionally efficient development consistent with priorities, values, and guidelines stated in the various elements of the Syracuse City General Plan, this Title and the general welfare of the community. This section is not intended to so rigidly control design so as to stifle creativity or individual expression, or to cause substantial, unnecessary expense; rather, any control exercised is intended to be the minimum necessary to efficiently achieve the objectives stated herein. (Ord. 08-11)

(B) Authority. As provided in this Section, the Planning Commission is authorized to approve site plans after recommendation of the Land Use Administrator. (Ord. 11-02)

(C) Initiation. A property owner, or the owner's agent, may request approval of a site plan as provided in Subsection (D)(1) below.

1. A site plan shall be required for any of the following uses, unless expressly exempted from such requirement by another provision of this Title:

(a) Any manufacturing use.

(b) Any commercial use.

(c) Any institutional use.

(d) Any multifamily residential use.

2. In situations requiring site plan approval, no building permit for the construction of any building, structure, or other improvement to the site shall be issued prior to approval of a site plan. Furthermore, no clearing, grubbing, grading, drainage work, parking lot construction or other site improvement shall be allowed prior to site plan approval.

(D) Procedure. An application for site plan approval shall be considered and processed as provided in this subsection.

1. A complete application shall be submitted to the office of the Community Development Department in a form established by the Department along with any fee established by the City's schedule of fees. Each application shall consist of one (1) plan set of 22 inch x 34 inch (22" x 34") drawings in addition to three (3) plan sets of 11 inch x 17 inch (11" x 17") drawings. The application and plan sets shall include at a minimum the following documents and information:

(a) A plan set cover sheet showing the entire site plan including a title block showing the name, address, and phone number of the applicant, designer, engineer and any other professionals that contributed to the production of the plans and drawings. The cover sheet shall also include the name (if applicable) and address of the proposed project, and date of preparation of the plans and drawings. A general vicinity map shall be inset on this sheet.

(b) A detailed boundary survey sheet showing the following information:

i. The location and width of existing and proposed abutting streets.

ii. All property and lot lines.

iii. Existing and proposed easements and dedications, adjacent property owners and holding strips.

iv. The location of all existing and proposed structures on the property, including the building height and any provisions to screen roof-based mechanical equipment, and the location of existing structures on adjoining properties.

v. The location of existing fencing and significant existing trees and shrubbery.

vi. The location of off-street parking, driveways, loading facilities, and hard-surfaced areas.

vii. The location of existing and proposed curb, gutter, and sidewalk, curb cuts. If property abuts a state highway, the applicant must obtain approval of the Utah State Department of Transportation Right-of-Way Engineer for location of curb, gutter, and sidewalk. The Utah Department of Transportation must also approve location and number of curb entrances.

viii. The location of refuse container(s). Trash collection sites shall be within an area enclosed by a fence or wall at least six (6) feet in height and impervious to sight, adequate to conceal such facilities from adjacent property and the street. (Ord. 06-17)

ix. The location of vehicular and pedestrian access and circulation including all existing and proposed traffic, pedestrian and road safety signs.

(c) A detailed utilities site plan showing the following information:

i. The location and size of all existing or proposed utilities that will provide service to the project (including location of nearest fire hydrants) consistent with design standards approved by the City.

(d) A detailed landscaping site design plan that shows the following information:

i. Proposed landscaping including identification of plant species and fencing in enough detail that the Planning Commission can review the screening and aesthetic qualities.

ii. Irrigation sprinkler designs indicating the location and service size of secondary water connections. Except in a General Commercial zone, the site shall have a minimum ten (10) percent of the total lot area landscaped.

iii. Location and design of all exterior lighting. No one shall install or allow such lighting to operate in any way that permits the rays of light to penetrate beyond the property on which such light emanates.

iv. Data table showing parcel, building, landscaping, parking areas and percentages, and number of parking stalls required and provided.

(e) Floor Plans and Elevations including exterior finishes and colors.

(f) Required engineer drawings for on- and off-site improvements as directed by the City Engineer.

(g) Traffic study and Geotechnical study as directed by the City Engineer.

(h) Each sheet shall be signed and stamped by a Professional Engineer. (Ord. 08-11) (Ord. 09-09)

(E) Standards for Approval. The City staff may provide advisory comments to the applicant prior to scheduling the site plan on the Planning Commission Agenda. Staff comments will not guarantee or imply approval of any portion of the site plan. The following standards shall apply to the approval of a site plan.

1. The entire site shall be developed at one time unless a phased development plan is approved.

2. A site plan shall conform to applicable standards set forth in this Title. In addition, consideration shall be given to the following:

(a) Considerations relating to traffic safety and traffic congestion:

i. effect of the site development plan on traffic conditions on abutting streets and neighboring land uses, both as existing and as planned;

ii. layout of the site with respect to location and

dimensions of vehicular and pedestrian entrances, exits, driveways, and walkways;

iii. arrangement and adequacy of off-street parking facilities to prevent traffic congestion and compliance with the provisions of City ordinances regarding the same;

iv. location, arrangement, and dimensions of truck loading and unloading facilities;

v. vehicular and pedestrian circulation patterns within the boundaries of the development;

vi. surfacing and lighting of off-street parking facilities; and

vii. provision for transportation modes other than personal motor vehicles, including such alternative modes as pedestrian, bicycle, and mass transit.

(b) Considerations relating to outdoor advertising:

i. compliance with the provisions of Chapter 9 of this Title. Sign permit applications shall be reviewed and permits issued as a separate process. Action may be taken simultaneously with or following site plan review.

(c) Considerations relating to landscaping:

i. location, height, and materials of walls, fences, hedges, and screen plantings to provide for harmony with adjacent development, or to conceal storage areas, utility installations, or other unsightly development;

ii. planting of ground cover or other surfaces to prevent dust and erosion;

iii. unnecessary destruction of existing healthy trees; and

(d) Considerations relating to buildings and site layout:

i. the general silhouette and mass, including location on the site and elevations, in relationship to the character of the district or neighborhood and the applicable provisions of the General Plan; and

ii. exterior design in relation to adjoining structures in height, bulk, and area openings, breaks in facade facing on the street, line and pitch of roofs, the arrangement of structures on the parcel, and appropriate use of materials and colors to promote the objectives of the General Plan relating to the character of the district or neighborhood.

(e) Considerations relating to drainage and irrigation:

i. the effect of the site development plan on the adequacy of the storm and surface water drainage; and

ii. the need for piping of irrigation ditches bordering or within the site.

(f) Other considerations including, but not limited to:

i. buffering;

ii. lighting;

iii. placement of trash containers and disposal facilities; and

iv. location of surface, wall and roof-mounted equipment.

(F) Provision of Curb, Gutter, and Sidewalk. The applicant for site plan approval for multiple dwellings, commercial or industrial structures, and all other business or public and semi-public buildings requiring motor-vehicle access shall provide high-back curb, gutter, and sidewalks along the entire property line which parallels any road or street except for entrances to the property as approved by the Land Use Authority, at which places the applicant shall provide curb cuts in place of high-back curb. (1991) (Ord. 06-17)

(G) Bonding. Applicant shall provide a guarantee of installation and construction of all on-site and off-site improvements required by this Title, or as required by the Land Use Authority, prior to issuance of any building permits or the commencement of any work. The guarantee shall be in a form acceptable to the City and in an amount equal to one hundred ten (110) percent of the estimated cost of all improvements. The guarantee shall assure the installation of improvements within one (1) year of the date of site plan approval, and shall provide a one (1) year warranty pertaining to the installed improvements. It shall be the responsibility of the developer to notify the City when improvements are complete and ready for inspection.

(H) Once all application requirements have been met, redline corrections made, revised plans submitted and city engineer's approval given, the site plan will be scheduled on the planning commission agenda for a public hearing at which public comment will be taken. Notice of the public hearing shall be provided in accordance with chapter 10-4-040 (A) of this title. The planning commission shall receive public comment regarding the site plan and shall approve, approve with conditions or deny the site plan. (Ord. 12-13)

(I) Appeal of Decision. Any person adversely affected by a decision of the Planning Commission regarding approval or denial of a site plan may be appealed to the City Council or District Court in accordance with the provisions of *Utah Code Ann*. § 10-9a-801 et. seq. (Ord. 11-02)

(J) Effect of Approval. Every site for which a site plan has been approved shall conform to such plan.

1. A building permit shall not be issued for any building or structure, external alterations thereto, or any sign or advertising structure until the provisions of this section have been met. Any building permit issued shall expressly require that development be undertaken and completed in conformity with the approved site plan. No structures or improvements may be added to a site that are not included on the approved site plan.

2. All improvements shown on the approved site plan or amended site plan shall be maintained in a neat and attractive manner.

3. Approval of a site plan shall not be deemed an approval of any

conditional use permit or other permit. Approval of such permits shall be obtained in accordance with applicable provisions of this Title.

(K) Amendments. Except as may be provided for elsewhere in this Title, no element of an approved site plan shall be changed or modified without first obtaining approval of an amended site plan as follows:

1. Alteration or expansion of an approved site plan may be permitted by the Planning Commission upon making the following findings: (Ord. 11-02)

   (a) Any proposed use is consistent with uses permitted on the site.

   (b) Existing uses were permitted when the site plan was approved, or have received a conditional use permit.

   (c) The proposed use and site will conform to applicable requirements of the Syracuse City Municipal Code.

   (d) The proposed expansion meets the approval standards of Subsection (E).

   (e) The architecture of the proposed alteration or expansion, and landscaping, site design and parking layout are compatible with facilities existing on the site.

   (f) The site can accommodate any change in the number of employees on the site or any change in impact on surrounding infrastructure.

2. If the Planning Commission cannot make the findings required in Subsection (H)(1) above, a conditional use permit or amended site plan, as the case may be, shall be approved before any alteration or expansion occurs. (Ord. 11-02)

3. Notice of a proposed alteration or expansion should be given as provided in Section 10-4-050 of this Chapter.

4. The procedure for approval of an amended site plan shall be the same as the procedure for approval of an original site plan as set forth in this Section.

5. Except as may be provided elsewhere in this Title, when a site plan is amended, the site shall be brought into compliance with current provisions of this Title.

(L) Revocation. A site plan approval may be revoked as provided in 10-3-080 of this Title.

(M) Expiration. Failure to obtain a building permit within one (1) year of approval of any site plan shall terminate and cancel the prior site plan approval given, whereupon the Planning Commission may require that a new site plan be submitted and approval obtained pursuant to this section. A written request may be submitted to the Planning Commission prior to expiration of the site plan for an extension of up to six months. The Planning Commission can grant such an extension where good cause can be shown. (Ord. 11-02)

10-4-100: VARIANCES. (Ord. 08-07)

(A) Purpose. This section sets forth procedures for considering and approving a variance to the provisions of this Title. Variance procedures are intended to provide a narrowly circumscribed means by which relief may be granted from particular unforeseen applications of the provisions of this Title that create unreasonable hardships.

(B) Authority. The Board of Adjustment is authorized to hear and decide variances to the provisions of this Title as provided in this section.

(C) Initiation. A property owner, or the owner's agent, may request a variance to the provisions of this Title as provided in Subsection 10-4-100(d) below.

(D) Procedure. An application for a special exception shall be considered and processed as provided in this subsection.

1. A complete application shall be submitted to the office of the Community Development Department in a form established by the Department along with any fee established by the City's schedule of fees. The application shall include at least the following information:

(a) The address and parcel identification of the subject property.

(b) The specific feature or features of the proposed use, construction or development that require a variance.

(c) The specific provision of this Title from which the variance is sought and the precise variance being sought.

(d) A statement of the characteristics of the subject property that prevent compliance with the provisions of this Title and result in unnecessary hardship.

(e) A statement of the minimum variation needed to permit the proposed use, construction or development.

(f) An explanation of how the application satisfies each standard set forth in Subsection (E) below.

(g) A plot plan showing the following:

i. applicant's name;

ii. site address;

iii. property boundaries and dimensions;

iv. layout of existing and proposed buildings, parking, landscaping, and utilities; and

v. adjoining property lines and uses within one hundred (100) feet of the subject property.

(h) An elevation plan drawn to scale showing all elevations of existing and proposed structures.

(i) When the variance involves building height, a streetscape

plan showing the height of all buildings within one hundred fifty (150) feet of the subject property.

(j) When a variance involves grade changes a topographical drawing prepared by a licensed surveyor, showing existing topography in dashed lines at two-foot intervals and showing the proposed grade in solid lines at two-foot intervals.

(k) When a variance involves retaining walls, a plan showing all retaining walls, including their height relative to proposed grades.

(l) Any other information identified by the Zoning Administrator to be pertinent to the requested variance.

2. After the application is determined to be complete, the City shall schedule a public hearing before the Board of Adjustment as provided in Section 10-4-040 of this Chapter. Notice of the hearing should be given as provided in Section 10-4-050 of this Chapter.

3. A staff report evaluating the application shall be prepared by the Community Development Department.

4. The Board of Adjustment shall hold a public meeting and thereafter shall approve, approve with conditions or deny the application pursuant to the standards set forth in Section (E) below. Any conditions of approval shall be limited to conditions needed to conform the variance to approval standards.

5. After the Board of Adjustment makes a decision, the Community Development Department shall give the applicant written notice of the decision.

6. A record of all variances shall be maintained in the office of the Community Development Department.

(E) Approval Standards. The following standards shall apply to a variance.

1. The Board of Adjustment may grant a variance only if:

(a) Literal enforcement of this Title would cause an unreasonable hardship for the applicant that is not necessary to carry out the general purpose of this Title;

(b) There are special circumstances attached to the property that do not generally apply to other properties in the same zoning district;

(c) Granting the variance is essential to the enjoyment of a substantial property right possessed by other property in the same zoning district;

(d) The variance will not substantially affect the General Plan and will not be contrary to the public interest; and

(e) The spirit of this Title is observed and substantial justice done.

2. The Board of Adjustment may find an unreasonable hardship

exists only if the alleged hardship is located on or associated with the property for which the variance is sought and comes from circumstances peculiar to the property, not from conditions that are general to the neighborhood. The Board of Adjustment may not find an unreasonable hardship exists if the hardship is self-imposed or economic.

3. The Board of Adjustment may find that special circumstances exist only if the special circumstances relate to the hardship complained of and deprive the property of privileges granted to other properties in the same zoning district.

4. An applicant shall bear the burden of proving that all of the conditions justifying a variance have been met.

5. A use variance may not be granted.

6. In granting a variance, the Board of Adjustment may impose additional requirements on an applicant that will mitigate any harmful affects of the variance, or serve the purpose of the standard or requirement that is waived or modified.

7. A variance more restrictive than that requested may be authorized when the record supports the applicant's right to some relief but not to the extent requested.

(F) Appeal of Decision. Any person adversely affected by a decision of the Board of Adjustment regarding a variance may appeal such decision to the District Court as provided in Utah law.

(G) Effect of Approval. A variance shall not authorize the establishment of any use nor the development, construction, reconstruction, alteration, or moving of any building or structure, but shall merely authorize the preparation, filing, and processing of applications for any approvals or permits that may be required by this Title or other applicable provisions of the Syracuse City Municipal Code.

(H) Amendments. The procedure for amending any variance decision shall be the same as the original procedure set forth in this Section.

(I) Expiration. Variances shall not expire but shall run with the land.

10-4-110: NONCONFORMING USES OR NONCOMPLYING STRUCTURES. (Ord. 08-07) (Ord. 11-02)

(A) Purpose. This section sets forth procedures for determining the existence, expansion or modification of a nonconforming use or noncomplying structure. (Ord. 11-02)

(B) Authority. The Land Use Administrator is authorized to make a determination regarding the existence, expansion or modification of a nonconforming use or noncomplying structure as provided in this section. (Ord. 11-02)

(C) Initiation. A property owner, or the owner’s agent, may request a determination regarding the existence, expansion or modification of a nonconforming use or noncomplying structure affecting the owner’s property as provided in Subsection (D)(1) below. (Ord. 11-02)

(D) Procedure. An application for determination of the existence, expansion or modification of a nonconforming use or noncomplying structure shall be considered and processed as provided in this subsection. (Ord. 11-02)

1. A complete application shall be submitted to the office of the Community Development Department in a form established by the Department along with any fee established by the City's schedule of fees. The application shall include at least the following information:

   (a) The nonconforming use or noncomplying structure in question. (Ord. 11-02)

   (b) A description of the action requested by the applicant.

   (c) Grounds for finding the use is nonconforming or structure is noncomplying or for allowing expansion or modification of the nonconforming use or noncomplying structure. (Ord. 11-02)

2. After the application is determined to be complete, the Land Use Administrator shall approve, approve with conditions or deny the application pursuant to the standards set forth in Subsection (E) below. Any conditions of approval shall be limited to those needed to improve the compliance level of the existing expanded or modified nonconforming use or noncomplying structure to approval standards. (Ord. 11-02)

3. After making a decision, the Land Use Administrator shall give the applicant written notice of the decision.

4. A record of all nonconforming use determinations shall be maintained in the office of the Land Use Administrator.

(E) Standards for Decision. A determination regarding the existence, expansion or modification of a nonconforming use or noncomplying structure shall be based on applicable provisions of Chapter 5 of this Title. (Ord. 11-02)

(F) Appeal of Decision. Any person adversely affected by a decision of the Land Use Administrator regarding a nonconforming use or noncomplying structure may appeal such decision as provided in Section 10-4-140 of this Chapter. (Ord. 11-02)

(G) Effect of Decision. An applicant may continue, expand or modify a nonconforming use or noncomplying structure as determined by the Land Use Administrator. (Ord. 11-02)

10-4-120: APPEAL OF ADMINISTRATIVE DECISIONS. (Ord. 08-07)

(A) Purpose. This section sets forth procedures for appealing an administrative decision applying provisions of this title.

(B) Authority. The Board of Adjustment, Planning Commission, or the City Council as designated in these ordinances shall hear and decide appeals from administrative decisions applying the provisions of this title as provided in this section. (Ord. 11-02)

(C) Initiation. Any person adversely affected by a decision administering or interpreting a provision of this title may appeal to the Board of Adjustment or City Council, as applicable. A complete application for an appeal shall be filed within fifteen (15) days of the decision. (Ord. 11-02)

(D) Procedure. An appeal of an administrative decision shall be considered and processed as provided in this subsection.

1. A complete Notice of Appeal shall be submitted to the office of the Community Development Department on a form established by the Department along with the fee established by the City in it's Consolidated Fee Schedule. The Notice of Appeal shall include at least the following information:

   (a) the decision appealed;

   (b) grounds for the appeal; and

   (c) a description of the action claimed by the applicant to be incorrect.

2. After the Notice of Appeal is determined to be complete, the City shall schedule a hearing before the appropriate body. Notice of the hearing, whether before the Board of Adjustment or the City Council, shall be given as provided in Sections 10-4-040 of this title. Prior to the hearing the Community Development Department shall transmit to the appellate body all papers constituting the record of the appealed action. (Ord. 11-02)

3. An appeal to the Board of Adjustment, Planning Commission, or City Council shall not stay proceedings taken in furtherance of the action appealed unless such proceedings are specifically stayed by order of the Land Use Administrator. An appellant may request a stay by submitting to the Land Use Administrator, in writing, a request for a stay setting forth the reasons why a stay is necessary to protect against imminent harm. In determining whether or not to grant a stay, the Land Use Administrator shall assure that all potentially affected parties are given the opportunity to comment on the request. A ruling on the request for a stay shall be given within five (5) days from the submittal date to the Land Use Administrator. The Land Use Administrator, in granting a stay, may impose additional conditions to mitigate any potential harm caused by the stay, including requiring the appellant to post a bond. Within ten (10) days of the Land Use Administrator's decision regarding the grant or denial of a stay, any aggrieved party may appeal the decision to the appellate body with jurisdiction over the appeal, whose decision will be final. (Ord. 11-02)

4. The appellate body shall conduct a hearing based upon the record only, taking no new testimony or new information but relying solely upon the information and final decision of the officer or body from whom the appeal was taken. The appellate body shall thereafter affirm or reverse, wholly or in part, the lower decision, modify that decision, or impose any conditions needed to conform the matter appealed to applicable approval standards. If the prior decision is supported by substantial evidence, the appellate body shall affirm that decision. The appellate body shall have all the powers of the officer or body from whom the appeal was taken and may issue or direct the issuance of a permit.

5. A record of all appeals shall be maintained in the office of the Community Development Department.

10-4-130: APPEAL OF EXACTIONS (CONSTITUTIONAL TAKINGS). (Ord. 11-02)

Any owner of private-real property, who claims such property was subject to a constitutional taking, may appeal any final decision, applicable to the property, made by the City. The following procedures shall apply to such appeals:

(A) The appellant shall obtain a final determination by authorized City personnel concerning the decision for the requested review.

(B) Within thirty (30) days from the date of the final decision for the requested review, the appellant shall file the appeal in writing in the office of the City Recorder. A copy of the appeal shall be filed with the City Attorney.

(C) The City Council, or its designee, shall immediately set a time to review the decision that gave rise to the appeal.

(D) The appellant shall submit the following information with the appeal:

1. Name and business address of the current owner(s) of the property, form of ownership, and, if owned by a corporation, partnership, or joint venture, the name and address of all shareholders or partners holding a ten (10) percent or greater interest in the entity.

2. Detailed statement of the grounds for the appeal.

3. Detailed description of the property alleged to have been taken.

4. Evidence and documentation of property value of the property alleged to have been taken, including date and cost at time of property acquisition, evidence of the value of property before and after the alleged constitutional taking, name of the party from whom purchased, and relationship, if any, between the person requesting the review and the party from whom the property was acquired.

5. Nature of the protectable interest claimed to be affected, such as, but not limited to, fee simple ownership, leasehold interest, etc.

6. Terms (including sale price) or any previous purchase or sale of a full or partial interest in the property in the three (3) years prior to the date of request for review.

7. All appraisals of the property prepared for any purpose, including financing, offering for sale, or ad valorem taxation, within the three (3) years prior to the date of application.

8. Assessed value of and ad valorem taxes on the property for the previous three (3) years.

9. All information concerning current mortgages or other loans secured for the property, including the name of the mortgagee or lender, current interest rate, remaining loan balance, and term of the loan and other significant provisions, including but not limited to, right of purchasers to assume the loan.

10. All listings of the property for sale or rent, prices asked and offers received, if any, within the previous three (3) years.

11. All studies commissioned by the appellant within the previous three (3) years concerning feasibility of development or utilization of the property.

12. For income-producing property, itemized income and expense statements from the property for the previous three (3) years.

13. Information from a title policy or other similar source showing all recorded liens or encumbrances affecting the property.

14. Any other requested information by City Council or designee deemed reasonably necessary to determine whether there has been a constitutional taking.

(E) The City Recorder shall not deem an application "complete" or "submitted" until the reviewing body or official certifies to the appellant that they received all materials and information required above.

(F) The City Council or designee shall hear all evidence related to and submitted by the appellant, City, or any other interested party to determine whether or not the City's action may be a constitutional taking as defined in this Title. In making such determination, the City Council or designee shall consider whether:

1. The City had a legitimate governmental interest to support its action;

2. The City would have been able to accomplish the same result through the use of a less intrusive action;

3. The property owner was denied all economically viable use of the property;

4. The action forced the property owner to allow a nonowner to enter the property;

5. The appealed decision had an essential nexus to the legitimate governmental interest;

6. The action taken was roughly proportional, both in nature and extent, to the impact caused by the activities that were the subject of the appealed decision

7. The City made an attempt to quantify its findings

(G) The City Council or designee shall render a final-written decision on the appeal within fourteen (14) days after the City Recorder receives all required information. A copy of the decision shall be given to the applicant and officer, employee, Board, Commission, or Council that rendered the final decision that gave rise to the appeal.

(H) If the City Council or designee fails to hear and decide the appeal within fourteen (14) days, the appeal shall be presumed approved.

(I) Private Property Ombudsman. A private property owner may request the Utah State private-property ombudsman to mediate or conduct or arrange arbitration for disputes between private property owners and Syracuse City as provided in Section 63-34-13(g) of the Utah Code or any applicable successor law.

10-4-140: LAND USE DECISIONS AND APPEAL PROCESS. This Chapter shall not nullify the more restrictive provisions of covenants, agreements, other ordinances, or laws but shall prevail over provisions that are less restrictive. The City shall not impose, on a holder of an approved land-use permit, a requirement not expressed in the applicable land-use permit, documents on which the City based its approval of the land-use permit, or any of the City's adopted ordinances. The City is bound by the terms and standards of its Land Use Ordinances and shall comply with mandatory provisions of same. Table 1 of this Chapter reflects the proper procedures governing land use decisions and appeals. Land use applicants shall have fifteen (15) days to appeal any decision to the appropriate Appellate Body. If the applicant desires to continue the appeal beyond the decision of the Appellate Body, they must file such appeal with the District Court within thirty (30) days from the date on which the Appellate Body rendered its decision. (Ord. 08-07) (Ord. 11-02) (Ord. 12-13)

DECISION TO BE MADE	ADVISORY BODY	LAND USE AUTHORITY	APPELLATE BODY	EXTERNAL APPEAL
Adoption of or Amendments to General Plan	Planning Commission (public hearing and notice required)	City Council (public hearing optional)	District Court (appeal within thirty (30) days of decision)	
Adoption of or Amendments to Land Use Ordinance	Planning Commission (public hearing required)	City Council (public hearing optional)	District Court (appeal within thirty (30) days of decision)	
Annexation Application	Planning Commission (with recommendation of zoning designation)	City Council (public hearing and notice required)	(If petition or Ordinance is denied, process ends)	(If petition or Ordinance is denied, process ends)
Appeal of Administrative Decisions	None	Land Use Administrator	City Council or Board of Adjustment (appeal within fifteen [15] days of decision)	District Court (appeal within thirty [30] days from decision by Appellate Body)
Site Plan	None	Planning Commission (Public hearing and notice required)	City Council appeal within thirty (30) days of decision	Civil or District Court appeal within thirty (30) days of decision
Conditional Use Permits	None	Planning Commission or Land Use Administrator	Planning Commission or City Council (fifteen [15] days from decision by Land Use Authority)	Civil or District Court (thirty [30] days from decision by Appellate Body)
Non-Conforming Uses and Non-Complying Structures	None	Land Use Administrator	City Council (fifteen [15] days from decision by Land Use Authority)	District Court (thirty [30] days from decision by Appellate Body)
Minor Home Occupations (See Chapter 7)	None	Land Use Administrator	Planning Commission	City Council
Major Home Occupations (See Chapter 7)	Land Use Administrator	Planning Commission	City Council	District Court
Subdivision Applications and Plat Approvals	Planning Commission (public hearing required at review of sketch plan)	City Council	District Court	Thirty [30] days from decision by Land Use Authority
Vacations or amendments of Subdivision Plats	None	Planning Commission (public hearing and fifteen [15]-day notice required)	City Council	District Court (thirty [30] days from decision by Land Use Authority)
Zoning Variances	None	Board of Adjustment	District Court	Thirty (30) days from decision by Land Use Authority
Exactions (Constitutional Takings)	City Recorder	Not Applicable	City Council	Utah State private-property ombudsman

Table 1 of Chapter 4 (Ord. 06-17) (Ord. 08-07) (Ord. 10-02) (Ord. 11-02) (Ord. 12-13)

CHAPTER 5

NONCONFORMING LOTS AND USES AND NONCOMPLYING STRUCTURES

10-5-010: Intent

10-5-020: Continuation

10-5-030: Determination of Nonconformance

10-5-040: Nonconforming Lots of Record

10-5-050: Nonconforming Uses of Land

10-5-060: Noncomplying Structures

10-5-070: Nonconforming Uses of Structures

10-5-080: Repairs and Maintenance

10-5-090: Nonconforming Uses or Noncomplying Structures Detrimental to Health and Safety

10-5-100: Extension of Time for Recovery of Investment

10-5-010: INTENT. Within the zones established by this Title, or amendments thereto, building lots, structures, and/or uses of land and structures lawfully existed before the City Council adopted or amended this Title that prohibits, regulates, or restricts said lots, structures, and uses thereon under the terms of this current Title. It is the intent of this Title to permit these nonconformities to continue until such time as they are changed, amended, or abandoned.

This Chapter declares nonconforming uses or noncomplying structures to be incompatible with permitted uses in the zone involved. However, to avoid undue hardship, nothing in this Title shall require a change in the plans, construction, or designated use of any building or land on which actual construction or use lawfully began prior to the effective date of adoption or amendment to this Title and is diligently pursued. This Title defines actual construction as the placement of construction materials in a permanent position and fastening in a permanent manner. Where excavation, demolition, or removal of an existing building substantially began preparatory to rebuilding, this Title shall deem such excavation, demolition, or removal to be actual construction, provided the builders carry on the work diligently. (Ord. 08-07) (Ord. 11-02)

10-5-020: CONTINUATION. A nonconforming use or noncomplying structure, legally existing when it became prohibited, may continue as provided in this Chapter. (Ord. 11-02)

10-5-030: DETERMINATION OF NONCONFORMANCE. Pursuant to the procedures set forth in 10-4-120,the Land Use Authority shall determine all matters regarding noncomplying structures or the nonconforming use of lots, buildings, and land and whether they are noncompliant with respect to current provisions of this Chapter. (Ord. 06-17) (Ord. 08-07) (Ord. 11-02)

10-5-040: NONCONFORMING LOTS OF RECORD. In any zone, notwithstanding other limitations imposed by this Title, builders may erect structures permitted in said zone on any single legal building lot of record that does not conform to lot area or lot width requirements of the zone on the effective date of this Title. A lot of record that does not

meet lot area or lot width requirements must still meet the other requirements of the zone.

Where lots are larger than required by this Title, the land owner may subdivide said lots into smaller lots, unless the division would create a lot smaller in lot width or lot area than required by this Title.(1991) (Ord. 08-07)

10-5-050: NONCONFORMING USES OF LAND. Where, at the time of passage of this Title or amendments thereto, the lawful use of land exists that this Title no longer permits, the use may continue so long as it remains otherwise lawful, provided:

(A) No one enlarges or increases such nonconforming use or extends such use to occupy a greater area of land than was occupied at the effective date of adoption or amendment of this Title. (Ord. 08-07)

(B) No one moves in whole or in part such nonconforming use to any portion of the lot or parcel other than that occupied by such use at the effective date of adoption or amendment of this Title. (Ord. 08-07)

(C) Any such nonconforming use of land does not cease for any reason for a period of more than one (1) year; otherwise, any subsequent use of such land shall conform to the regulations specified by this Title for the zone in which such land resides. (Ord. 08-07)

(D) No one erects additional nonconforming structures in connection with such nonconforming uses of land. (Ord. 08-07)

10-5-060: NONCOMPLYING STRUCTURES. Where a lawful structure exists at the effective date of adoption or amendment of this Title that could not lawfully be built under the new terms of this Title by reason of restriction on lot area, lot coverage, height, yards, its location on the lot, or other requirements concerning the structure, such structure may continue so long as it remains otherwise lawful, subject to the following provisions: (Ord. 11-02)

(A) No one may alter or enlarge such noncomplying structure in any way which increases its nonconformity, but may alter any noncomplying structure or portion thereof to decrease its nonconformity. (Ord. 08-07) (Ord. 11-02)

(B) Such structure shall thereafter conform to the regulations for the district wherein the structure is located if it moves for any reason for any distance. (1991) (Ord. 08-07)

10-5-070: NONCONFORMING USES OF STRUCTURES. The lawful use of a structure or structures and premises, existing at the effective date of adoption or amendment of this Title, that the new provisions of said Ordinance no longer allow in the zone may continue so long as it remains otherwise lawful providing that:

(A) No one shall enlarge, extend, construct, or structurally alter an existing structure devoted to a nonconforming use without changing the use to a permitted use. (Ord. 08-07)

(B) Any nonconforming use may be extended to any other part of a building designed for such use provided that

1. no structural alteration to the building is made for the purpose of extending the use; and

2. the nonconforming use does not extend in any way to occupy land outside the structure. (Ord. 08-07)

(C) Nonconforming uses of buildings, structures, or premises that change to another nonconforming use must receive approval from the Planning Commission. In determining whether or not to grant approval, the Planning Commission shall determine the proposed use is equally appropriate or more appropriate to the district than the existing nonconforming use.

(D) Any noncomplying structure or nonconforming lot or use of a structure and/or land superseded by a permitted structure or use shall thereafter conform to the regulations of the zone in which it resides, and the noncomplying structure and/or use may not thereafter resume. (Ord. 08-07) (Ord. 11-02)

(E) Whenever a nonconforming use of a structure or premises ceases for one (1) year, no one shall use the structure or premises thereafter except in conformity with the regulations of the zone in which it resides. The term "ceases" as used in this Subsection shall mean that the activity in question has not been in operation for a period of one (1) year. (Ord. 08-07)

(F) Overcoming Presumption of Abandonment. A presumption of abandonment may be rebutted upon evidence presented by the owner showing no intent to abandon the use, structure, or other nonconformity. Such evidence may include proof that, during the alleged period of abandonment, the owner did either of the following: (Ord. 11-02)

2. Maintained the lot and structure, if any, in accordance with the building code; or (Ord. 11-02)

3. Actively and continuously marketed the lot or structure for sale or lease. (Ord. 11-02)

10-5-080: REPAIRS AND MAINTENANCE. The City may prohibit the reconstruction or restoration of a non-complying structure or terminate its nonconforming use if the structure deteriorates to a condition that renders it uninhabitable. The City shall mail written notice of such intent to the property owner granting such owner six (6) months from the date of mailing in which to repair or restore the structure to its original condition. (Ord. 08-07)

10-5-090: NONCONFORMING USES OR NONCOMPLYING STRUCTURES DETRIMENTAL TO HEALTH AND SAFETY. No provisions of this Chapter shall be construed to allow the continuance of any nonconforming use or noncomplying structure when it is detrimental to the health, safety, or welfare of the public. (Ord. 11-02)

10-5-100: EXTENSION OF TIME FOR RECOVERY OF INVESTMENT. The Land Use Administrator may suspend any requirement that a nonconforming use, lot, or parcel or noncomplying structure or other nonconformity come into compliance with the provisions of this Title if the owner of the affected property demonstrates that they have not recovered or amortized the amount of their investment in the nonconforming use, lot, or parcel or noncomplying structure or other non-conformity. (Ord. 11-02)

(A) Written Request for Extension Required. A property owner shall submit a written request to the Land Use Administrator for an extension of time needed to recover their investment in the affected property. (Ord. 11-02)

(B) Information Required. The following information shall accompany the request: (Ord. 11-02)

(1) The amount of the owner's investment in the use, structure, lot, parcel, or other nonconformity from the time it became nonconforming. (Ord. 11-02)

(2) The amount of such investment realized to date and an estimate of the amount to be realized on the date the time limit expires. (Ord. 11-02)

(3) Evidence of any lease or purchase obligations undertaken in reliance on any previously-issued licenses or permits applying to the use, structure, lot, parcel, or other noncomformity, including any contingency clauses therein permitting termination of such lease. (Ord. 11-02)

CHAPTER 6

GENERAL LAND USE REGULATIONS

10-6-010: Effect of Chapter

10-6-020: Regulations for Buildings and Structures

10-6-030: Regulations for the Use of Land

10-6-040: Animals

10-6-050: Lot and Yard Regulations

10-6-060: Miscellaneous Requirements and Provisions

10-6-070: Shade Trees

10-6-080: Buffer Yards

10-6-090: Agriculture Protection Areas

10-6-100: Conditional Uses

10-6-010: EFFECT OF CHAPTER. The regulations hereinafter set forth in this Chapter are in addition to and supplement other regulations of this Title. The Land Use Authority responsible for the enforcement of the provisions outlined in this Chapter shall be the Land Use Administrator or his agent, unless otherwise designated in this Chapter.

(A) Building Lot for Building Required. The erection of every building, except those housing public uses, public utilities, accessory and temporary uses, and those buildings used in conjunction with agriculture, parks and playgrounds, or other uses expressly exempted, shall be erected on a "Building Lot" that shall be designated and continuously maintained for principal buildings and their accessory buildings. Except for dwelling groups as specifically authorized in this Title, not more than one (1) dwelling structure shall occupy any one (1) building lot.

1. Lot and Building Addressing. Each building in the City shall display its identified address as approved by the Community Development Director or his designee. The City shall ensure all buildings post and use the legally-recorded lot and address building numbers to provide effective and timely emergency response. The building or premises shall prominently display the address or lot number during construction. The following standards shall apply in numbering lots and buildings effective upon adoption of this Title: (Ord. 06-17)

(a) Lot and building numbers on the south or east side of a street shall end with an odd number. (Ord. 06-17)

(b) Lot and building numbers on the north or west side of a street shall end with an even number. (Ord. 06-17)

(c) Lot and building numbers will not end with a zero (0). (Ord. 06-17)

(d) Lot and building numbers shall not duplicate those on adjacent parallel streets. (Ord. 06-17)

(e) Properties on which buildings are not readily identifiable from a street or access road may require additional identification as determined by the Community Development Director or his designee. (Ord. 06-17)

(f) Residential building numbers shall be at least five (5) inch tall block letters. All building numbers shall be of sufficient size so as to be legible from the street or private road. (Ord. 06-17)

(g) Building numbers shall be of durable materials the colors of which contrast with the background material. (Ord. 06-17)

(h) Building numbers shall be mounted in a secure and permanent manner. (Ord. 06-17)

(i) Single-family and two- (2) family building numbers shall be placed on a prominent portion of the front building facade a minimum of seven (7) feet above the finished elevation of the ground at the front building line. (Ord. 06-17)

(j) Multi-family, commercial, office, industrial, or institutional building numbers shall be placed in a prominent location at the main entrance of such buildings. (Ord. 06-17)

(k) Identification of interior suites, apartments, units, or offices shall each be clear and in a logical numerical or alphabetical sequence. (Ord. 06-17)

2. Street Signs. Street signs shall be installed at all intersections of public and/or private streets at locations specified by the City Community Development Director or his designee according to approved City standards and designs. Developers shall install all required street signs in new developments at developer's expense; however, the City, developer, or owner may install street signs as determined by the City. (Ord. 06-17)

(B) Lot Coverage of Accessory Buildings, Structures, Parking Spaces. No accessory building, structure, or group of buildings or structures, excluding swimming pools, and no parking space in any residential zone shall cover more than twenty-five (25) percent of the rear yard space.

(C) Accessory Buildings and Structures.

1. General Requirements. No accessory building or structure shall be erected, located, used, or occupied until the erection of the principal use has commenced. No more than two (2) accessory buildings shall be on any lot, unless it contains a minimum of half an acre. Lots with half an acre or more may qualify for approval of a third accessory building by complying with all other applicable requirements of this Chapter. No accessory building may be located within a recorded easement unless authorized by the Land Use Authority. All accessory buildings located in the street sides of corner lots shall comply with Section 10-6-050 regarding lot and yard regulations for corner lots. No accessory building or structure may encroach into a front or side yard unless the structure is: (Ord. 06-17) (Ord. 08-07) (Ord. 09-10) (Ord. 09-16) (Ord. 11-02)

(a) not larger than two hundred (200) square feet, which includes any awnings, carports, or other attached features to the accessory structure, and; (Ord. 08-07)

(b) not taller than ten (10) feet, and; (Ord. 08-07)

(c) concealed or otherwise located behind a privacy fence of at least six (6) feet in height, and; (Ord. 08-07)

(d) located at least ten (10) feet from the primary structure and located at least three (3) feet from any property lines. (Ord. 08-11) (Ord. 09-10)

2. Accessory buildings or structures two hundred (200) square feet or greater. (Ord. 10-02)

(a) Building Permit Required. Accessory buildings of two hundred (200) square feet or greater shall require approval for a minor conditional use permit and issuance of a building permit. Such accessory building or structure shall conform to requirements of Section 10-6-010(C)1 and shall not be greater in size than the footprint of the principal structure. (Ord. 08-07) (Ord. 11-02)

(b) Approval. Persons desiring to construct accessory buildings shall make application to the Land Use Authority or designee for Conditional Use approval as outlined in Section 10-6-100. Application shall include the following submittals: (Ord. 10-02)

i. Site plan showing location of the home, property line setbacks, location of the proposed building, parking spaces, easements, and buildings on adjacent properties within fifty (50) feet of the proposed accessory building. (Ord. 10-02)

ii. Elevation drawings showing the roof structure, type of material and design finish of the building, and building structure measurements.

(c) Design. The design, height, and footprint of accessory buildings shall blend aesthetically with the principle building's architecture and design materials. (Ord. 03-18) (Ord. 08-07)

3. Setback Requirements. Shown in Exhibit 10-6-010.a and listed below are the following setback requirements developed to regulate the negative impact accessory structures can have within a development: (Ord. 10-02)

(a) Minimum Setback. In no case shall an accessory building, regardless of size, be any closer than three (3) feet to any property line. (Ord. 04-04) (Ord. 10-02)

(b) Walls. Accessory buildings two hundred (200) square feet or greater that exceeding ten (10) feet in height, as measured from the main floor to the top exterior wall plate, shall increase the three (3) foot minimum setback requirement from property line by one (1) foot for every one (1) foot of height above ten (10) feet. (Ord. 04-04) (Ord. 09-10). (Ord. 10-02)

(c) Roof. The roof height on an accessory structure that exceeds fifty (50) percent of the wall height, as measured from the top

exterior wall plate to the highest point on the roof, shall increase the three (3) foot minimum setback requirement from property line by one (1) foot for every one (1) foot above the fifty percent requirement.(Ord. 04-04) (Ord. 09-10) (Ord. 10-02)

(d) Corner Lot. An accessory building located on the street side of a corner lot shall comply with section 10-6-050. (Ord. 08-11)

(e) Other Structures. In no case shall an accessory building be constructed within six (6) feet of a primary structure or within six (6) feet of any structure two hundred (200) square feet or greater. (Ord. 10-02) (Ord. 11-02)

Exhibit 10-6-010.a

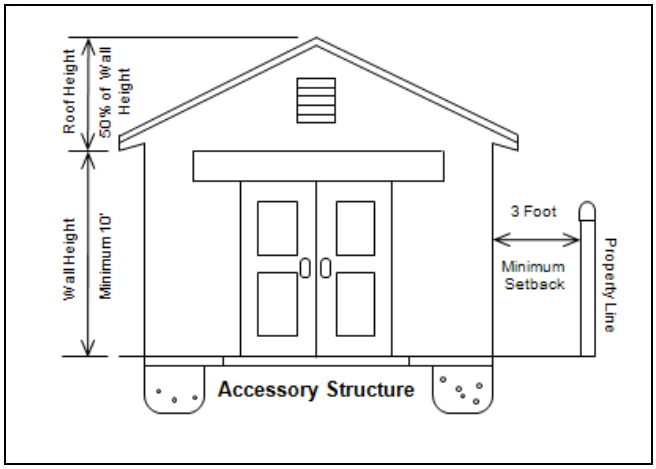

(Ord. 10-02)

(D) Maximum Height Limitations. No maximum height regulations, as stated in this Title except for specified exceptions, shall apply to prevent the construction of penthouse or roof structures for the housing of elevators, stairways, tanks, ventilating fans, or similar equipment required to operate and maintain the buildings, and fire or parapet walls, skylights, towers, steeples, flagpoles, chimneys, smoke stacks, water tanks, television masts, silos, or similar structures above the stated height limits, provided that no space above the height limit shall provide additional floor space.

(E) Additional Height Allowed. Public buildings or structures and churches authorized in a zone may be erected to any height provided the building is set back from each otherwise established setback line at least one (1) foot for each additional foot of building height above the normal height limit required for the zone in which the building is erected.

(F) Satellite Dish Antennas. For the purpose of this Title, satellite dishes may be located on any residential structure or in the rear yard as accessory structures. (Ord. 03-08)

(G) Swimming Pools. Any structure intended for swimming, recreational bathing, or wading that is over twenty-four (24) inches deep shall require a building permit. The provisions of the adopted International Residential Building Code appendix (G), adopted by the City Council, shall govern the design and construction of swimming pools, spas, and hot tubs installed in or on the lot of a one- (1) or two-(2)family dwelling. All such pools in any residential zone shall be accessory

uses and comply with the following conditions and requirements: (Ord. 06-17) (Ord. 08-07)

1. It shall not be located closer than eight (8) feet to any property line.

2. The swimming pool shall be walled or fenced to at least six (6) feet in height to prevent uncontrolled access by children from adjacent properties.

10-6-020: REGULATIONS FOR BUILDINGS AND STRUCTURES. Buildings or structures, where allowed, shall comply with the following regulations specific to each type of structure:

(A) Regulations for All Residential Structures.

1. All residential structures shall be permanently affixed to the applicable property site and held in common ownership and classification and taxed as real estate. (Ord. 11-04)

2. Each residential structure shall have a permanent connection to all available utilities.

3. Any and all appendages or accessory uses, such as steps, carports, garages, storage buildings, decks, and awnings or additions and alterations, shall comply with the adopted edition of the International Residential Code. (Ord. 08-07)

4. Reasonable Accommodation. None of the requirements of this Section shall limit any reasonable accommodation necessary to allow the establishment or occupancy of a residence for anyone with a disability as protected under the Fair Housing Amendments Act of 1988. (Ord. 10-02)

(B) Regulations for New Residential Construction must meet one (1) of these two (2) options. (Ord. 11-04)

Option 1. All single-family dwellings, duplexes, and detached and attached town homes shall have the front exterior walls constructed with a minimum seventy-five (75) percent of brick, rock, or stone. On corner lots, the street side of the structure shall have fifty (50) percent, or up to a maximum height of four (4) vertical-feet of wainscot, composed of brick, rock, or stone. These coverage requirements shall be calculated by first determining square footage of the total wall areas, based on measurements of the front and side elevations of the structure from foundation to top-plate line of the uppermost level, excluding openings for windows and doors, and multiplying that square footage by the applicable percentage. Homebuilders may only include brick, rock, or stone in these percentage requirements if clearly shown on the City-approved, stamped set of front and side elevations. Hidden areas, such as front porches, shall not qualify towards the percentage requirements; however, City staff may credit gables with brick, rock, or stone towards the percentage requirements. The installation of aluminum or vinyl siding shall be allowed on the rear of homes. (Ord. 11-04)

Option 2. All single-family dwellings, duplexes, and detached and attached town homes shall have the front exterior walls constructed with a minimum thirty (30) percent brick, rock, or stone and the remainder covered in a hardie board or hardie plank. On corner lots,

the street side of the structure shall have fifty (50) percent, or up to a maximum height of four (4) vertical-feet of wainscot, composed of brick, rock, or stone. These coverage requirements shall be calculated by first determining square footage of the total wall areas, based on measurements of the front and side elevations of the structure from foundation to top-plate line of the uppermost level, excluding openings for windows and doors, and multiplying that square footage by the applicable percentage. Homebuilders may only include brick, rock, or stone in these percentage requirements if clearly shown on the City-approved, stamped set of front and side elevations. Hidden areas, such as front porches, shall not qualify towards the percentage requirements; however, City staff may credit gables with brick, rock, or stone towards the percentage requirements. The installation of aluminum or vinyl siding shall only be allowed on the rear of homes. (Ord. 11-04)

1**.** The requirement for brick, rock, or stone constructed on front and side exterior walls shall apply to any single family dwelling, duplex, or single family detached or attached town home planned as part of a development for which the City approved a preliminary plat after August 12, 2003. (Ord. 11-04)

2**.** Every residential dwelling shall have a minimum fully enclosed two- (2) car garage (attached or detached) having a minimum outside width of twenty (20) feet (as measured from outsides of foundation) and having at least four hundred (400) square feet in total floor area. The Building Department shall not issue a building permit for construction of residential structure(s) unless plans for such structure(s) include the garage described in this Subsection.

(C) Regulations for Manufactured Housing.

1**.** The U.S. Department of Housing and Urban Development inspectors shall certify all manufactured homes as meeting the National Manufactured Housing Construction and Safety Standards Act of 1974, effective June 15, 1976 (HUD Code), and any subsequent amendments thereto.

2. Each manufactured home, with or without basement, shall be located on a site-built permanent foundation system that meets or exceeds applicable requirements of the building codes as detailed in the "Guidelines for Manufactured Housing Installations." Permanent masonry or concrete perimeter enclosures shall be required and shall conform to the adopted edition of the International Residential Code as specified for foundation walls. (Ord. 03-08) (Ord. 08-07)

3. The manufactured home, when fully installed, shall have the appearance of a site**-**built single-family dwelling and meet the requirements of Section 10-6-020(A) and (B). (Ord. 03-08) (Ord. 08-07)

4**.** Homeowners shall ensure the removal of all towing hitches and running gear, which include tongues, axles, brakes, wheels, lights, and other parts of the chassis intended only for transport.

10-6-030: REGULATIONS FOR THE USE OF LAND. This Title allows the following uses as permitted or conditional, provided the applicants meet and comply with the regulations established herein for each specific use and provided they obtain site plan approval from the City Council~~,~~ who shall act as the Land Use Authority for this Section. (Ord. 06-17)

(A) Dwelling Groups. The Land Use Administrator shall not issue a building permit for the erection of any dwelling group unless that dwelling group conforms to all the following conditions and requirements and receives a recommendation of approval by the Planning Commission:

1. The area of the lot, on which the dwelling group is to be located, shall be at least equal to the aggregate of the lot areas otherwise required for the individual dwellings in the group.

2. No building in a dwelling group shall be closer to any lot line than the front, side, or rear yard distances otherwise required in the zone in which the building will be located. When the buildings in a dwelling group are arranged in a row, side by side, the distance between buildings shall not be less than two (2) times the side yard requirement of the zone. When the buildings in a dwelling group face a side lot line, the side yard between the front of the building and said lot line shall not be less than the front yard requirement for the zone. When the buildings in a dwelling group are arranged in a row, front to back, the distance between buildings shall not be less than two (2) times the front yard requirement of the zone. (Ord 05-12)

3. Every dwelling in the dwelling group shall have an entrance within sixty (60) feet of an access roadway, drive, or parking lot and within two hundred (200) feet, measured along the route of vehicular access, of a public street.

4. Except as modified in this Section, such dwelling group shall conform to all requirements of this Title for the zone in which it is to locate.

5. The width of the lot on which the dwelling group is to be erected shall be at least eighty (80) feet. The width of the roadway or drive shall be at least twenty (20) feet. The erection of a dwelling group shall be a planned development from the beginning, clear of existing buildings, except an existing building may be included within the group upon recommendation of the Planning Commission.

(B) Multi-Family Dwellings. The Building Department shall not issue a building permit for the erection of any multi-family dwelling unless it conforms to all the following conditions and requirements and receives a recommendation of approval by the Planning Commission:

1. All multiple-family dwellings shall conform to the requirements of Section 10-6-020(B)1 and 2. (Ord. 08-07)

2. Buildings in multiple-family dwelling developments shall have a minimum fifteen- (15) foot separation for single-story buildings, twenty- (20) foot separation for two- (2) story buildings, and twenty-five- (25) foot separation for two and five tenths (2.5) stories and above buildings. Multiple-family dwellings shall be located no closer than fifty (50) feet from any single-family or two- (2) family dwelling.

3. The approved site plan shall identify all trash dumpsters, utility fixtures, power transformers, and other appurtenances which shall-have screens with masonry fencing, solid iron metal gates, and landscaping.

4. Street, building, and parking illuminations within multi-family developments shall meet the following requirements. The preliminary plat or site plan review phase of the development process shall include

the designation, spacing, and arrangement of all exterior lighting structures. The developer shall submit to the Planning Commission sufficient information, in the form of an overall exterior lighting plan, to enable the Planning Commission to determine compliance with all applicable provisions of this Title. The exterior lighting plan shall include: (Ord. 08-07)

(a) The standards for insuring that site lighting projections shall not bleed onto adjacent residential properties.

(b) Site lighting that minimizes light spill into the dark night sky.

(c) Where practical, exterior lighting installations, which include timers, dimmers, sensors, or photocell controllers, that turn the lights off during daylight hours, or hours when lighting is unnecessary, to reduce overall energy consumption and eliminate excessive lighting.

(d) Fixtures and lighting systems, used for safety and security, which shall be in good working order and maintained in a manner that serves the original design intent of the system.

(e) Vegetation and landscaping maintained in a manner that does not obstruct security lighting and minimizes possible entrapment spaces. Landscaping information shall indicate mature tree size, shrubbery, and other vegetation in order to evaluate the long-term and seasonal effectiveness of lighting or screening of lighting.

(f) The proposed location, mounting height, and aiming point of all exterior lighting fixtures.

(g) Building elevations as the principal areas of illumination, and drawings of all relevant building elevations showing the fixtures, portions of the elevations or areas intended for illumination, luminance levels of the elevations, and the aiming point for any light fixture.

(C) Residential Facility for Persons with a Disability. A group home facility licensed by the State of Utah and designed as a single-family residential dwelling unit occupied on a twenty-four (24) hour per day basis by residents requiring protected living arrangements and/or assistance with daily living activities. Such group home facilities for persons with a disability are a permitted use within residential zones and some commercial zones. The applicant(s) for group home facilities shall submit site plans that comply with the regulations established herein for each specific use and obtain a recommendation for approval from the Planning Commission as well as site plan approval from the City Council. The City shall not deny a group home facility where it meets all requirements set forth herein. (Ord. 08-07)

As used herein, “disability” means a physical or mental impairment that substantially limits one or more of a person’s major life activities, including a person having a record of such impairment or being regarded as having such impairment. “Disability” does not include current illegal use of, or addiction to, any federally-controlled substance as defined in Section 102 of the Controlled Substances Act, 21 U.S.C. § 802.

All facilities shall be in conformance to the International Building Code for an R-4 occupant group, including any amendments the International Fire Code may outline. (Ord. 08-07)

1. Site Plan Review.

   (a) In residential zones, the facility shall meet all municipal building, safety, zoning, and health ordinances applicable to similar residential dwellings. The facility shall be capable for use as a group residential facility without structural or landscaping alterations that would change the structure's residential character. To protect the general appearance, character, or safety of the residential area or neighborhood, no one shall add to or enlarge the group home facility in any manner without prior approval of the City. (Ord. 06-17) (Ord. 08-07)

   (c) A facility shall comply with the parking requirements set forth in Chapter 8. Facility management shall prohibit parking in the minimum front, side, or rear landscaped-setback areas. (Ord. 08-07)

2. Compliance and Licensure.

   (a) The applicant shall obtain and maintain all licenses from the State of Utah to operate a group home facility and provide the City with proof of such license(s) prior to site plan approval of the facility. The applicant must verify compliance with all applicable requirements, regulations, and standards of the State of Utah Department of Health.

   (b) The use granted and permitted to the resident homeowner by this Title is nontransferable and terminates if the structure converts to a use other than a group home facility or if the structure fails to comply with applicable health, safety, or adopted building codes.

3. Reasonable Accommodation. None of the requirements of this Section shall limit any reasonable accommodation necessary to allow the establishment or occupancy of a residential facility for persons with a disability.

4. Separate Requirement Standards for an Assisted Living Facility or Similar Elderly Residential Facilities. (Ord. 08-07)

   (a) Persons receiving treatment for alcoholism or drug abuse shall not reside in such facility. No person with a history of violent behavior or felony arrest history shall reside in such facility.

   (b) Placement in an assisted living facility or elderly residential facility shall be on a strictly voluntary basis and not part of, or in lieu of, confinement, rehabilitation, or treatment in a correctional or mental institution.

   (c) This Title prohibits discrimination against elderly persons and against assisted living facilities for elderly persons. The City Council shall base all decisions regarding applications for assisted living facilities or for elderly residential facilities on the

site plan approval criteria set forth in this Title. (Ord. 06-17) (Ord. 08-07)

(d) Elderly residential facilities shall acquire site plan approval if the facility meets the requirements of existing land use ordinances that allow a specified number of unrelated persons to live together {See Section 10-2-040(DD)}. Group facilities exceeding such specified number of unrelated persons shall require site plan approval by the City Council. (Ord. 06-17) (Ord. 08-07)

(e) The facility operator shall provide the City proof of adequate insurance for the program vehicles, hazard insurance on the home, and liability insurance to cover residents.

10-6-040: ANIMALS.

(A) Animal Clinics. Such facilities shall require sound-proof walls, if a part of a larger commercial building, and receive site plan approval. Clinics utilizing single-tenant buildings shall locate no closer than one hundred (100) feet from any residential dwelling unless it also incorporates sound-proof walls. (Ord. 11-02)

(B) Animal Hospitals. Such facilities shall receive site plan approval and locate no closer than two hundred (200) feet from any residential dwelling. (Ord. 11-02)

1. Animals taken outside the building to the exercise runs shall have continuous supervision by an employee of the facility. (Ord. 11-02)

2. Hospitals shall be no closer than two hundred (200) feet to any adjacent primary structure, constructed with sound-proof walls, and comply with Table D for Buffer Yards. (Ord. 11-02)

3. The lot-size requirement for such facilities shall be no less than one (1) acre. (Ord. 11-02)

4. The property shall provide one-half (1/2) a parking space for each animal housed at the facility. (Ord. 11-02)

5. Site plan shall include means for controlling dust, odor, and insects for the outdoor exercise runs, location of all existing and proposed structures, utilities, and landscaping. (Ord. 11-02)

(C) Farm Animal Keeping.

1. Definitions:

ADEQUATE FENCING. At a minimum, mesh, barbed wire, chain link, rail, or post fencing or metal-fence panels. (Ord. 06-17)

FARM ANIMAL KEEPING. The keeping of animals or fowl, such as commonly used for food or fiber production or as a beast of burden, for recreational pleasure. (Ord. 06-17)(Ord. 12-03)

FARM INDUSTRY. Generally all phases of farm operation including, but not necessarily limited to, the keeping and raising of farm animals and/or fowl for domestic or commercial use, e.g. fur farms, livestock feed yards, pig farms, dairy farms, and similar uses as well as any accessory uses thereto, except commercial slaughter. (Ord. 06-17)(Ord. 12-03)

LIVESTOCK. Domesticated cattle, sheep, goats, turkeys, swine, equines, camelidae, ratites, bison, elk, or any domesticated nonhuman vertebrate creature, domestic furbearer, or domestic poultry, raised, kept, or used for agricultural purposes. (Ord. 06-17)(Ord. 12-03)

2. Farm Animal Keeping. In residential and agricultural zones where permitted, farm animals and fowl may be kept for family use outside the dwelling. All animal keeping guidelines shall be in accordance with the provisions as outlined in this Section of the Title. All farm animals and fowl shall be kept within the subject property unless under direct supervision and control of the property owner or designee. The number of animals or fowl permitted shall be governed by the following schedule except that dependent young may be kept in addition to these numbers: (Ord. 12-03)

   (a) A-1 Agriculture and R-1 Residential Zones with Lots Containing a Minimum of 21,780 Square Feet. In zones where farm animal keeping is a permitted use, each lot containing a minimum of twenty-one thousand seven hundred eighty (21,780) square feet shall have an allocation of forty (40) points with an additional accrual of one (1) point for each one thousand eighty nine (1,089) square feet thereafter.

   [Example, using schedule below: A lot size of twenty-one thousand seven hundred eighty (21,780) square feet, would have an allocation of forty (40) points which would allow one (1) horse for twenty (20) points and two (2) goats for ten (10) points each or two (2) horses for twenty (20) points each.]

   With lots containing twenty-one thousand seven hundred eighty (21,780) square feet, farm animals may be kept provided that all pens, barns, coops, stables, corrals, and other similar enclosing structures to keep animals or fowl shall be not less than fifty (50) feet from dwellings on adjacent lots, not less than twenty (20) feet from a dwelling on the same lot, and not less than one hundred fifty (150) feet from a public street, except on corner lots where such structures shall be not less than fifty (50) feet from a public street. (Ord. 12-03)

   (b) A-1 Agriculture and R-1 Residential Zones with Lots Containing a Minimum of 10,890 Square Feet. In zones where farm animal keeping is a permitted use, each lot containing a minimum of ten thousand eight hundred ninety (10,890) square feet shall have an allocation of twelve (12) points with an additional accrual of one (1) point for each one thousand three hundred sixty one (1,361) square feet thereafter.

   [Example, using schedule below: A lot size of ten thousand eight hundred ninety (10,890) square feet, would have an allocation of twelve (12) points which would allow one (1) goat for ten (10) points and one (1) rabbit for two (2) points or two (2) turkeys for five (5) points each and a pigeon for two (2) points.]

   With lots containing a minimum of ten thousand eight hundred ninety(10,890) square feet with and less than twenty-one thousand seven hundred eighty (21,780) square feet, farm animals may be kept provided that all pens, barns, coops, stables, corrals, and other similar enclosing structures to keep

animals or fowl shall be not less than twenty five (25) feet from dwellings on adjacent lots, not less than ten (10) feet from a dwelling on the same lot, and not less than seventy five (75) feet from a public street, except on corner lots where such structures shall be not less than twenty five (25) feet from a public street. (Ord. 12-03)

(c) To determine the square footage of a lot, use the following conversion:
Square footage = 43,560 x (lot size in acreage)
Example: 1/4 (0.25) acre lot
43,560 x (0.25) = 10,890 square feet
(Ord. 12-03)

(d) Farm animals shall have points assigned to-them based on the following groups:

i.	Large animals such as horses, llamas, emus, ostriches or cows (Ord. 06-17)(Ord. 12-03)	Twenty (20) points each
ii.	Medium animals such as sheep or goats (Ord. 08-07)(Ord. 12-03)	Ten (10) points each
iii.	Large fowl such as turkey or geese (Ord. 08-07)	Five (5) points each
iv.	Small fowl such as pheasant, pigeons, ducks or hens (Ord. 12-03)	Two (2) points each
v.	Small animals such as rabbits or pygmy goats (Ord. 12-02)	Two (2) points each
vi.	Pigs (provided their pens are at least two hundred (200) feet from neighboring dwellings)	One Hundred (100) points each

Exception 1: This provision shall not apply to certified breeds of potbellied pigs with the North American Potbellied Pig Association. (1998) (Ord. 06-17)

Exception 2: In zones where farm animal keeping is a permitted use, the point total shall not include the counting of the first six (6) hens or six (6) rabbits, or a combination of both not exceeding six (6). (Ord. 12-03)

(e) Animal owners shall contain animal waste runoff water from paddocks or stables so as not to contaminate residential water resources, public rights of way, or adjacent properties. (Ord. 06-17)

(f) In residential and agriculture zones, harvesting of livestock and non-commercial slaughter shall be conducted within the rear yard of the lot or in an enclosed building in an area not visible from the street or neighboring properties and shall be done in accordance with accepted animal husbandry practices or customary farming practices.

Syracuse City refers to State Code for additional laws regulating animal cruelty. See Title 6 of this Ordinance for reference to Davis County Animal Control Ordinance. (Ord. 12-03)

(D) Dog Kennel Regulations. Parcels or lots with three (3) or more dogs four (4) months old or older are considered kennels and shall require a conditional use permit. The Land Use Authority shall review each request separately on its own merits and may revoke a conditional use permit as set forth in 10-3-080. In no case shall a residential kennel permit be for more than four (4) dogs. (Ord. 08-07) (Ord. 11-02)(Ord. 12-03)

1. Owners of kennels shall obtain licensing for each dog from Davis County Animal Control and comply with all adopted animal-control regulations not addressed in this Title. (Ord. 11-02)(Ord. 12-03)

4. All pens, runs, shelters, or similar structures housing dogs for residential kennels shall be no less than one hundred (100) feet from neighboring or abutting dwellings. (Ord. 11-02)(Ord. 12-03)

5. In order to qualify for a residential kennel, the dogs' owner(s) shall acquire approval for a minor conditional use permit. (Ord. 08-07) (Ord. 11-02)(Ord. 12-03)

6. All pens, runs, shelters, or similar structures housing dogs for commercial kennels shall be no less than two hundred (200) feet from a public street and at least two hundred (200) feet from all neighboring or abutting dwellings, and the owner of the parcel or lot shall acquire approval for a major conditional use permit. (Ord. 11-02)(Ord. 12-03)

7. Commercial kennels shall be located on a minimum of five (5) acres and must receive a minor conditional use permit. (Ord. 11-02)(Ord. 12-03)

(E) Household Pets. Property owners may keep dogs, cats, small animals and fowl as household pets in residential zones subject to the following conditions: (Ord. 06-17)(Ord. 12-03)

1. Dogs, small animals, and fowl shall be kept in pens, or otherwise secured, unless housed within the dwelling unit. Cats are excluded. (Ord. 12-03)

2. In no case shall there be more than two (2) dogs kept, unless a kennel permit is acquired, and no more than four (4) cats kept as household pets. (Ord. 12-03)

3. All pens, coops, and structures shall be kept clean and free from objectionable odor and waste. (Ord. 08-07)

4. Dogs, cats, small animals and fowl allowed shall be those species normally stocked and available at a State licensed pet store. (1999)(Ord. 12-03)

5. Dogs require registering and licensing with Davis County according to County ordinance. Cats do not require registering and licensing. (Ord. 12-03)

6. Service animals (any guide dog, signal dog, or other animal individually trained to provide assistance to an individual with a disability) are

considered exempt from the number of animals allowed by this ordinance. To be eligible for this exemption, an owner must apply for a minor conditional use permit and provide proof of National Service Animal Registry for each qualifying animal. (Ord. 12-03_

(F) Stables, Public. (Ord. 11-02)

1. Stables shall require a minimum of four (4) acres.

2. The number of animals shall be nor more than four (4) per each acres of property in the stable use.

3. The property shall provide one-half (1/2) of a parking space for each animal housed at the facility.

4. Property owners shall provide toilet facilities and shall maintain such facilities in a sanitary condition.

5. The applicant shall submit a plan to the Land Use authority for control of dust, odor, and insects.

6. The applicant shall submit a site plans showing the location of all existing and proposed structures and utilities and landscaping.

7. All utilities servicing the stable shall be underground.

8. No stable shall be located within two hundred (200) feet of any residential dwelling unit.

9. Public access to the facility shall be from dawn to dusk.

10. Horse exercise areas such as working yards, walker equipment areas, or paddocks shall use dust control by means of constructed water delivery systems or chemically treated exercise surface areas.

(G) Vietnamese Potbellied Pigs. Vietnamese Potbellied Pigs shall be considered household pets for the purposes of this Title and shall be allowed in any residential or agricultural zone subject to the following conditions:

1. No more than two (2) pigs may be kept per household, together with dependent young up to four (4) months in age.

2. The animals shall be purebred miniature Vietnamese potbellied pigs certified by the North American Potbellied Pig Association. The Land Use Authority may require proof of certification records as a condition of approval. (Ord. 06-17) (Ord. 08-07)

3. The animals may not exceed one hundred (100) pounds in weight. (1994) (Ord. 06-17)

(H) Rabbits and Hens. Residents may keep rabbits and hens outside the dwelling subject to the following conditions: (Ord. 08-07)

1. The residents shall have no more than six (6) hens or six (6) rabbits, or a combination of both not exceeding six (6), excluding dependent young. (Ord. 08-07)

2. The animals shall be kept in pens, coops, or contained in a fenced area. (Ord. 08-07)

3. All pens, coops, and cages shall be kept clean and free from objectionable odor and waste. (Ord. 08-07)

4. Roosters are not permitted in any residential zones, excluding R-1 Residential zone lots that have a minimum size of twenty-one thousand seven hundred eighty (21,780) square feet. (Ord. 08-07)(Ord. 12-03)

10-6-050: LOT AND YARD REGULATIONS.

(A) Lot Standards. Except as this Title may otherwise permit, every lot within the City shall have such area and width as required by the zone in which the lot is located and shall have frontage upon a dedicated or public street before the Land Use Administrator may issue a building permit. (Ord. 08-07)

(B) Lots Fronting on Arterial and Collector Streets. Residential lots fronting on streets designated by the Syracuse General Plan as arterial or collector streets shall have setbacks to allow for road expansion. Homes that have the main entrance fronting collector and arterial streets shall have a minimum setback of forty (40) feet. If the home is otherwise positioned, the setback from the collector or arterial street shall be thirty (30) feet.

Unless otherwise required in Planning Commission review, this Section shall not apply to lots positioned on arterial or collector streets already improved to the designated width outlined in the City's Master Transportation Plan.

(C) Yard Encroachments. This Title prohibits any encroachments into minimum required yard space, other than the following:

1. Chimneys, bay windows, sills, lintels, cantilevers, or other ornamental features may project not more than twenty-four (24) inches into required front, rear, and side-yard spaces, provided they are not more than eight (8) feet in width. This Title prohibits side yard encroachments within cluster subdivisions with side yard setbacks less than seven (7) feet, and in no instance shall the side yard distance between two (2) structures be less than ten (10) feet.

2. Unsupported cornices, eaves and gutters, and terraces may project ten (10) feet into any required front, rear, or side yard. Uncovered porches and decks may project ten (10) feet into any required front or rear yard. (Ord. 08-07) (Ord. 10-02)

3. Attached covered decks and patios may encroach into rear yards provided the total covered patio width does not exceed thirty-three (33) percent of the total length of the principal structure to which it will attach and it does not extend closer than twenty (20) feet to the required rear yard line.

4. Fences may encroach, as provided in Section 10-6-060(A). Signs and yard lights may encroach as provided in Chapter 9. Stairs and ramps may encroach up to three (3) feet to any property line subject to compliance with Section 10-6-060 (A) and (B). (Ord. 08-07) (Ord. 10-02)

5. Building accessories designed and intended to control light entering a building, as either a permanent or temporary part of such building, may project three (3) feet into any required yard space provided they are fixtures on only the wall of the main building.

6. Gasoline pump islands, where permitted, shall be set back twelve (12) feet. Pump islands under roofs or canopies must comply with building setback requirements.

7. Corner lots may have one yard, fronting on a street, reduced to twenty (20) feet.

8. In the case where a home is part of a larger planned unit development and the home is located such that there is a common property area located immediately adjacent to the rear property line of said home, then attached covered decks, patios and porches may extend into the rear yard setback up to twenty (20) feet toward the required rear yard property line if all of the following conditions are met: (Ord. 09-16)

   (a) The common area behind the home extends more than thirty (30) feet beyond the rear yard property line; (Ord. 09-16)

   (b) There is no fence, shrub or other boundary delineation along the rear property line between the property and the common area to be maintained in perpetuity; (Ord. 09-16)

   (c) Both the home and home owner requiring the exception are part of the Home Owners Association (or similar organization) that has ownership of the common area and the home meets all other established guidelines as set forth by the Association or organization and city codes. (Ord. 09-16)

   If said conditions are not all met, then covered decks, patios, and porches shall meet the requirements as set forth in Section 10-6-050. (Ord. 09-16)

(D) Yard Space for One Building Only. No required yard or other open space around an existing building, or which hereafter provides such around any building for the purpose of complying with the provisions of this Title, shall be considered as providing yard or open space for any other building on the same or adjoining lot. No one shall acquire by purchase or other means the required side yards or the width of their lot by making substandard the side yards or width of any adjacent lot. No one shall sell or lease away space needed to meet the required width, yard, area, parking, or other requirements of this Title for a lot or building. (Ord. 08-07)

(E) Unobstructed Yards – Exceptions. Every part of a required yard shall be open from the ground to the sky, unobstructed, except for the following:

1. Accessory buildings and structures in a rear yard, as permitted.

2. Permitted encroachments into yard spaces as set forth in Section 10-6-050(C). (Ord. 08-07)

3. Fences and objects of natural growth, except as stated in Section 10-6-060(A) and (B). (Ord. 08-07)

(F) Reduction in Size of Lots Prohibited.

1. No one shall cut off, place under separate deed, or sell from a larger building lot a parcel of land with less than the minimum width and/or area required by the zone in which it is located for the purpose,

whether immediate or future, of building or developing as a building lot. (Ord. 08-07)

2. No one shall further reduce, in any manner, a building lot or parcel of land, held under separate ownership at the time this Title became effective, with less than the width, depth, or area required by this Title. (Ord. 08-07)

10-6-060: MISCELLANEOUS REQUIREMENTS AND PROVISIONS.

(A) Height of Fences, Walls, and Hedges in Residential Zones. Property owners may erect fences, walls, and hedges to the permitted building height in the zone in which they are located provided they are not within any required yard space. Fences, walls, or hedges in any required yard shall not exceed six (6) feet in height nor impede visibility of sidewalks and streets from adjacent driveways and shall comply with the requirements of Section 10-6-060(B). Where a retaining wall is reasonable and necessary, located on the line separating lots, such retaining wall may include a fence, wall, or hedge on top to the same height that would otherwise be permitted if no retaining wall existed. (Ord. 08-07)

(B) Visibility at Intersections. Notwithstanding any provisions of this Title in any district, fences, walls, signs, hedges, or other plantings may not encroach within the required clear-visibility triangle located at the intersection of two (2) roads or the intersection of a road and a non-residential driveway. No one shall erect, place, or plant anything or allow anything to grow in such a manner as to impede vision between a height of two and one-half (2 1/2) feet and eight (8) feet above center-line grades of the adjoining street center-line surface elevation. Property owners shall maintain all tree branches so that none of them are lower than eight (8) feet in clear site triangle area. The configuration of a clear-visibility triangle is shown in Exhibit 10-6-060.a, and the length of each leg, measured along the curbline or edge of roadway or edge of non-residential driveway shall be forty (40) feet, or based upon applicable speed limits greater than forty (40) mph as per AASHTO's "*Policy on Geometric Design of Highways and Streets*. (Ord. 08-07) (Ord. 09-09)

Exhibit 10-6-060.a

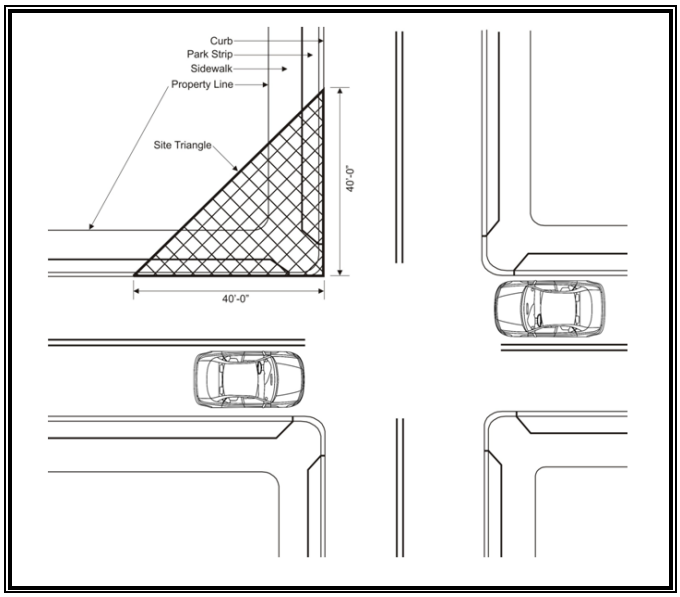

(Ord. 08-07)

(C) Water Supply and Sewage Disposal. If an approved public water or sewer system is within three hundred (300) feet of a proposed building lot or development, structures requiring sanitation facilities must connect to the public water or sewer system. Existing structures shall have ninety (90) days to connect. The Planning Commission may grant a ninety (90) day extension upon application and evidence of a hardship on the part of the property owner. Domestic water supply and sewage disposal shall comply with the Davis County Board of Health requirements as represented by a certificate of approval from said Board of Health in all applications for a building permit where either an approved supply of piped water under pressure or a public sewer is not available.

(D) Outdoor Storage and Waste Disposal. No one shall store in bulk highly flammable or explosive liquids, solids, or gasses above ground except in the A-1 Zone. Other outdoor storage facilities for junk yards, fuel, raw materials, and products, except for agricultural products~~,~~ and permitted above-grade waste disposal areas, shall be enclosed by a fence or wall at least six (6) feet in height and impervious to sight that is adequate to conceal such facilities from adjacent properties and the street. Such wall or fence shall be constructed and maintained in such a way and of such materials as to be pleasing to the sight from the street. No one shall deposit materials or wastes upon any property in such form or manner that may allow same to transfer off such property by natural causes or forces. All materials or wastes, which might cause fumes or dust or constitute a fire hazard or may be edible by or otherwise attractive to rodents or insects, shall not be stored outdoors unless put in closed containers.

No one may store junk, building materials, debris, junk vehicles, or commercial equipment in any yard or other open space except as specifically permitted herein.

(E) Field Drains and Subsurface Water. On properties where field drains exist it shall be unlawful to impede, reduce, or in any way restrict the function and purpose of such field drain. Furthermore, it shall be the responsibility of the property owner to see that no use, building, or development on the property so affects any existing field drains.

(F) Sump Pump Discharge Regulation. Property owners shall connect sump pump discharge pipes to a City storm drain or other land-drain system when available and abutting to the property unless otherwise directed by the City Engineer. The City Engineer shall review and approve connections of sump pump discharge pipes to City-owned utility systems. Dwellings and buildings may discharge sump pumps to the finished grade of the building lot. All discharges of sump pumps to the finished grade for reasons of non-connection or disconnection of a previously-connected system shall meet all of the following provisions:

1. The discharge pipe shall exit the building at the finished grade.

2. The point of discharge must be a minimum of two (2) horizontal feet from a basement foundation wall and no closer than five (5) feet from the property line.

3. The property owner shall ensure that the discharge flows parallel to or away from the nearest property line and shall be directed by topographical relief to drainage easements and shall maintain all discharge entirely upon the subject premises on which the sump pump is located.

4. The discharge water shall not discharge upon a street, park strip, curb, sidewalk, or other public right of way.

5. The discharge water shall not create icy conditions on any street, curb, or pedestrian walkway within or adjacent to the subject premises' lot lines.

6. Owners of dwellings and buildings who disconnect sump pumps as required in this Subsection may request the City Council to waive the provisions of this Subsection upon submission to and acceptance by the City Engineer of a sump discharge system designed by a registered professional civil engineer for purposes of complying with the intent of this Subsection. (Ord. 06-27)

10-6-070: SHADE TREES.

(A) City Forester. The City Council shall designate a specific City employee to serve as the City Forester. The City Forester shall be responsible for administering the provisions of this Section and the policies and recommendations of the City Council. The City Forester shall have jurisdiction and supervision of all trees and plants planted or growing in public rights-of-way or similar places within the City to insure safety or to preserve the beauty of such public places. When authorized by proper authority, it shall be the Forester's duty to have trees and other plants in street rights-of-way and on public property planted, trimmed, sprayed, preserved, and removed. (Ord. 08-07) (Ord. 11-02)

(B) Street Tree Species. The following list constitutes the official species of trees that property owners may plant on land lying between property lines on either side of all streets within the City. No one shall plant any other species as street trees, other than those included in this list, without written permission of the City Forester who may approve the planting of other tree species at his discretion. (2000) (Ord. 08-07)

LARGE 10’ or greater park strip	**MEDIUM** 6’ park strips	**SMALL** 4’ to 6’ park strips
Common Hackberry Thornless Honey Locust Chinese Pistache Bur Oak English Oak Norway Maple Red Maple Littleleaf Linden Crimean linden Japanese Zelkova Ginko Horse Chestnut Northern Oak Beech London Plain Tree European Beech Sweet Gum Tulip Sycamore Maple Sugar Maple White Ash White Oak English Oak Black Locust Horsechestnut	Japanese Pagoda Fruitless Mulberry Mountain Alder Hedge Maple Callery Pear Varigated Box Elder Mountain Ash Upright English Oak Chinaberry Chanticleer Pear Sunburst Honeylocust Idaho Flowering Locust	Golden Raintree Lavelle Hawthorn English Hawthorn Bechhtel Crabapple Redbud Crabapple Dorothea Crabapple Japanese Crabapple Radiant Crabapple Snow drift Crabapple Scarlet Hawthorn Golden Chain Tree Rocky Maple Paperbark Maple Bigtooth Maple Kwanzan Cherry Eastern Redbud Globe Norway Maple Bradford Pear Golden Rain

(Ord. 08-07)

(C) Spacing. The spacing of street trees will be in accordance with the three (3) species-size classes listed above, and no one may plant trees closer together than the following: small trees, thirty (30) feet; medium trees, forty (40) feet; and large trees, fifty (50) feet; except that special plantings designed or approved by a landscape architect are exempt from these spacing requirements. (Ord. 08-07)

(D) Distance from Curb and Sidewalk. The distance trees may be planted from curbs or curb lines and sidewalks will be in accordance with the three (3) species-sized classes listed above, and no one may plant trees closer to any curb or sidewalk than the following: small trees, two (2) feet; medium trees, three (3) feet; and large trees, four (4) feet.

(E) Distance from Street Corners and Fire Hydrants. No one may plant a street tree closer than thirty-five (35) feet from any street corner, measured from the point of nearest intersecting curbs or curb lines. No one may plant a street tree closer than ten (10) feet from any fire hydrant.

(F) Utilities. No one may plant street trees, other than those species listed as small trees, under or within ten (10) lateral feet of any overhead utility wire or over or within five (5) lateral feet of any underground water line, sewer line, transmission line, or other utility.

(G) Public Tree Care. The City shall have the right to plant, prune, maintain, and remove trees, plants, and shrubs within the lines of all streets and public grounds as may be necessary to insure public safety or to preserve or enhance the symmetry and beauty of such public grounds and may require property owners to do the same.

(H) Removal of Trees. The City, through its City Forester, shall condemn and remove or order the removal of any tree, tree stump, shrub, or plant upon any public street or public property within this City where the same is dead, diseased, or deemed, for any reason a nuisance or is not in compliance with adopted ordinances. The City, through its City Forester, shall have authority to condemn and remove, or order the removal of, any tree, tree stump, shrub, or plant upon private property when the City Forrester finds such action necessary for public safety, to prevent the spread of disease or insects, or to prevent the upheaval of any public street, curb, or sidewalk. The City Forester shall have the authority, after exercising due diligence, to notify abutting property owners, to remove or order the removal of any tree, shrub, or plant upon any public right-of-way or on any public property in violation of this Section or any other ordinance. The City Forester shall have the authority to report any violations of this Section to the City Council for its action. Trees, shrubs, or plants removed under the provisions of this Title shall be so removed at the property owner's expense or at the expense of the abutting property owner if said plants are in the street right-of-way. (Ord. 08-11)

(I) Tree Topping. It shall be unlawful as a normal practice for any person, firm, or City department to top any street tree, park tree, or other tree on public property. The definition of topping is the severe cutting back of limbs to stubs larger than three (3) inches in diameter within the tree's crown to such a degree so as to remove the normal canopy and disfigure the tree. Trees severely damaged by storms or other causes, or certain tree~~'~~s under utility wires or other obstructions where other pruning practices are impractical, may be exempt from this Section at the determination of the City Tree Board.

(J) Pruning, Corner Clearance. Every owner of any tree overhanging any street or right-of-way within the City shall prune the branches so that such branches shall not obstruct the light from any street lamp or obstruct the view of any street intersection and so that there shall be a minimum clear space of eleven (11) feet above the surface of the street and a minimum clear space of seven (7) feet above the surface of the sidewalk. Said owners shall remove all healthy, dead, diseased, or dangerous trees~~,~~ or tree limbs that constitute a menace to the safety of the public or prevent the City from maintaining City sidewalks, curb, or streets. The City shall have the right to prune any tree or shrub on private property when it interferes with the proper spread of light along the street from a streetlight or interferes with visibility of any traffic-control device, traffic sign, or street-maintenance equipment.

(K) Willful Injury to Trees. No person shall willfully injure or destroy any tree on public streets, public parks, or other public property of the City by any means including, but not limited to, the following:

1. Constructing a concrete, asphalt, brick, or gravel sidewalk or otherwise filling up the ground area around any tree so as to shut off air or water from the roots, except under written authority from the City Forester.

2. Piling building material, equipment, or other substance around any tree so as to cause injury.

3. Pouring any injurious matter on or around any tree or on the ground around it or on any lawn or sidewalk.

4. Injuring any tree, tree stake, or guard with any vehicle or animal or in any other manner causing injury to any tree or lawn or public property.

(L) Removal of Stumps. All stumps of street and park trees shall be removed below the surface of the ground so the top of the stump shall not project above the surface of the ground. (Ord. 06-27)

10-6-080: BUFFER YARDS.

(A) Purpose. The buffer yard is a unit of land, together with the planting required thereon, to ameliorate nuisances between adjacent land uses or between a land use and public road. Both the calculated amount of land and the type and amount of planting specified for each buffer yard required by this Chapter shall insure they do, in fact, function as "buffers."

Buffer yards shall separate different land uses from each other in order to eliminate or minimize potential nuisances such as dirt, litter, noise, glare of lights, signs and unsightly buildings or parking areas or to provide spacing to reduce adverse impacts of noise, odor, or danger from fires or explosions.

(B) Location of Buffer Yards. Buffer yards shall be located on the outer perimeter of a lot or parcel adjacent to a different use and shall extend along the entire boundary of the property adjacent to that use. Fencing associated with buffer yards shall be located on property lines except as described in paragraph G.

(C) Determination and Approval of Buffer Yards Required. To determine the type of buffer yard required between two (2) adjacent parcels or between a parcel and a street, the following procedure shall apply:

1. Identify the land use category of the proposed use.

2. Identify the use category of the existing land use adjacent to the proposed use by an on-site survey to determine the intensity classification from Table 1. Agricultural determination need not directly relate to whether or not someone is farming the adjacent property.

3. Determine the buffer yard required for the proposed development by using Table 2.

4. Using Buffer Tables A thru E, identify the buffer yard options using the buffer yard requirement determined in Table 2.

The City Council, upon recommendation of the Planning Commission, shall approve buffer yard options contained in the Buffer Table.

(D) Use of Buffer Yards. The buffer yard may be used to provide for passive recreation and may contain pedestrian, bike, or equestrian trails, provided that: (1) the buffer yard does not eliminate any plant material, (2) provisions are in place to ensure maintenance of the total width of the buffer yard, and (3) all other requirements of this Title are met. In no event, however, shall buffer yards contain the following uses: Ice skating rinks, play fields, ski hills, stables, swimming pools, and tennis courts.

(E) Ownership of Buffer Yards. Buffer yards may remain in the ownership of the original developer of the land use or be subject to deed restrictions and subsequently freely conveyed, or the proprietor may transfer ownership to any consenting grantees, such as adjoining land owners or home owners' association, or deed the same to the City provided that any such conveyance

adequately guarantees the protection of the buffer yard for the purposes of this Title.

(F) General Landscaping Requirements. Buffer Tables A thru E identify details for landscaping requirements and specify the number and types of plants required in one hundred (100) foot increments. Any substitute plants require approval from the City Council. (Ord. 08-11)

(G) Alternative to Fencing Requirements. When the owner of a buffer yard, identified in Tables D and E, transfers same to an adjoining property owner, the fence location may shift to the opposite side of the buffer area.

TABLE 1
Existing Land Use Classification

Classification	Existing land use	Classification	Existing land use
1	Agriculture Farm Industry	4	R-3 Residential R-4 Residential PRD Residential Commercial Pre-Schools
2	R-1 Residential Outdoor Recreational Parks	5	Churches Hospitals Medical-Care Facilities Office Complex Professional Offices Nurseries Greenhouses
3	R-2 Residential Indoor Recreation Day-Care Centers Schools Cemeteries	6	Industrial Neighborhood Services Business Park Dog Kennels Commercial Commercial Entertainment Research Park

(Ord. 12-12) (Ord. 12-14)

TABLE 2
Buffer Classification Requirements

		EXISTING LAND USE CLASSIFICATION					
Proposed Land Use	**Buffer Classification Requirements***	**1**	**2**	**3**	**4**	**5**	**6**
	Industrial	__	E	E	E	E	__
	Neighborhood Services	__	C	C	C	C	__
	Business Park	__	D	D	D	D	__
	General Commercial	A	D	D	D	D	__
	C-2 Commercial	A	C	D	E	D	—
	Agriculture	__	__	A	A	B	C
	R-1 Residential	A	__	__	A	B	C
	R-2 Residential	A	__	__	__	C	D

	R-3 Residential	A	__	__	__	C	E
	R-4 Residential	A	A	__	__	C	E
	Private Residential Development	A	C	D	__	D	E
	Professional Office	C	D	D	D	__	__
	Research Park	C	D	E	E	E	E

(Ord. 12-12) (Ord. 12-14)

BUFFER TABLE A

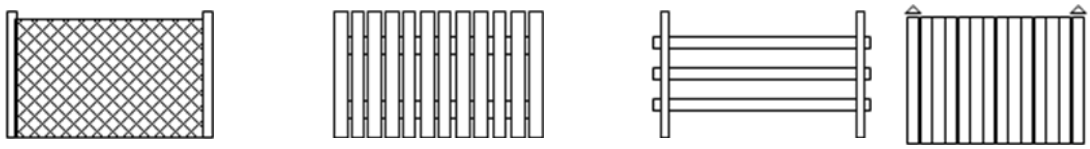

5' Chain Link Fence | 5' Wood Stockade Fence | 5' Wood Rail Fence | 5' Vinyl Fence

AND

Required Plat Units/100'

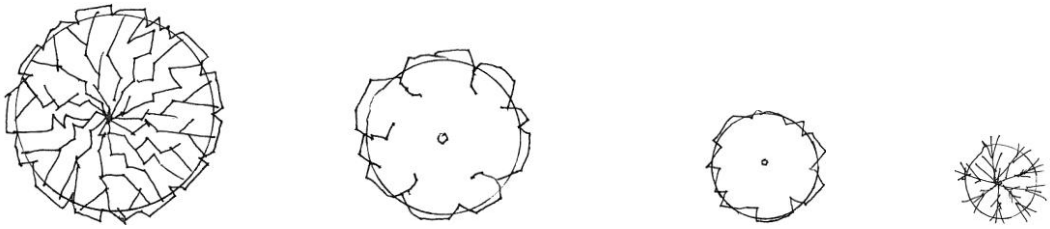

(0.6) Canopy Tree | (1) Understory Tree | Shrub | Evergreens/Conifers

Plant Multiplier

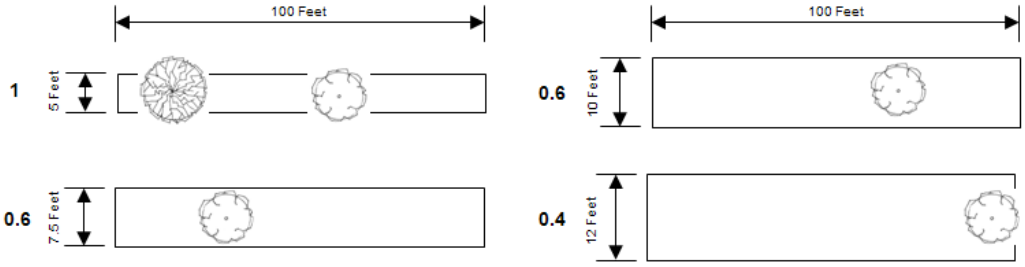

* Refer to MINIMUM LOT STANDARDS associated with each zone for minimum yard setback requirements. (Ord. 08-11)

NOTE: Any residential use abutting agriculture or farm industry must have a five- (5) foot non-climbable fence.

(Ord. 08-07) (Ord. 08-11)

BUFFER TABLE B

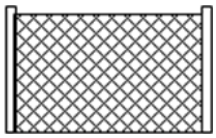

5' Chain Link Fence

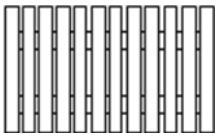

5' Wood Stockade Fence

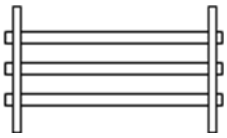

5' Wood Rail Fence

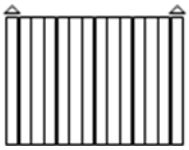

5' Vinyl Fence

AND

Required Plat Units/100'

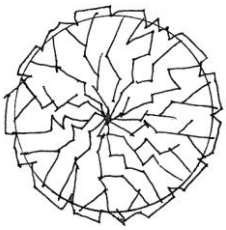

(1) Canopy Tree

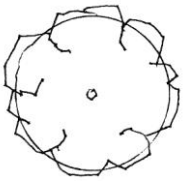

(1) Understory Tree

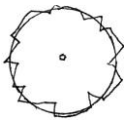

Shrub

Evergreens/Conifers

Plant Multiplier

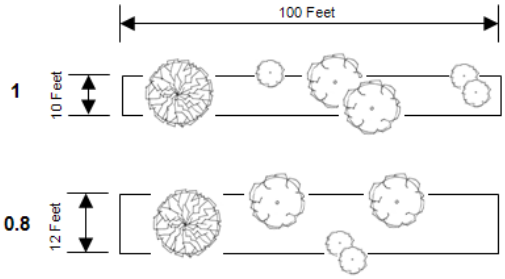

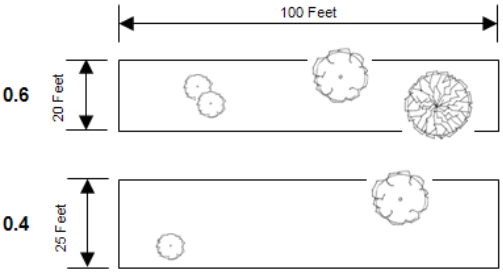

BUFFER TABLE C

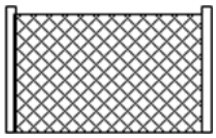

6' Chain Link Fence
with Privacy Slats

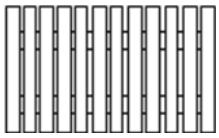

6' Impervious and Opaque
Wood Stockade or Vinyl Fence

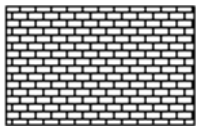

6' foot Masonry Wall

AND

Required Plat Units/100'

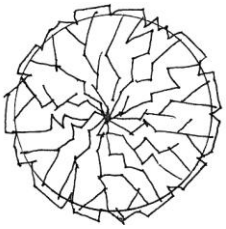

(2) Canopy Tree

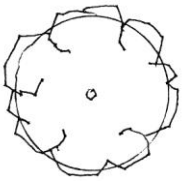

(4) Understory Tree

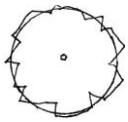

(6) Shrub

Evergreens/Conifers

Plant Multiplier

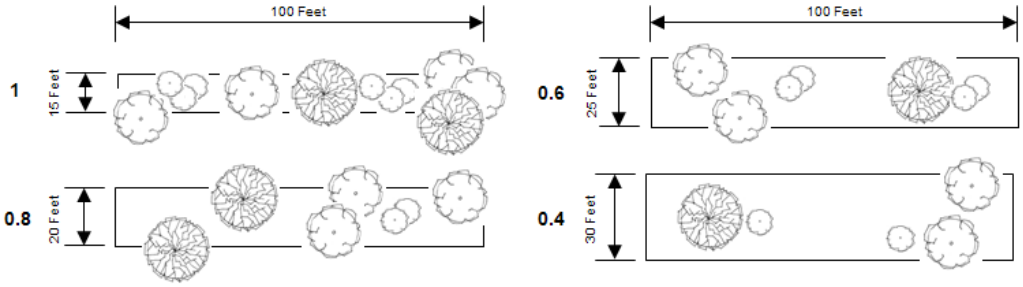

(Ord. 08-07) (Ord. 08-11)

BUFFER TABLE D

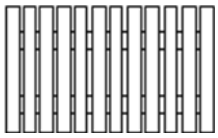

6' Impervious and Opaque
Wood Stockade or Vinyl Fence

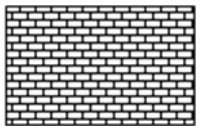

6' foot Masonry Wall

AND

Required Plat Units/100'

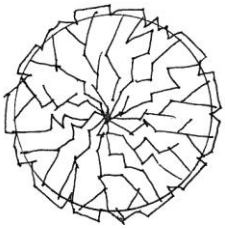

(3) Canopy Tree

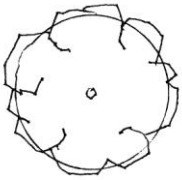

(6) Understory Tree

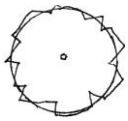

(9) Shrub

Evergreens/Conifers

Plant Multiplier

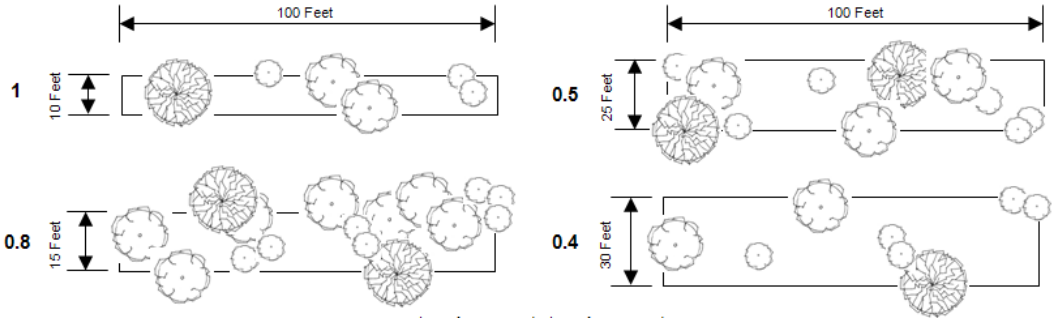

BUFFER TABLE E

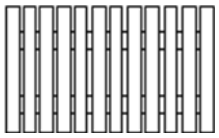

F1 = 6'

F2 = 8'

Impervious and Opaque
Wood Stockade or Vinyl Fence

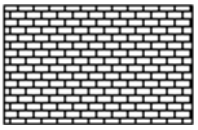

F1 = 6'

F2 = 8'

Masonry Wall

OR

Required Plat Units/100'

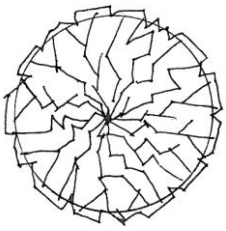

(3) Canopy Tree

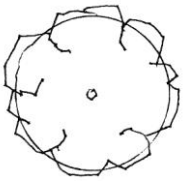

(6) Understory Tree

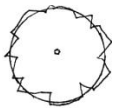

(9) Shrub

Evergreens/Conifers

Plant Multiplier

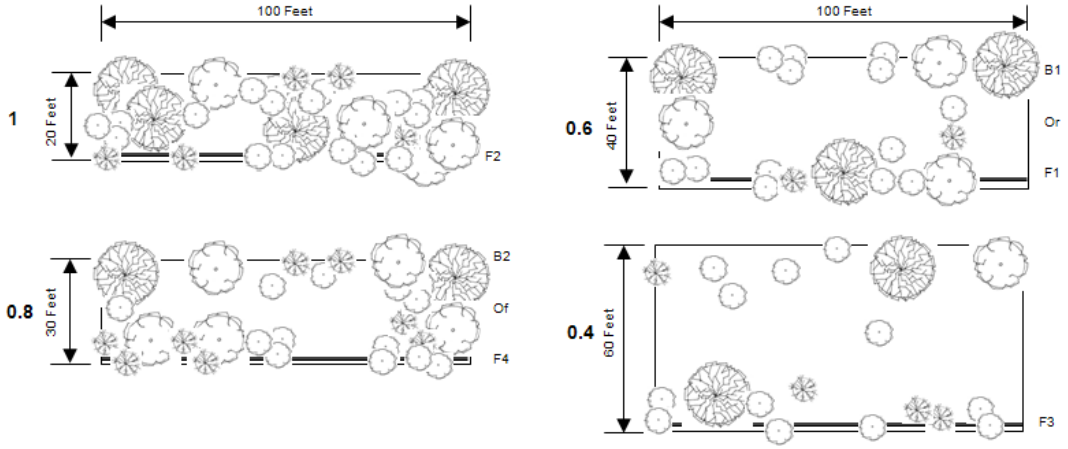

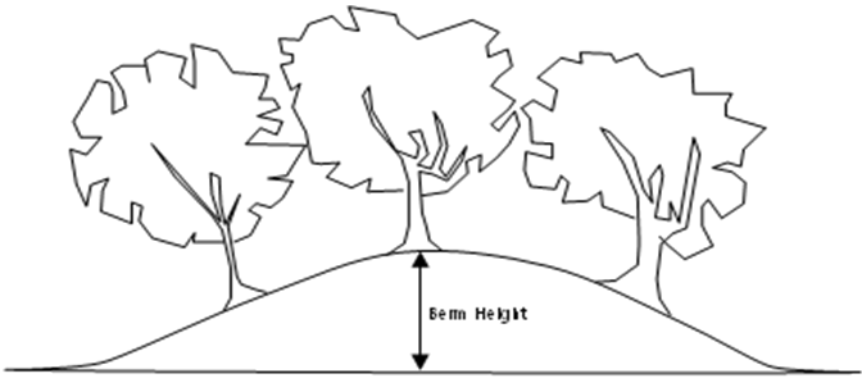

Symbol	Height	Material
B1	6 feet	Earth
B2	8 feet	Earth

(Ord. 08-07) (Ord. 08-11)

(Ord. 08-07) (Ord. 08-11)

10-6-090: AGRICULTURE-PROTECTION AREAS.

(A) Purpose. An agriculture-protection area is a geographic area created under the authority of the State of Utah and Syracuse City that is granted specific legal protection for agricultural production, which includes the production of crops, livestock, and livestock products or other agricultural production activities as determined by the Davis County Agriculture Protection Area Advisory Board and the Syracuse City Planning Commission, acting as the Land Use Authority. (Ord. 06-17)

(B) Proposal to Create. An applicant proposing to create an agriculture-protection area within Syracuse City boundaries shall submit to the Community Development Department an agriculture area request form and a submittal fee for processing. The City Council shall establish the submittal fee from time to time by resolution. (Ord. 08-07)

The request shall identify the boundaries of the land proposed to become part of an agriculture-protection area, any limits on the types of agriculture production that will be an allowed use within the agriculture-protection area, and the names of the owners of record of the land and the tax parcel number identifying each parcel. Agriculture-protection areas must have a minimum of ten (10) acres to be eligible for consideration of protection. The City Council shall provide notice of the proposal by publishing notice in a newspaper having general circulation within the community. The notice shall contain a statement that an applicant filed a proposal for the creation of an agriculture-protection area with the City, the proposal is open for public inspection, and any entity affected by the proposal may file objections or modifications to the proposal.

(C) Review and Approval. After fifteen (15) days from the date of the notice, the City Council shall refer the proposal, with any objections and proposed modifications, to the County Advisory Board and the City Planning Commission for their review, comments, and recommendations. Within forty-five (45) days after receipt of the proposal, the County Advisory Board and City Planning Commission shall submit a written report to the City Council that recommends any modifications to the proposal, indicates whether or not the land is currently being used for agricultural production, states whether the zoning is appropriate for agriculture and whether the land is viable for agricultural production, the extent and nature of existing or proposed farm improvements, advisement of land-use activities on adjoining property, and anticipated trends in agricultural and technological conditions. The Planning Commission will evaluate any objections to the proposal and make a recommendation to the City Council to accept, accept and modify, or reject the proposal.

After receipt of the written reports from the Advisory Board and Planning Commission, or after forty-five (45) days, whichever is earlier, the City Council shall schedule a public hearing through notice in a newspaper having general circulation within the community. The City Council shall convene the public hearing at the time, date, and place specified in the notice and take verbal or written testimony from interested persons. Upon completion of the public hearing, The City Council shall approve, modify and approve, or reject the agriculture-protection area proposal. (Ord. 06-17)

10-6-100: CONDITIONAL USES. The following conditional use shall comply with the applicable standards established herein and may be subject to additional regulations specific to the applicable zone. The zone specific provisions shall apply if a conflict exists

between general and specific conditional use provisions. Each applicable zone establishes if the use is conditional or permitted. (Ord. 08-07) (Ord. 10-02) (Ord. 11-02) (Ord. 11-10)

(A) Minor. The following conditional uses are minor and require approval as established in Section 10-4-080: (Ord. 11-02)

1. Accessory Uses and Buildings two hundred (200) square feet or larger. See Section 10-6-010. (Ord. 11-02) (Ord. 11-10)

2. Apiaries. (Ord. 10-02)

(a) Unlawful Conduct. It shall be unlawful for any beekeepers to keep any colony or colonies in such a manner or of such disposition as to cause any unhealthy condition, interfere with the normal use and enjoyment of human or animal life of others or interfere with the normal use enjoyment of any public property or property of others. (Ord. 08-07)

(b) Flyways. In each instance in which any colony is situated within 25 feet of a public or private property line of the tract upon which the apiary is situated, as measured from the nearest point on the hive to the property line, the beekeeper shall establish and maintain a flyway barrier at least 6 feet in height consisting of a solid wall, fence, dense vegetation or combination thereof that is parallel to the property line and extends 10 feet beyond the colony in each direction so that all bees are forced to fly at an elevation of at least 6 feet above ground level over the property lines in the vicinity of the apiary. (Ord. 08-07)

(c) Water. Each beekeeper shall ensure that a convenient source of water is available to the bees at all times during the year so that the bees will not congregate at swimming pools, pet watering bowls, bird baths or other water sources where they may cause human, bird or domestic pet contact. (Ord. 08-07)

(d) Beekeeping Equipment. Each beekeeper shall ensure that no bee comb or other beekeeping equipment is left upon the grounds of an apiary site. Upon removal from a colony, all such equipment shall promptly be disposed of in a sealed container or placed within a building or other bee-proof enclosure. (Ord. 11-04)

(e) Number of Colonies. It shall be unlawful to keep more than the following number of colonies on any tract within the city, based upon the size or configuration of the tract on which the apiary is situated: (Ord. 08-07) (Ord. 11-04)

i. less than one-half acre tract size – up to 5 colonies. (Ord. 11-04)

ii. one-half acre or larger tract size – up to 10 colonies. (Ord. 11-04)

iii. Regardless of tract size, where all colonies are situated at least 200 feet in any direction from all property lines of the tract on which the apiary is situated, there shall be no limit to the number of colonies. (Ord. 11-04)

(f) Compliance. Upon receipt of information that any colony situated within the city is not being kept in compliance with this article, the director shall cause an investigation to be conducted. If he finds that grounds

exist to believe that one or more violations have occurred he shall cause a written notice of a nuisance to be issued to the beekeepers in accordance with Title VI of the Syracuse City Code. (Ord. 08-07)

3. Dog Kennels, Residential. See Section 10-6-040. (Ord. 11-02)

4. Educational Services, Private. (Ord. 11-10)

5. Greenhouses. (Ord. 11-10)

6. Home Occupations, Minor. (See Section 10-7-040) (Ord. 10-02) (Ord. 11-02)

7. Optical Shops. (Ord. 11-10)

8. Private Parks and Recreational Activities. (Ord. 08-07) (Ord. 10-02)

9. Signs. See Chapter 9 of this Title (Ord. 10-02)

10. Stables, Public. (See Section 10-6-040) (Ord. 10-02) (Ord. 11-02)

11. Temporary Commercial Uses (See Section 10-7-050. (Ord. 10-02) (Ord. 11-10)

12. Temporary Use of Buildings. Conditional use permits for this use shall be valid for a period of one (1) year. The Land Use Administrator may grant extension periods, not to exceed six (6) months, to such a permit so long as the applicant applies prior to the expiration date, ensures the building complies with all other provisions of this Section, and any associated building permit remains valid. (Ord. 08-07) (Ord. 10-02) (Ord. 11-02)

    (a) Temporary business buildings, in any zoning district, used during construction of the permanent structure shall comply with following conditions: (Ord. 10-02) (Ord. 11-02)

        i. Applicant acquires a building permit for the permanent structure prior to placement of the temporary building on the property. (Ord. 08-07)

        ii. The site provides adequate parking surfaces and sanitary sewer facilities as well as complete skirting of the temporary structure.

        iii. Applicant locates the temporary structure outside all clear-view areas outlined in Section 10-6-060(B). (Ord. 08-07)

        iv. The temporary structure complies with all setbacks for the zoning district in which it will be located.

        v. Applicant guarantees removal of the temporary structure from the premises within fourteen (14) days of occupancy of the permanent structure.

        vi. Applicant guarantees, in the case of temporary sales offices in residential zoning districts, the removal of said offices within fourteen (14) days after occupancy of the model home~~,~~ or six (6) months after approval for the temporary sales office if applicant does not complete the model home.

(b) Model homes used in residential zones for the display of home features and amenities offered by the developer, and for marketing of lots or structures in the subdivision in which the model homes resides, shall comply with the following conditions:

i. The model home–shall convert to single-family use when the last phase within the subdivision is more than eighty (80) percent developed.

ii. Applicant shall provide four (4) off-street parking spaces on or abutting the subject property.

iii. Applicant provides and follows an approved exterior lighting plan indicating the location, direction, and timing of all lighting on the site.

iv. Applicant provides and complies with an approved signage plan indicating the size and location of all signs, flags, banners, etc.

v. The applicant limits hours of operation to such as are reasonable and sensitive to the adjacent uses so as to prevent any negative impacts to such adjacent uses. (Ord. 08-07)

vi. No one uses the model home as a general real estate office, construction management office, or administrative service office for offsite subdivisions or developments.

(B) Major. The following conditional uses are major and require approval as established in Section 10-4-080: (Ord. 11-10)(Ord. 12-03)

1. Animal Hospitals. (Ord. 11-10)

2. Churches or Religious Service Buildings. (Ord. 11-10)

3. Cluster Subdivisions {See Chapter 15 of this Title} (Ord. 08-07)

4. Day Care Centers. (Ord. 11-10)

5. Dwellings, Single-Family. (Ord. 11-10)

6. Dwellings, Two- (2) Family The owner of such a residential dwelling shall: (Ord. 10-02) (Ord. 11-10)

(a) Meet the International Building Code standards. (Ord. 11-02)

(b) Provide a minimum of two (2) off-street parking spaces per dwelling unit. (Ord. 06-17) (Ord. 11-02)

(c) Be responsible for payment of all utilities. (Ord. 06-27) (Ord. 11-02)

(d) Install utility services for each dwelling unit as provided in State law. (Ord. 08-07) (Ord. 11-02)

(e) Comply with all requirements of the International Residential Code as adopted by the State of Utah for two- (2) family dwellings. (Ord. 10-02)

7. Dwelling Groups {See Section 10-6-030(A)} (Ord. 08-07)

8. Home Occupations, Major {See Section 10-7-040} (Ord. 10-02)

9. Medical and Other Health Facilities. (Ord. 11-10)

10. Preschool Centers. (Ord. 11-10)

11. Professional Non-Retail Services, up to a maximum twenty-five (25) percent of the commercial subdivision. (Ord. 11-10)

12. Public and Quasi-Public Buildings. (Ord. 11-10)

13. Public Parks. (Ord. 11-10)

14. Sexually-Oriented Businesses {See Chapter 27 of this Title} (Ord. 08-07)

15. Sewage Treatment Plants. (Ord. 11-10)

16. Signs {See Chapter 9 of this Title}

17. Wireless Communication Towers. {See Chapter 26 of this Title} (Ord. 08-07) (Ord. 11-10)

CHAPTER 7

HOME OCCUPATIONS AND TEMPORARY COMMERCIAL USES

10-7-010: Purpose

10-7-020: License Required

10-7-030: Application and Fee

10-7-040: Home Occupation

10-7-050: Temporary Commercial Uses

10-7-010: PURPOSE. The purpose of this Chapter is to establish standards to regulate the time, place, and manner in which temporary, seasonal, and home occupation uses may occur. (Ord. 10-02)

10-7-020: LICENSE REQUIRED. Unless otherwise provided, it shall be unlawful for any person to engage in any business within the corporate limits of Syracuse City without first having obtained a business license (see Title V "Business Regulations"). (Ord. 10-02)

10-7-030: APPLICATION AND FEE. Application and fees for business licenses shall be in accordance to Title V entitled "Business Regulations". (Ord. 10-02)

10-7-040: HOME OCCUPATION.

(A) Purpose: The purpose for home occupations is to encourage the conducting of the majority of business activities within the more appropriate commercial zones while allowing business activities within residences on a limited basis if such activities comply with the standards of this Section. All home occupations shall be secondary and incidental to the residential use. The occupants should conduct such businesses so that neighbors, under normal conditions, would not be aware such businesses exist. Home occupations are a temporary privilege that the Land Use Authority can revoke upon a determination that the home occupation disrupts the residential neighborhood. (Ord. 02-26) (Ord. 08-07)

(B) Standards: The following restriction shall apply to any home occupation: (Ord. 10-02)

1. A home occupation shall not be permitted if it changes the outside appearance of the dwelling. No modifications shall be made to expressly accommodate the commercial use in the home. (Ord. 08-07)

2. The home occupation may include the sale of commodities; however, the business should deliver products to customers. The occupation may also include the retail sale of products and services at the home with a maximum of two (2) customers per hour. The business owner may increase the number of customers or patrons approved to come to the home per hour by providing sufficient off-street parking and ensuring the home occupation does not adversely affect the neighborhood.

3. The area of the home devoted to the home occupation and/or storage of stock in trade shall not occupy more than thirty (30) percent of the area of any one floor. Child care may use a larger percentage of the home.

4. The home occupation shall not involve the use of any yard space or activity outside the residence, except where the use or activity is of the type customarily found in the residential neighborhood and where said use or activity does not adversely impact the residential nature of the neighborhood.

5. The home occupation may store inventory or supplies within the garage or an accessory building as long as the garage still functions for parking as many vehicles as specified at the time of construction. The home occupation shall not store outside any type of material used for the business.

6. No display of merchandise or advertising shall be visible from the street or neighboring properties except as permitted in Section 10-9-050 of the City's Sign Ordinance. (Ord. 10-02)

7. Residents may have one occupational vehicle and trailer, associated with the home occupation, that does not exceed ten thousand (10,000) pounds gross vehicle weight for minor home occupations and twenty thousand (20,000) pounds gross vehicle weight for major home occupations, on site provided they park said vehicles off the street, in compliance with residential off-street parking standards, and not on any street adjacent to or near their premises. By way of illustration and not limitation, this Subsection prohibits the storage or parking of business vehicles, such as limousines, service or work vehicles (snowplows, landscape and maintenance trucks, etc.), and similar vehicles as well as delivery and contractor's vehicles, equipment, trailers used to transport same. Business owners may not intentionally station, position, or park an occupational vehicle or trailer in any manner on private property so as to advertise, promote, or draw attention to products, services, events, or other similar purposes at the home owner's residence while parked thereon. (Ord. 08-07) (Ord. 08-11) (Ord. 11-02)

8. The home occupation shall not allow employees, other than those living in the dwelling, to come to work at the home or to park vehicles at the home to go to a job site. The only exception is that one (1) additional person may be employed as a second adult for a daycare, secretary, apprentice, or assistant where there are no more than five (5) family members actively engaged in the home occupation. An additional off-street parking space shall be provided. (Ord. 08-11) (Ord. 10-02)

9. The home occupation shall generate no greater vehicular traffic or parking than commonly associated with the neighborhood wherein the applicant(s) will conduct business, i.e., heavy trucks, delivery, or similar vehicles, etc. The business shall limit vehicular parking to those living at the dwelling.

10. A home occupation shall not store explosive or combustible materials anywhere on the premises. The home occupation shall not unreasonably disturb the peace and quiet of the neighborhood, including but not limited to interference of radio, television, or other electronic reception, by reason of design, materials, construction,

lighting, odor, dust, sounds, noise, vibrations, vehicles, parking, and general operation of the business.

11. Home occupations shall not hold promotional meetings, for the purpose of selling merchandise or taking orders, more than once per month.

12. Home occupations shall not hold garage, basement, yard, or other similar sales more than four (4) times each year, and each sale shall not last more than seventy-two (72) hours.

13. There shall be complete conformity with all City and State codes including fire, building, plumbing, electrical and health codes, and business-license regulations. Appropriate departments will conduct any periodic inspections required by these codes.

14. The home occupation shall not create a demand for municipal or utility services or community facilities in excess of those usually and customarily provided for residential uses.

15. The home occupation shall not involve the installation of any equipment, fixtures, plumbing, or electrical wiring that is incompatible with a residential area by reason of excessive noise, utility usage, waste production or broadcast interruption, etc.

16. The Land Use Authority may review and revoke any home occupation license upon a finding of noncompliance with this Section. Inspections by the City may occur as necessary to assure conformance with these regulations. (Ord. 08-07)

17. Disabled individuals can obtain a waiver through the Land Use Administrator to allow such persons to become self sufficient. (Ord. 08-07)

18. The City may place additional restrictions on a home occupation relating to hours of operation, parking, traffic or other matters as it deems necessary to mitigate impacts on the neighborhood and the City in general. (Ord. 10-02)

19. A permit for a home occupation is valid for only the original applicant and is not transferable to any resident, address, or any other occupation. Upon termination of the applicant's residency, the home occupation permit shall become null and void. (Ord. 10-02)

(C) Minor Home Occupations:

This Section shall deem businesses conducted on residential properties, which meet the standards outlined above, as Minor Home Occupations. The Land Use Administrator shall review and approve all Minor Home Occupations. The Land Use Administrator may refer a home occupation application to the Planning Commission for the imposition of additional requirements as deemed necessary in order to mitigate potential negative impacts on surrounding property owners. (Ord. 10-02)

Minor Home Occupations shall include, but are not limited to, the following:

1. Advertisement Services.

2. Artist, authors, architectural services

3. Barber shops and beauty shops

4. Consulting services, craft sales

5. Dance studio, aerobic exercise, music lessons, tutoring

6. Daycare, where the number of children equals eight (8) or less.

7. Direct sales distribution

8. Data processing, computer programming

9. Garden produce

10. Health and Fitness (such as personal trainers, diet and weight loss supplements).

11. Home crafts.

12. Insurance sales or broker, interior design

13. Janitorial

14. Mail order (not including retail sales from site)

15. Preschool, where the number of sessions equals four (4) or less.

16. Real estate sales or broker

17. Sales representative

18. Swimming Lessons

(D) Major Home Occupations:

1. The definition of a major home occupation shall include any business within a residential zone that meets the standards listed in Section 10-7-040(B) above but requires additional conditions of approval imposed by the Land Use Authority, as provided herein, to mitigate the increased impact of such home occupations on the surrounding property owners. (Ord. 10-02)

   Major home occupations shall be conditional uses in all residential zones due to the potential increase in the impact of the business as allowed by the following. (Ord. 10-02) (Ord. 11-02)

   (a) A larger commercial vehicle not exceeding twenty thousand (20,000) pounds may be used, provided it is parked on private property and adequately screened. Parking of the commercial vehicle shall occur on the side or in the rear of the home. (Ord. 10-02)

   (b) Daycare, where the number of children is greater than eight (8) and a second employee is required at the home. (Ord. 10-02)

(c) Preschools, where the number of sessions is greater than four (4) per week. (Ord. 10-02)

(d) A larger percentage of the home or an accessory building may be used for the home occupation under conditions recommended by the Planning Commission. The use of an accessory structure or an attached or detached garage, or yard space, for a home occupation may be considered as a conditional use only under the following conditions. (Ord. 10-02)

i. The Planning Commission finds that the proposed home occupation will be clearly accessory and subordinate to the principal use of the property for dwelling purposes; and (Ord. 10-02)

ii. The Planning Commission finds that the proposed home occupation will not adversely affect the residential nature and aesthetic quality of the neighborhood; and (Ord. 10-02)

iii. Any off-street parking displaced by the home occupation is relocated elsewhere on the lot or parcel in compliance with setback standards for the zoning in which the property is located; and (Ord. 10-02)

iv. The Planning Commission may impose any conditions it deems necessary to mitigate impacts of the home occupation on the neighborhood; (Ord. 10-02)

2. Major home occupations may include, but are not necessarily limited to the following: (Ord. 10-02)

(a) Any use allowed as a minor home occupation that is requiring additional conditions of approval as shown in Section 10-7-040(D)1. (Ord. 10-02)

(b) Small engine repairs (excluding automobiles, motorcycles, and snowmobiles. (Ord. 10-02)

(c) Woodworking (Ord. 10-02)

(d) Gun repair. (Ord. 10-02)

(e) Pest or weed control service. (Ord. 10-02)

3. The following uses, by the nature of the investment or operation, have a pronounced tendency once started to increase beyond the limits permitted for home occupations and thereby impair the use and value of a residentially zoned area for residential purposes and are more suited to professional or business districts. Therefore, the uses specified below shall not be permitted as home occupations: (Ord. 10-02)

(a) Minor or major auto repair, painting of vehicles, trailers, or boats: (Ord. 10-02)

(b) Funeral chapel or home; (Ord. 10-02)

(c) Gift shops; (Ord. 10-02)

(d) Medical or dental clinic; (Ord. 10-02)

(e) Welding or machine shops; and (Ord. 10-02)

(f) Appliance repair (large). (Ord. 10-02)

(E) Child Day Care Home Occupations: shall limit the number of children at the residence to eight (8) unless a second adult works for the home occupation, in which case the daycare shall limit the number of children at the residence to sixteen (16).

1. All daycare home occupations shall have a back yard fully enclosed with a secure fence.

2. All daycare home occupations shall acquire a license from the Utah Department of Health Bureau of licensing requirements. (Ord. 06-27)

3. Any person residing within the dwelling or employed from out of the dwelling shall not have a conviction of any crime, identified in Utah State Code 77-27-21.5(1)(e)(i), or any other sexual crime against another person. Employees and everyone eighteen (18) years of age or older in the household shall provide a criminal background clearance through the Utah Bureau of Criminal Investigation prior to any contact with the children attending such daycares. (Ord. 06-27) (Ord. 08-07)

(F) Adult Day Care Home Occupations: shall limit the number of adults at the residence to six (6) at only one (1) time. The following standards shall apply: (Ord. 10-02)

1. The adult day care must be operated by a person who resides in the single family dwelling. (Ord. 10-02)

2. An adult day care participant, who is not mentally or physically capable of negotiation a normal path to safety, shall count as three persons. The City may request a statement from a physician that a participant is mentally and physically capable of negotiation a normal path to safety. (Ord. 10-02)

3. An off-street, unobstructed, paved parking area for the pickup and drop off of adults must be provided. (Ord. 10-02)

4. When assistive devices or aids are necessary for an adult day care participant to negotiate a normal path to safety, the adult day care shall be handicap accessible. (Ord. 10-02)

5. The rear yard shall be fully enclosed with a secure fence at least sixty (60) inches in height. (Ord. 10-02)

6. The adult day care must be licensed by the State of Utah and continuously maintain a current license with the State as outlined in State Administrative Code R501-13. (Ord. 10-02)

(G) Preschool Home Occupations: Home preschools shall have back yards fully enclosed with secure fencing and shall limit the number of students to sixteen (16) children per session. (Ord. 08-07) (Ord. 10-02)

10-7-050: TEMPORARY COMMERCIAL USES. (Ord. 11-10)

(A) Purpose. The enactment of this Section is to accommodate certain uses that are temporary or seasonal in nature. Subject to the provisions of this Section, the Land Use Administrator or designee may issue a temporary business license for the time period designated for each use, subject to the findings that the commercial use is not a health or safety hazard and conforms to relevant portions of all Syracuse City Ordinances.

(B) Application and Review. The procedure for applying for a temporary business license shall be as follows:

1. Submission of a completed temporary business license application and applicable fee, along with the following:

   (a) Site plan drawing with dimensions and locations of any existing structures on the property as well as property dimensions and setbacks, all existing driveways, landscaping, and parking stalls associated with the site;

   (b) Written authorization from property owner;

   (c) Proposed signage associated with the use in conformance with Chapter 9 of this Title;

   (d) Explanation of sanitary facilities to service the site;

   (e) Bonding/insurance requirements if applicable; and

   (f) Any other required information as requested by the Land Use Administrator.

2. The Land Use Administrator shall review the temporary use permit application for compliance with general standards and applicable regulations set forth in subsections (C) and (D) of this Section and shall approve, conditionally approve, or deny the application within ten (10) working days.

3. Any person aggrieved or affected by a decision of the Land Use Administrator in denying a temporary business license may appeal to the Planning Commission in writing within ten (10) days after receiving notice of the decision and according to Section 10-4-120 in this Title. The decision of the Planning Commission shall be final.

(C) General Standards. All temporary commercial uses shall meet the following requirements:

1. The applicant shall locate, operate, and maintain the use in a manner consistent with the policies of the General Plan and all applicable provisions of City Ordinances and State law.

2. The proposed site shall be adequate in size and shape to accommodate the use.

3. The proposed site shall be adequately served by streets having sufficient width and improvements to accommodate the kind and quantity of traffic the use could reasonably generate.

4. The proposed site, or compliant alternate off site, shall provide adequate parking to accommodate vehicular traffic anticipated by the use.

5. The operation of the use at its proposed location during the requested time period shall not jeopardize, endanger, or otherwise constitute a menace to public health, safety, or general welfare.

6. The applicant shall not make any permanent alterations to the site without the required approvals.

7. Applicants shall not install permanent signs and shall remove all approved temporary signs associated with the use at the conclusion of said use.

8. None of the regulations in this Section shall exempt the applicant or operator from any other required permits, such as health department permits.

9. The applicant shall ensure clean-up and necessary restoration work in a timely manner, returning the proposed site to the original condition upon completion of the temporary use.

10. Nothing in this Section shall prohibit City sponsored seasonal events, which could be considered temporary commercial uses, if they receive approval by the City Council.

(D) Specific Regulations.

1. Christmas Tree Sales Lots. Allowed in all professional-office, commercial, and industrial zones, the display of Christmas trees need not comply with setback requirements of said zones. However, licensees shall not locate any tree within clear-view areas. The temporary business license shall be valid for a forty-five (45) day time period.

2. Fireworks Sales. Allowed in any professional-office, commercial, or industrial zone from temporary stands or trailers, the sale of fireworks shall be subject to the requirements of Title 7, Health and Fire, of the City Ordinances.

3. Fast-Food Huts. Temporary uses in structures less than one hundred (100) square feet for the retail sale of food items, such as shaved ice, snow cones, hot dogs, tacos, soft drinks, etc., shall be allowed in any zone where fast-food establishments are a permitted use and in City parks. The temporary business license shall be valid for six (6) months. These temporary uses selling items for human consumption on site shall be subject to all Health-Department regulations.

4. Garage, Yard, House, or Apartment Sales. Allowed in all zones, as a permitted use, without a temporary business license, property owners shall limit events to three (3) consecutive days and no more than four (4) events from the same property in any twelve- (12) month period. If located within a commercial zone, the event organizer shall provide the

City with written authorization from property owner and acquire written approval from the Land Use Administrator or designee.

5. Large-Scale Special Events, Such as Carnivals, Concerts, and Circuses, including but not limited to Outdoor Entertainment and Similar Events. Allowed in all zones, such events may be ongoing on any single property for up to a maximum of thirty (30) days within a calendar year, with no more than three (3) non-consecutive separate events up to a maximum of fifteen (15) days per each event. In authorizing an application for a large-scale event, the Land Use Administrator or designee shall include as conditions of approval the following minimum provisions:

   (a) Applicant shall limit the use to the dates and times, nature, and extent prescribed by the Land Use Administrator.

   (b) Applicant shall provide for fire protection and emergency-vehicle access as prescribed by the Fire Chief.

   (c) Applicant shall provide adequate numbers of trash receptacles on site, have them emptied at reasonable intervals at applicant's expense, and clean and restore event site to its original condition, or better, at the conclusion of the approved time period.

   (d) Applicant shall observe all applicable laws and ordinances, including but not be limited to the construction, equipment used, plumbing, mechanical, electrical, and all other respects.

   (e) Operators of any temporary food concessions shall also acquire applicable licenses and permits from the Davis County Health Department pursuant to local ordinances and State laws.

   (f) Applicant shall provide access to adequate sanitary and medical facilities for all on-duty personnel.

   (g) Applicant shall obtain and secure liability insurance to cover all activities prior to issuance of a temporary business license.

   (h) Applicant shall comply with all additional limitations or conditions as required by the Land Use Administrator.

   (i) Applicant may request a one-time 30-day extension subject to approval of Land Use Administrator or designee.

6. Outdoor Traveling Retail Sales, such as Sales of Tools, Housewares, Rugs, Toys, Spas, or other Manufactured Goods along with Retail Services. Allowed in all professional office, commercial, and industrial zones, such events may last up to a maximum of thirty (30) days, including set up and take down of facilities.

7. Sale of Motorized Vehicles. Allowed in any professional office, commercial, and industrial zones where auto sales are a permitted use, applicants shall limit such sales events to no more than three (3) per calendar year that last no more than three (3) consecutive days each at any location.

8. Seasonal Produce Sales. Property owners may operate such sales in all zones as a permitted use without a temporary business license from June through October, subject to compliance with all other requirements of City Ordinances.

CHAPTER 8

OFF STREET PARKING

10-8-010: Purpose

10-8-020: Effect of Chapter

10-8-030: General Provisions

10-8-040: Minimum and Maximum Parking Spaces

10-8-050: Off-Street Loading

10-8-060: Access to Off-Street Parking and Loading Spaces

10-8-070: Parking Development, Standards, and Maintenance

10-8-080: Other Parking Provisions

10-8-010: PURPOSE. The purpose of this Chapter is to provide regulations for off-street parking and loading and sufficient access to such facilities for each type of land use so as to reduce street congestion and traffic hazards and prevent the need to park on public streets. (1991)

10-8-020: EFFECT OF CHAPTER. The regulations as contained in this Chapter shall apply and govern in all zones. (1991)

10-8-030: GENERAL PROVISIONS. Off-street parking shall comply with the following requirements:

(A) Off-Street Parking Space Required. Any use of land or main building or structure in the City shall provide sufficient off-street parking spaces, as outlined in this Chapter, along with adequate provisions for ingress and egress by standard-size automobiles and adequate loading facilities at the time anyone establishes a use or erects a building. (Ord. 08-07)

(B) Location of Off-Street Parking. Parking areas, as required by this Chapter, shall be hard surfaces located on the same lot as the main building or structure. However, in cases other than a dwelling where, due to size or location, the land owner cannot provide the required parking on-site, they may provide such parking on other property not more than three hundred (300) feet from the nearest point of the main parcel, provided the off-site location would not require persons to cross a public street. (Ord. 08-07)

(C) Prohibited Locations. It shall be unlawful to park a motor vehicle, trailer, or boat in a front yard area, as defined in Section 10-2-040, on any residential property or on areas not improved for parking. No one shall develop any portion of a front yard, as required in this Title, as a public parking area in conjunction with a permitted multi-family, commercial, or industrial use. No one shall pave or improve any portion of a required front yard, other than driveways leading directly to or adjacent to a garage, so as to encourage or make possible the parking of vehicles therein. Residents may use paved driveways leading directly to or adjacent to a garage as an approved parking area for additional vehicles to meet the requirements of this Chapter. (Ord. 09-10)

All vehicles on the property shall be licensed and operable. The owner of any vehicle that has been inoperable or unlicensed for longer than four (4) months

shall remove said vehicle from the property or store it in a completely enclosed structure, including any and all vehicle parts. If a vehicle is under restoration, the vehicle owner shall possess a current and valid Restoration Permit from the City Community Development Department. Restoration Permits shall expire one (1) year from the date of issuance and no individual may have more than two (2) Restoration Permits at any time. (Ord. 08-07)

(D) No Parking Reduction. No one shall reduce the number or size of parking stalls needed for off-street parking in connection with an existing building nor utilize the same for any purpose other than for off-street parking and shall maintain the space in perpetuity as long as the requirement for said off-street parking is necessary.

(E) Tandem Parking. This Chapter prohibits tandem parking except for single- and two- (2) family dwellings. In this case, the parking space may be within the driveway area in the required front yard.

(F) Enlargements. Change of Use, Etc. No one shall enlarge, alter, convert, or change the use of a building or structure unless they provide, and thereafter maintain for such building and its use, a minimum number of parking spaces as hereinafter required. However, if such alteration, enlargement, conversion, or change does not increase the number of required parking spaces by more than fifteen (15) percent, then no additional parking spaces need be provided.

(G) Uses Not Mentioned. In the case of a use not specifically mentioned herein, the requirements for the most similar use so mentioned, as decided by the Land Use Authority, shall apply. (1991) (Ord. 08-07)

10-8-040: MINIMUM AND MAXIMUM PARKING SPACES. Each land use as listed below shall provide the required off-street parking. For any use not listed, the requirements for the most similar use listed shall apply. The Land Use Authority shall determine which listed use is most similar. In special cases where there is not a similar use, the Land Use Authority, in consultation with the developer, shall establish the minimum and maximum parking space requirement.

Any entity that conducts a business in or from a residence, or to which employees come to a residence for work, shall obtain site plan approval subject to the following condition: the site provides two (2) off-street parking spaces per single-family residence plus an additional half (.5) off-street parking space for every full-time, part-time, or contract employee or worker who visits the residence or provides services at the residence during an average week.

USES	Unit Measure	Min	Max
Single-family dwellings	Per dwelling unit	2	N/A
Two- (2) family dwellings	Per dwelling unit	2	N/A
Three- (3) family dwellings	Per dwelling unit	2	N/A
Four- (4) family dwellings	Per dwelling unit	1.5	N/A
Planned Residential Development (PRD) family dwellings	Per dwelling unit	2.5	N/A
Hotel and motel	Per room or suite	1	2
Intensive commercial businesses, stores, and shops	Per one thousand (1,000) square feet retail floor area	3	4.5
Less intensive commercial businesses, including autos, lumber, appliances, sales, etc.	Per one thousand (1,000) square feet retail floor area	1.5	2.5
Convenience stores, service stations, mini-marts	Per one thousand (1,000) gross square feet	2	3.5
Commercial recreation, such as	Per one thousand (1,000)	2	4.5

golf courses, bowling alleys, indoor soccer, etc.	square feet		
Daycares, preschools, and nursery schools	Per teacher, plus drop off loading area per seven (7) students	.5	2
Offices and personal services	Per one thousand (1,000) square feet floor area	2.5	3.5
Fast-Food or Drive-in restaurants, sit-Down restaurants, and bars	Per one hundred (100) square feet of dining area	1.5	3.5
Auditoriums, assembly halls, theaters, churches, and funeral homes	Per every five (5) seats	1	3.5
Dental and medical clinics	Per one thousand (1,000) square feet floor area	2.5	4.5
Hospitals	Per patient bed	1	2.5
Hospitals, Animal	Per animal	5	1
Nursing homes	Per every five (5) beds	1	1.5
Manufacturing uses, research, wholesale	Per one thousand (1,000) square feet floor area (excluding floor space used exclusively for storage)	1.25	3

(Ord. 06-17) (Ord. 11-02) (Ord. 11-04)

10-8-050: OFF-STREET LOADING

(A) Off-Street Loading Required. For every building or part thereof having a floor area of ten thousand (10,000) square feet or more which is to be occupied by a commercial or industrial use, to or from which deliveries are regularly made by motor vehicle, the property owner shall provide and maintain on the same lot with the building at least one (1) off-street loading space. In buildings larger than ten thousand (10,000) square feet, the property owner shall provide a second loading space for the next thirty thousand (30,000) square feet or fraction thereof plus one (1) additional loading space for each increment of forty thousand (40,000) square feet thereafter.

(B) Size of Off-street Loading Space. Each loading space shall be not less than fourteen (14) feet wide, twenty-five (25) feet long, and fourteen (14) feet high.

(C) Location of Loading Space. Required loading spaces may occupy any required yard except the front yard. The design and arrangement of the loading space shall be such that no part of the space would permit loading or unloading or service from a public street or sidewalk. No loading space shall be located closer than fifty (50) feet from a residential boundary except when screened by a six- (6) foot wall or solid fence. (Ord. 06-17)

10-8-060: ACCESS TO OFF-STREET PARKING AND LOADING SPACES.

(A) Ingress and Egress. All uses shall provide adequate ingress and egress as follows:

1. Residential driveway approaches shall have a maximum width of fifty (50) percent of the lot width. Measuring a driveway approach width shall be parallel with the street right-of-way boundary and at the trough of the cut. Property owners shall maintain a minimum five (5) feet of full height curbing between cuts. Where multiple cuts for frontages exist, the maximum of all cuts shall not exceed the total width allowed for the frontage of the lot. Where a proposed driveway approach and associated paving in the public right-of-way in asphalt, concrete or any other impervious surface will encase, cover or in any way come into

contact with any public utility located in the public right-of-way the property owner shall provide adequate expansion joints in the paving surface as to allow ease of access to such public utilities. In such cases where this situation exists, in addition to the required excavation permit, the property owner shall submit a design detail for protecting the allowed access of any utilities that may be affected by the proposed excavation work. (Ord. 08-07) (Ord. 11-04)

2. Commercial and industrial uses shall have a maximum of one (1) driveway approach for each one hundred (100) feet of public street frontage. Said driveway approaches shall be no more than thirty-five (35) feet in width nor less than sixteen (16) feet (for one-way traffic). Where a proposed driveway approach and associated paving in the public right-of-way in asphalt, concrete or any other impervious surface will encase, cover or in any way come into contact with any public utility located in the public right-of-way the property owner shall provide adequate expansion joints in the paving surface as to allow ease of access to such public utilities. In such cases where this situation exists, in addition to the required excavation permit, the property owner shall submit a design detail for protecting the allowed access of any utilities that may be affected by the proposed excavation work. (Ord. 08-07)

(B) Spacing. Driveway approaches shall not be located closer to each other than one hundred (100) feet in all commercial and industrial zones. (Ord. 08-07)

(C) Distance from Intersections. No residential driveway approach shall be located closer than twenty (20) feet to the intersection of two (2) streets. This measurement shall be made along the front property lines/street right-of-way lines to the point of intersection of the two (2) lines. For commercial and industrial uses and apartments with seventeen (17) or more parking spaces, the driveway approach shall be no closer than forty (40) feet to the intersection of two (2) streets.

10-8-070: PARKING DEVELOPMENT, STANDARDS, AND MAINTENANCE.

(A) Size. Each off-street parking space shall be no less than nine (9) feet by twenty (20) feet, except as otherwise provided.

(B) Small Car Parking Spaces. In all parking areas containing twenty-five (25) or more parking spaces, the developer may reduce the size of a maximum twenty-five (25) percent of the required parking spaces for use by small cars, except for residential uses where the property owner/manager assigns parking spaces to specific dwelling units. Small car parking spaces shall include signage clearly marking the stall as "Compact Only" or "Small Car Only" and shall be a minimum of nine (9) feet by fifteen (15) feet in dimension. (Ord. 08-07)

(C) Handicapped Parking. All buildings and uses on the site shall have appropriate means of access for disabled persons. Said access shall meet the requirements of the building code and all standards of the Americans with Disabilities Act shall be followed in order to provide safe and convenient access for the disabled. (Ord. 06-17) (Ord. 06-27)

(D) Surfacing. All public parking areas, private multi-family residential parking areas, with five (5) or more vehicles and private industrial parking areas with three (3) or more parking spaces (including driveways and loading spaces) shall have asphalt or concrete paving, appropriate bumper guards so cars do not project across sidewalks or property lines, and striping to provide the orderly arrangement and movement of vehicles. (Ord. 08-07)

(E) Drainage. All parking areas as described in Section 10-8-070(D) above shall have proper grading for drainage and provisions for curb, gutter, and waterways as submitted in an accepted site plan approved by the City Engineer. (Ord. 06-17)

(F) No Backing onto Public Streets. The design of all parking areas described in Section 10-8-070 shall eliminate the need for vehicles to back out into a public street. (Ord. 08-07)

(G) Screening and Landscaping. As a condition of approval at the site plan review stage, the Land Use Authority may require all public and private parking areas, except single- and two- (2) family dwellings, to have effective screening, such as fencing or landscaping. (Ord. 08-07)

(H) Lighting. The arrangement of lighting used to illuminate any off-street parking area shall reflect the light away from adjoining property in residential districts as per Chapter 8 of this Title. (Ord. 06-17)

(I) Design of Parking Area. All parking areas shall comply with the standards set forth in the Table of Parking Standards at the end of this Chapter.

10-8-080: OTHER PARKING PROVISIONS.

(A) Joint Use Parking Areas. When two (2) dissimilar uses are located next to each other and the demand for parking in conjunction with those uses would not conflict, the Planning Commission may authorize the use of such combined facilities requiring the maximum number of parking spaces for the larger use. A use may provide a shared parking area for similar adjacent uses as long as the total off-street parking spaces equal the minimum requirement for each individual use. If the common facilities are located on more than one lot, the developer must file a covenant, for the preservation of the parking facilities, with the City.

(B) Additional Off-Street Parking Areas. Additional off-street parking areas for common public use is required in residential zones and subdivisions where:

1. Street widths are at or less than thirty five (35) feet between the Top-Back-Of-Curb (TBC) on either side of the street, or;

2. Street widths are at or less than thirty (30) feet of pavement in areas without curb, measured from the edge of asphalt of concrete. The layout, spacing, and number of stalls shall be recommended by the City Engineer and approved by the Land Use Authority and shall include: (Ord. 09-10) (Ord. 09-09)

(a) A minimum of one stall for two dwelling units.

(b) A solid paved surface with proper dimensions, and painted markings.

(c) Properly designed drainage into a storm water collection system and shall be subject to the same storm water detention requirements as the entire subdivision.

(d) ADA accessibility incorporated into the design based upon the requirements of the entire subdivision.

(e) Any given dwelling unit may not be located greater than three hundred and fifty (350) feet in walking distance on paved surfaces from any parking area.

(f) A Home Owners Association (HOA) to maintain all public off-street parking areas within the subdivision. (Ord. 09-09)

TABLE OF PARKING STANDARDS
(Letters refer to the diagram below)

Parking Angle		45˚	60˚	90˚
Offset	A	18’	11’	3’
Car Space	B	12’	10’	9’
Stall Depth	C	17’	19’	20’
Stall Depth	D	19’	21’	22’
Overhang	E	2’	2.5’	3’
Driveway	F	14’	18’	26’
Turnaround	G	17’	14’	14’

(1991) (Ord. 08-07)

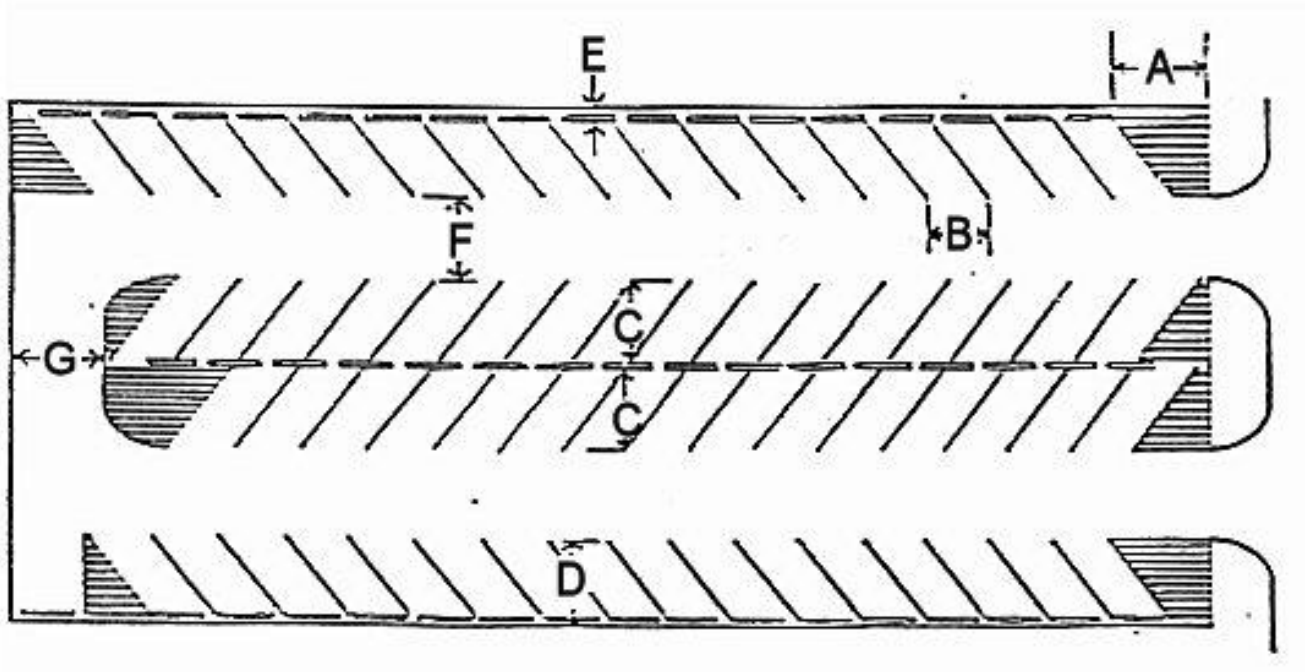

+

CHAPTER 9

SIGN AND LIGHTING REGULATIONS

10-9-010: Purpose

10-9-020: Effect of Chapter

10-9-030: Definitions and Specific Limitations

10-9-040: General Limitations

10-9-050: Location and Approval

10-9-060: Town Center Zone Restrictions

10-9-070: Professional Office Zone Restrictions

10-9-080: Enforcement

10-9-010: PURPOSE. The purposes of the sign regulations set forth in this Title shall be to allow a business to publicize in such a way as to eliminate potential hazards to motorists and pedestrians; encourage signs that, by their good design, are aesthetically pleasing and integrated with and harmonious to the buildings and sites they occupy and that eliminate excessive and confusing sign displays; preserve and improve the appearance of the City as a place in which to live and work and as an attraction to nonresidents who come to visit or trade; safeguard and enhance property values; protect public and private investment in buildings and open spaces; encourage strong business and commercial districts; supplement and be a part of the regulations imposed and the plan set forth under the Land Use Ordinance of the City of Syracuse; and promote the public health, safety, and general welfare. (Ord. 06-17)(Ord. 12-05)

It is also the intent of this Title to govern the number, size, type, location, and other provisions relating to signs within the various zones of the City as established and designated by the Land Use Ordinance of Syracuse City. (Ord. 06-17) (Ord. 09-10)(Ord. 12-05)

10-9-020: EFFECT OF CHAPTER. The regulations herein set forth shall apply and govern all zones as set forth in this Title. (Ord. 02-18)

10-9-030: DEFINITIONS AND SPECIFIC LIMITATIONS (Ord. 12-05). For the purpose of this Chapter, the definitions of the following words and terms are in addition to those stated in Chapter 2:

(A) **SIGN.** Any device attached to a structure or free standing, which passers by may view from out of doors that provide visual communication to the general public, including inflatable's, wind flags, and vehicle advertising, but not including any flag, badge, or ensign of any government or governmental agency. (Ord. 08-07)

(B) **SIGN, ADVERTISING.** Any sign that directs attention to a use, product, commodity, or service not related to the premises. (Ord. 09-16)

(C) **SIGN, IDENTIFICATION.** Any sign that directs attention to a use, product, commodity, or service related to the premises. (Ord. 09-16)

(D) **SIGN, ANIMATED.** A sign that uses mechanical or artificial means to create involved physical motion or rotation of any part. (Ord. 08-11) (Ord. 09-16)

(E) **SIGN, ELECTRONIC MESSAGE.** A sign with an electronic message or electronic image display. (Ord. 08-11)

(F) **SIGN, AREA.**
The area of a sign that is used for display purposes, excluding the frame and supports. In computing sign area, only one (1) side of a back-to-back or double-face sign covering the same subject shall be computed when the sign faces are parallel or diverge from a common edge by an angle of not more than thirty (30) degrees. In relation to signs that do not have a frame or a separate background or are of irregular shape, signs shall be measured on the basis of the least rectangle, triangle, or circle large enough to frame the advertisement. (Ord. 08-07)(Ord. 12-05)

(G) **SIGNS, LIGHTED TYPE.** A categorical rating given to a sign according to the type of illumination permitted as follows:

1. Direct Lighting. An illuminated sign, the light source of which is either a visible part of the sign or projects light upon the sign.

2. Indirect Lighting. An illuminated sign, the light source of which is not visible from any angle and is incorporated as part of the sign's structure.

(H) **SIGN, TYPE.** A categorical rating given to a sign according to its type of written message as follows:

1. Sign, Community Directory. Identification sign that serves as a directional guide to businesses or areas of community importance such as recreational or historical areas, City or State parks, public safety facilities, municipal services, schools, community development projects, or major business entities. Such signs are erected in the public right of way and are controlled, and maintained by the City. (Ord. 08-07)

2. Sign, Off-Premise. A permanent advertising sign that directs attention to a use, product, commodity, or service not related to the premises. The property owner shall apply for, own the sign, and have remaining square footage from their commercial building frontage calculation. If there is no commercial building frontage on the subject property, one (1) sign shall be allowed per one hundred fifty (150) feet of street frontage. The sign shall be for a registered Syracuse City business and no larger than thirty-two (32) square feet. Property owner is responsible for sign upkeep and maintenance. (Ord. 08-07) (Ord. 09-16)(Ord. 12-05)

3. Sign, On-Premise. A permanent advertising sign that directs attention to a use conducted, commodity sold, or service performed upon the premises. (Ord. 08-07) (Ord. 09-16)(Ord. 12-05)

4. Sign, Permanent. Any approved licensed engineered sign of a permanent nature. (Ord. 08-07)(Ord. 12-05)

5. Sign, Political. Informs the public of a candidate running for public office or an issue to be decided in a legal election by public vote.

6. Sign, Realty. Related to the property on which it is located and erected within the interior of the property boundaries for purposes of offering such property for sale or lease, advertising completed improvements,

announcing the name of the builder, owner, realtor, designer, or developer of the project, or warning against trespassing. (Ord. 08-07)

7. Sign, Seasonal Produce. Directs attention to produce or other agricultural products grown and sold on the premises, but may be displayed only during the season of the produce sold.

8. Sign, Subdivision. Advertisement of lots in a subdivision, for up to two (2) years At the expiration of two years, applicants may apply for one-(1) year extensions if they still own lots for sale in the subdivision. (Ord. 08-07) (Ord. 09-16)

9. Sign, Temporary. Any sign, banner, pennant, valance, or advertisement intended for display over a limited period of time no longer than thirty (30) days per any twelve (12) month period to advertise a business and/or special events, i.e., yard sales, promotions, etc. (Ord. 12-05)

10. Sign, Temporary Commercial Identification. Any sign, banner, or pennant temporarily affixed to a building for a period no longer than one hundred twenty (120) days to identify a business. (Ord. 12-05)

11. Sign, Window. Erected in, attached to, or painted or pasted on a window.

(I) **STRUCTURAL TYPE.** A categorical rating given to a sign according to its structure as follows:

1. Sign, Bench. Affixed or painted on any part of a bench or seat surface and placed outside the main structure on the property or adjacent to or on a right-of-way. Benches owned and maintained by a public transit authority are exempt from these regulations. (Ord. 06-27)(Ord. 12-05)

(a) As defined in this Section, bench signs shall not be located on publically-owned land inside street rights-of-way and must conform to the following regulations in order to be displayed in any General Commercial, Professional Office, Residential, or Industrial zone: (Ord. 08-07)(Ord. 12-05)

(i) The signs are displayed only at public transportation stops as designated by the City Planning Commission. The conditional use applicant shall provide notice to the public transportation entity of the applicant's intent to display bench signs near the public transportation stop site and shall provide evidence of such notice as part of the conditional use application.

(ii) No more than one bench sign may be displayed at a designated public transportation stop.

(iii) The square footage of the advertising on the bench sign shall not count against a business square footage limitation or the allowable signs per frontage. (Ord. 08-07)

(iv) Each bench sign must have a minimum setback of two (2) feet behind the public sidewalk or City rights-of-way, be located entirely on private property, and

maintain a distance of forty (40) feet from other detached signs.

(v) The sign company shall maintain a current business license.

(vi) The City reserves the right to remove any bench sign that is found to be in disrepair or illegally located within three (3) days after providing notice to the sign owner.

(vii) As part of the conditional use application, the applicant shall submit evidence of written permission from the property owner that expressly allows the applicant to place a bench sign on their premises. (Ord. 02-18) (Ord. 04-20) (Ord. 06-17) (Ord. 06-27) (Ord. 08-07)(Ord. 12-05)

2. Sign, Billboard. A sign, greater than thirty-two (32) square feet, and not owned by the party who pays for the message on the sign that is designed for changeable messages which advertise or direct attention to a business, commodity, service or entertainment conducted, sold or offered elsewhere than on the premises upon which the sign is located or to impart any message for a fee. The billboard sign may be owned by a commercial company which leases or rents the billboard space for advertising purposes. (Ord. 09-09)(Ord. 12-05

Billboard signs shall not be permitted in any zone within the City. (Ord. 09-09)(Ord. 12-05)

3. Sign, Flat. A sign erected parallel to and attached to, or painted or pasted on, the outside wall or roof of a building and projecting not more than eighteen (18) inches from such wall or roof. (Ord. 12-05)

4. Sign, Mobile. A sign mounted on trailer, frame, or other mobile structure, lighted or unlighted, which is not permanently attached to a structure or the ground. All mobile signs are considered temporary. (Ord. 12-05)

5. Sign, Monument. A sign placed upon the ground with no clearance between the bottom edge of the sign and the ground and not to exceed a maximum height of six (6) feet. Monument signs shall include a combination of brick, stone, ceramic tile, masonry materials, or wood fiber/composite siding and designed as to be architecturally compatible with the design theme of the commercial development where the sign is to be located. Signs with exposed cinder block are not permitted. Total signage, excluding sign support structure, shall not exceed forty eight (48) square feet in area. Each monument sign within a commercial parcel must be separated from any other detached sign by a minimum of one hundred and fifty (150) feet and may not be located within fifteen (15) feet of any adjacent shared private property line (Ord. 08-07) (Ord. 09-02)(Ord. 12-05)

6. Sign, Multi-tenant Pole or Pylon. Attached to or supported by one (1) or more poles or a pilaster or similar structure that the ground supports. Pole or pylon signs shall include a combination of brick, stone, ceramic tile, masonry materials, or wood fiber/composite siding and designed as to be architecturally compatible with the design theme of the commercial development where the sign is to be located. Signs with exposed cinder block are not permitted. Total signage, excluding sign support structure, shall not exceed three-hundred (300) square feet in

area. Each multi-tenant pole or pylon sign within a commercial parcel must be separated from any other detached sign by a minimum of one hundred and fifty (150) feet and may not be located within thirty (30) feet of any adjacent shared private property line. (Ord. 08-07) (Ord. 08-11) (Ord. 09-02) (Ord. 11-02) (Ord. 12-05)

Freestanding Pole or Pylon Signs shall not exceed twenty five (25) feet in height. The bottom of such signs shall be no less than ten (10) feet from the ground, but in no case shall they create a traffic hazard. The height of pole or pylon signs shall be measured from the top of the curb adjacent the nearest public street or nearest public street pavement to the top of the highest point on the sign or sign structure. (Ord. 08-07) (Ord. 08-11)(Ord. 12-05)

7. Sign, Post. Freestanding and supported by one or more posts or similar structure that the ground supports. This signage may be temporary or permanent with a signage area not exceeding a total of thirty two (32) square feet. This sign may be for Advertising or Identification. Maximum height of this sign shall be eight (8) feet from the ground to the top edge of the structure. The sign must not obstruct the clear view area as described in Chapter 10-6-060 of this Title. (Ord. 12-05)

8. Sign, Projecting. Attached to a building and extending, in whole or in part, more than twelve (12) inches beyond any wall of the building without the aid of any other vertical supports, including any such sign that also rests on or overlaps the roof twelve (12) inches or more. (Ord. 12-05)

9. Sign, Roof. Signs erected partially or wholly on or over the roof of a building, rest on or overlap a roof twelve (12) inches or less, or painted on or designed as a part of the roofing materials. (Ord. 12-05)

10. Sign, Single-tenant Pole or Pylon. Attached to or supported by one (1) or more poles or a pilaster or similar structure that the ground supports. Pole or pylon signs shall include a combination of brick, stone, ceramic tile, masonry materials, or wood fiber/composite siding and designed as to be architecturally compatible with the design theme of the commercial development where the sign is to be located. Signs with exposed cinder block are not permitted. Total signage, excluding sign support structure, shall not exceed one-hundred and fifty (150) square feet in area. Each single-tenant pole or pylon sign within a commercial parcel must be separated from any other detached sign by a minimum of one hundred and fifty (150) feet and may not be located within thirty (30) feet of any adjacent shared private property line. (Ord. 12-05)

Freestanding Pole or Pylon Signs shall not exceed twenty five (25) feet in height. The bottom of such signs shall be no less than ten (10) feet from the ground, but in no case shall they create a traffic hazard. The height of pole or pylon signs shall be measured from the top of the curb adjacent the nearest public street or nearest public street pavement to the top of the highest point on the sign or sign structure. (Ord. 12-05)

10-9-040: GENERAL LIMITATIONS. The following provisions affect signs in all zones. No one shall erect, replace, or reconstruct, maintain, enlarge, or move a sign to a new location unless it complies with all the following conditions:

(A) Allowable Area. Sign areas shall not exceed the maximum sizes identified in the 'LOCATION AND APPROVAL' table in this chapter. (Ord. 08-07) (Ord. 08-11)

(B) Clearance. Detached signs shall have a minimum clearance of ten (10) feet between the ground or sidewalk and any part of a projecting sign or pole sign, except where there is less than a twelve (12) inch projection from its support. (Ord. 08-07)(Ord. 12-05)

(C) Lights or Lighted Signs. No one shall install a spot light, flood light, or any type of lighted or animated sign, or otherwise permit such lights to continue in operation, where the rays of such light penetrate beyond the property on which the light is located in a manner constituting a nuisance or hazard. All signs are subject to approval by the Land Use Administrator. (Ord. 08-07) (Ord. 09-02)(Ord. 12-05)

(D) Lights and Signs Prohibited on Public Property. No sign, light standard, or pole shall be erected on publicly-owned land inside street rights-of-way, or otherwise. No sign, handbill, poster, advertisement, or notice of any kind or sort, whether political or otherwise, shall be fastened, placed, posted, painted, or attached in any way in or upon any curbstone, lamppost, telephone pole, telegraph pole, electric light or power pole, hydrant, bridge, tree, rock, sidewalk, or street right of way. (Ord. 06-17)

Exceptions: Signs and lights owned and erected by a public agency or its authorized representative are exempt from this Subsection. (Ord. 08-07)

(E) Maintenance. Every sign shall be kept in good condition as to maintenance and repair. The Land Use Administrator may require owners of dilapidated and/or unsafe signs to renovate such signs. Upon failure of the owner to do so within fifteen (15) days of receiving written notice, the City may order the removal or demolition of such signs. (Ord. 12-05)

(F) Multiple Signs. Signs on the same lot shall be located at least one hundred (100) feet from each other. (Ord. 08-07)(Ord. 12-05)

(G) Multi-tenant Signs. Lots in commercial subdivisions that contain more than one (1) commercial tenant shall be permitted one (1) detached multi-tenant sign per public street frontage. All multi-tenant signs shall be designed to be architecturally compatible with the design theme of the commercial development where the sign is to be located. Multitenant signs shall be located as per site plan review. (Ord. 08-11)(Ord. 12-05)

(H) Ownership. The identity of the manufacturer of all signs shall be in plain and public view. (Ord. 12-05)

(I) Political Signs. All zones shall allow political signs provided the signs comply with all subsections of this Section. (Ord. 10-10)(Ord. 12-05)

(J) Projection of Signs. No part of any sign shall be attached to any building or other structure or otherwise affixed in such a way that the sign projects across any property line.

(K) Signs and Lights not to Constitute Traffic Hazard. No light, sign, or other advertising structure, as regulated by this Chapter, shall be erected at the intersection of any street in such a manner as to violate the provisions of Section 10-6-060(B) or otherwise obstruct free and clear vision. Further no light sign or advertising structure shall be erected at any location where by reason of its position, shape, or color, it may interfere with, obstruct the view of,

or be confused with any authorized traffic signs, signal, or device or which makes use of the words "stop," "look," "drive-in," "danger," or other similar words, phrases, symbols, or characters in such manner as to interfere with, mislead, or confuse traffic. Signs along unimproved roadways may not be placed closer than twelve (12) feet to the edge of the paved surface. (Ord. 08-07)

(L) Electronic message signs shall be allowed in GC, C-2, Research Park, Industrial, Professional Office, and Town Center. These signs may be an attached or detached type. The square footage of these signs shall be counted into the maximum sign area described in this Title. The measured area of the electronic message sign may not exceed seventy (70) percent of the total area of the sign. These signs shall not cause glare or be rapid blinking, nor be so intensely lighted that they may create a nuisance or hazard to vehicular traffic, pedestrians or adjacent properties. These signs shall have a minimum of three (3) second intervals between complete screen changes. Any time an electronic message sign is operating between sunset and sunrise, said signs shall be set at not more than forty percent (40%) of the maximum capable light output. Any detached electronic message sign shall be placed perpendicular to the street onto which it is constructed. Electronic message signs may also be allowed with minor conditional use permits for all “Community Uses” in any zone, provided the sign shall not be located within two hundred feet (200') of any current or future residential use as designated in the City's General Plan, as measured from the base of the sign to the nearest point of the residential property. The Community Use must also have frontage on an arterial street as designated in the City's Master Street Plan. A Community Use shall be identified as but not limited to: (Ord. 08-11) (Ord. 11-02)(Ord. 12-05)

1. Schools
2. Churches
3. Libraries
4. Community buildings not used for any commercial purpose
5. Government buildings and/or government owned property

10-9-050: **LOCATION AND APPROVAL.** Signs allowed in any zone must comply with the regulations shown on the following table. No advertising sign in an agricultural or residential zone shall be displayed within six hundred sixty (660) feet, or one-eighth (1/8) mile from another sign of any type. However, notwithstanding the foregoing distance criteria, a property owner does have the right to erect one (1) sign on their parcel of property. (Ord. 08-07)(Ord. 12-05)

SIGN TYPE AND ZONE	MAXIMUM SIZE ALLOWED	APPROVAL REQUIRED
Off-Premise Permanent – Must be a Syracuse City Business (Ord. 12-05)		
Agriculture	Thirty-two (32) square feet	Minor Conditional use, Permanent signs require building permit
Commercial, Professional Office, and Industrial	The remainder of allowable sign area calculated using the corresponding On-Premise formula set forth below, not to exceed thirty-two (32) square feet	Minor Conditional Use, Permanent signs require a building permit
On-Premise Permanent		

Agriculture	Thirty-two (32) square feet	City Business License
Residential	Two (2) signs not to exceed four (4) square feet each	Minor Conditional Use, Permanent signs require a building permit
Commercial, Professional Office, and Industrial	Fifteen (15) percent of building's frontage (width x height) on primary side plus five (5) percent of frontage on the secondary side(s) of the building. Total square footage allotment shall not exceed three hundred (300) square feet and may be apportioned between attached and detached signs.	Site Plan; otherwise, Minor Conditional Use
Political		
All zones	Thirty-two (32) square feet – no limit on quantity	None required
Realty		
Agriculture, Commercial and Industrial	Thirty-two (32) square feet	Site Plan; otherwise, Minor Conditional Use
Residential	Thirty-two (32) square feet	No approval required
Seasonal Produce		
All Zones	Thirty-two (32) square feet	No approval required
Temporary		
All Zones. Limit thirty (30) days. If Temporary Commercial Identification sign type, then limit one hundred twenty (120) days.	Sixteen (16) square feet	No approval required
	One Hundred (100) square feet	Minor Conditional Use
Subdivision		
All Zones	Thirty-two (32) square feet	Final Plat; otherwise, Minor Conditional Use
Window		
Agriculture, Residential	Two (2) signs not to exceed four (4) square feet each	City Business License
Commercial, Industrial	Fifty (50) percent of window area	None required

(Ord. 03-08) (Ord. 06-27) (Ord. 08-07) (Ord. 08-11) (Ord. 09-02) (Ord. 09-10) (Ord. 09-16) (Ord. 11-02)(Ord. 12-05)

10-9-060: TOWN CENTER ZONE RESTRICTIONS. The following types of signs or sign components are prohibited within the Town Center Zone: (Ord. 08-07)(Ord. 12-05)

(A) Exposed neon (except as approved by the Land Use Authority), (Ord. 09-02)

(B) Painted lettering,

(C) Animated, flashing, or audible signs, or signs emitting smoke or other matter,

(D) Signs employing un-edged or uncapped letters with no returns and uncapped fastenings,

(E) Sign manufacturers' labels in a location that is visible to the public,

(F) Façade-mounted signs that extend above the roofline

10-9-070: PROFESSIONAL OFFICE ZONE RESTRICTIONS. The following types of signs or sign components are prohibited within the Professional Office Zone: (Ord. 08-07)(Ord. 12-05)

(A) Flags, pennants, streamers, or other decorative material used for commercial advertising purposes or to direct attention to a place of business

(B) Hot- or cold-air balloons, inflatable's, or spotlights directed into the night sky

(C) Flashing, running, scintillating, or similar lights or lighting, excessive light or glare or reflection from signs into pedestrian or traffic ways, or permitted animation or motion (Ord. 08-07)

(D) Portable signs or banners (Ord. 06-17)

10-9-080: ENFORCEMENT. The Land Use Administrator, or his authorized representative, shall be charged with the duty of enforcing this Chapter and, in the performance of such duty, the Administrator or his representative shall be empowered and directed to:

(A) Determine Conformance. To ascertain that the construction, reconstruction, or modification of all existing and proposed signs is conducted in conformance with the ordinances of Syracuse City. (Ord. 08-07)

(B) Legal Action. Institute any appropriate action or proceeding in any case involving a sign that is illegally erected, constructed, reconstructed, altered, repaired, converted, maintained or used in violation of any City Ordinance.

1. Issue Notices of Violations, Citations, and Information. The Land Use Administrator, or his designee, may issue a written notice of violation to the person having charge, control, or benefit of any sign found to be unsafe, dangerous, and illegal or in violation of this Code, particularly when the City is contemplating removal of said sign. Such official may also issue criminal citations and swear to information against violators. The City shall make reasonable effort to determine the owner of the sign and give notice of its removal either by personal contact via telephone or by mailing a written notice to the owner, if known. (Ord. 12-05)

2. Abate and Remove Unsafe or Dangerous Sign. If the person having charge, control, or benefit of an unsafe or dangerous sign does not repair or make safe said sign within fifteen (15) working days after receiving notice of violation, the Administrator or his designee may at once abate and remove the sign. A sign subject to removal is deemed to be a structure as defined in the International Building Code for the Abatement of Dangerous Buildings, and the Building Official may remove the sign pursuant to that Code, except that the City shall recover the cost of abatement pursuant to Title 10, Chapter 11, of the Utah Code Annotated. (Ord. 08-07)(Ord. 12-05)

3. Abate and Remove Illegal Signage. A sign located in a public right-of-way is a nuisance per se, and may be removed at any time without prior notice to the owner. City officials may remove illegal signs from public property, including City rights-of way, park property, or other City-maintained areas in violation of any provision of this Chapter. (Ord. 06-27) (Ord. 08-07)(Ord. 12-05)

   (a) Nothing in this Section shall apply to the installation of a metal plaque or plate or individual letters or figures in a sidewalk commemorating a cultural, historical, or artistic event, location, or personality.

   (b) Nothing in this Section shall apply to the painting of house numbers upon curbs.

   (c) Nothing in this Section shall apply to signs posted by the City or other similar public entity for the benefit of the public.

4. Enforcement Costs and Removal Fee. The person having charge or benefit of the unsafe, dangerous, or illegal sign shall pay to Syracuse City, within thirty (30) calendar days after mailing date of written notice, the costs associated with the removal and detention of such sign. The City Council will establish the enforcement and removal fee from time to time by resolution. (Ord. 06-27) (Ord. 08-07)(Ord. 12-05)

5. Impounded Signs. The owner, if known, shall be given fourteen (14) days from the date of notice to retrieve the sign from the City offices and pay costs of enforcement and removal. The City may dispose of signs not recovered within fourteen (14) days of impoundment, in any manner in which the City sees fit. (Ord. 06-27)(Ord. 12-05)

CHAPTER 10

ESTABLISHMENT OF ZONES

10-10-010: Establishment of Zones

10-10-020: Zoning of Territory Annexed Into the City

10-10-030: Requirements Declared As Minimums

10-10-040: The Zoning Map

10-10-050: Clarification of Zoning

10-10-010: ESTABLISHMENT OF ZONES. The City Council hereby divides the City into the following zones as shown on the map entitled "Syracuse City Zoning Map," which map and boundaries, notations, references, and other information shown thereon shall be as much a part of this Title as if the information and matters set forth by said map were all fully described herein.

A-1 Agriculture	Half a (.5) dwelling per net acre
R-1 Residential	Two and ninety hundredths (2.90) dwellings per net acre
R-2 Residential	Three and seventy-nine hundredths (3.79) dwellings per net acre
R-3 Residential	Five and forty-four hundredths (5.44) dwellings per net acre
R-4 Residential	Fourteen and fifty-two hundredths (14.52) dwellings per net acre
PRD Residential	Up To 8.0 Dwelling Units Per Net Acre; or up to 12.0 Dwelling Units Per Net Acre, subject to Recommendation by the Planning Commission and Approval by City Council.
PO Professional Office	
GC General Commercial	
C-2 Commercial	
NS Neighborhood Services	
BP Business Park	
RP Research Park	
ID Industrial Development	
SO Sensitive Overlay	

(Ord. 06-17) (Ord. 08-07) (Ord. 12-12) (Ord. 12-14)

10-10-020: ZONING OF TERRITORY ANNEXED INTO THE CITY. The City Council, with recommendations by Planning Commission, shall determine at the time of annexation the most appropriate zoning of all property hereafter annexed into Syracuse City. (Ord. 08-07)

10-10-030: REQUIREMENTS DECLARED AS MINIMUM. The City Council establishes the uses and regulations which apply to each zoning district in accordance with a General Plan designed for the same purposes for which the City Council enacted this Title and declares the requirements set forth herein to be the minimums necessary to accomplish the purposes of this Title. (Ord. 06-17) (Ord. 08-07)

10-10-040: THE ZONING MAP

(A) Zones. The location and boundaries of all zones described in this Chapter,

including subsequent amendments, shall be shown on an official zoning map, entitled City of Syracuse Official Zoning Map. The Official Zoning Map, including all boundaries, notations, and other data shown thereon, is hereby adopted by this reference as if set forth in its entirety. All territory within the City shall be subject to the land use restrictions set forth for such zones, as shown upon the Official Zoning Map. (Ord. 08-07)

(B) Amendments. Amendments to the boundaries of a specific zone shown on the Official Zoning Map shall be accomplished in accordance with the provisions set forth in Section 10-4-070 of this Title. (Ord. 08-07)

(C) Map Updates. The Community Development Department shall update the Official Zoning Map as soon as possible after amendments are adopted by the City Council. Upon entering any such amendment on the map, the Community Development Department shall note on the map the date of the revision. (Ord. 08-07)

(D) Historic Reference Copy. A print of each updated official zoning map shall be given to the City Recorder to be filed and kept for historical reference. (Ord. 08-07)

10-10-050: CLARIFICATION OF ZONING

(A) Ambiguous Zone Classification. Any property which, for any reason, is not clearly zoned on the City's official zone maps or is determined not to be subject to the requirements of a zone classification as provided by this Title is hereby declared to be in the Agricultural Zone, and shall be subject to the requirements of the Agricultural Zone. (Ord. 08-07)

(B) Ambiguous Use Classification. If ambiguity arises concerning the appropriate classification of a particular use within the meaning and intent of this Title, or with respect to matters of height, yard requirements, area requirements, or other property development standards, the Land Use Administrator shall determine the proper use or classification. (Ord. 08-07)

CHAPTER 11

A-1 AGRICULTURE
(.5 Lots Per Net Acre)

10-11-010: Purpose

10-11-020: Permitted Uses

10-11-030: Conditional Uses

10-11-040: Minimum Lot Standards

10-11-050: Off-Street Parking and Loading

10-11-060: Signs

10-11-070: Special Provisions

10-11-010: PURPOSE. The purpose of this Zone is to preserve agricultural open spaces within the City and, in some cases, to act as a holding zone until such time as it becomes appropriate to allow development.

10-11-020: PERMITTED USES. The following, and no others, are uses permitted by right provided the parcel and buildings meet all other provisions of this Title and any other applicable ordinances of Syracuse City. (Ord. 10-02)

(A) Accessory Uses and Buildings (under two hundred [200] square feet) (Ord. 03-18)

(B) Agriculture

(C) Animal Clinics and Hospitals (Ord. 11-02)

(D) Apiaries

(E) Aviaries

(F) Churches, Synagogues, and Temples

(G) Dwellings, Single-Family

(H) Educational Services

(I) Farm Animal Keeping {see Section 10-6-040}

(J) Farm Industry (on a parcel of five [5] acres or more)

(K) Fruit and Vegetable Stands

(L) Household Pets (Ord. 08-07)

(M) Minor Home Occupations (Ord. 10-02)

(N) Public Parks

(O) Rabbits and Hens (Ord. 08-07)

(P) Residential Facilities for Persons with Disabilities

(Q) Vietnamese Potbellied Pigs (Ord. 08-07)

10-11-030: CONDITIONAL USES. The following, and no others, may be conditional uses permitted after application and approval as specified in Section 10-4-080 of this Title. (Ord. 08-07) (Ord. 10-02)

(A) Accessory Uses and Buildings (two hundred [200] square feet or greater) [Minor] (Ord. 11-10)

(B) Cluster Subdivisions [Major] (Ord. 11-10)

(C) Day Care Centers [Major] (Ord. 11-10)

(D) Dog Kennels [Minor] (Ord. 11-10)

(E) Educational Services, Private [Minor] (Ord. 08-07) (Ord. 11-10)

(F) Greenhouses [Minor] (Ord. 11-10)

(G) Home Occupations [Major] (Ord. 10-02) (Ord. 11-10)

(H) Private Parks and Recreational Activities [Minor] (Ord. 11-10)

(I) Public and Quasi-Public Buildings [Major] (Ord. 11-10)

(J) Sewage Treatment Plants [Major] (Ord. 11-10)

(K) Stables, Public [Minor] (1991) (Ord. 11-10)

(L) Temporary Commercial Uses (see Section 10-7-050) [Minor] (Ord. 11-10)

10-11-040: MINIMUM LOT STANDARDS. Developers shall improve all lots and place all structures and uses on lots in accordance with the following lot standards. Lot areas for properties fronting existing streets shall include all property as described on the most recent plat of record. (Ord. 10-02)

(A)	Density:	Minimum lot size twenty-one thousand seven hundred eight (21,780) square feet, but in no case shall the density exceed five tenths (.5) lots per net acre, unless the Land Use Authority grants additional density, per a major conditional use permit, up to a maximum of two and five tenths (2.5) lots per net acre. (Ord. 11-13)
(B)	Front Yard:	Twenty-five (25) feet (Ord. 03-08)
(C)	Side Yards:	Ten (10) feet (both sides)
(D)	Rear Yard:	Thirty (30) feet (Ord. 03-08)
(E)	Building Height:	As allowed by the current building code (Ord. 02-16)
(F)	Lot Width:	One hundred (100) feet. However, the Land Use Authority may reduce the lot width requirement in particular cases

when a property owner provides evidence that they acquired the land in good faith and, by reason of size, shape, or other special condition(s) the requirement would effectively prohibit or unreasonably restrict the ability to subdivide the property or that a reduction of the lot width requirement would alleviate a clearly demonstrable hardship as distinguished from a special privilege sought by the applicant. The Land Use Authority shall approve no lot width reduction without a determination that: (Ord. 08-07) (Ord. 10-02)

1. The strict application of the lot width requirement would result in substantial hardship; (Ord. 08-07)

2. Adjacent properties do not share generally such a hardship and the property in question has unusual circumstances or conditions where literal enforcement of the requirements of the Zone would result in severe hardship; (Ord. 08-07)

3. The granting of such reduction would not be of substantial detriment to adjacent property or influence negatively upon the intent of the Zone; (Ord. 08-07)

4. The condition or situation of the property concerned or the intended use of the property is not of so general or recurring a nature as to detract from the intention or appearance of the Zone as identified in the City's General Plan. (Ord. 06-27) (Ord. 08-07)

10-11-050: OFF-STREET PARKING AND LOADING. Off-street parking and loading shall be provided as specified in Chapter 8 of this Title. (1991) (Ord. 08-07)

10-11-060: SIGNS. The signs permitted in this Zone shall be those allowed in agricultural zones pursuant to Chapter 9 of this Title. (1991) (Ord. 08-07)

10-11-070: SPECIAL PROVISIONS. All pens, corrals, barns, coops, stables, and other similar enclosing structures to keep animals or fowl shall be located no less than one hundred fifty (150) feet from a public street and no less than one hundred (100) feet from all dwellings on adjacent lots (This Provision shall not apply to pastures). (1991)

CHAPTER 12

R-1 RESIDENTIAL
(2.9 Lots Per Net Acre)

10-12-010: Purpose

10-12-020: Permitted Uses

10-12-030: Conditional Uses

10-12-040: Minimum Lot Standards

10-12-050: Off-Street Parking and Loading

10-12-060: Signs

10-12-070: Special Provisions

10-12-010: PURPOSE. The purpose of this Zone is to promote and preserve, where conditions are favorable, areas for large lot development for families to engage in food production and, where adequate lot area exists, keep a limited number of farm animals and fowl. (1991) (Ord. 06-17)

10-12-020: PERMITTED USES. The following, and no others, are uses permitted by right provided the parcel and/or building meet all other provisions of this Title and any other applicable ordinances of Syracuse City. (Ord. 10-02)

(A) Accessory Uses and Buildings (under two hundred [200] square feet)

(B) Agriculture

(C) Aviaries

(D) Churches, Synagogues, and Temples

(E) Dwellings, Single-Family

(F) Educational Services

(G) Farm Animal Keeping {see Section 10-6-040}

(H) Fruit and Vegetable Stands (for sale of products produced on owner's premises)

(I) Household Pets (Ord. 08-07)

(J) Minor Home Occupations (Ord. 10-02)

(K) Public and Quasi-Public Buildings

(L) Public Parks

(M) Rabbits and Hens (Ord. 08-07)

(N) Residential Facilities for Persons with Disabilities

(O) Vietnamese Potbellied Pigs (Ord. 08-07)

10-12-030: CONDITIONAL USES. The following, and no others, may be conditional uses permitted after application and approval as specified in Section 10-4-080 of this Title. (Ord. 08-07) (Ord. 10-02)

(A) Accessory Uses and Buildings (two hundred [200] square feet or greater) [Minor] (Ord. 11-10)

(B) Apiaries [Minor] (Ord. 11-10)

(C) Cluster Subdivisions [Major] (Ord. 11-13)

(D) Day-Care Centers [Major] (Ord. 11-10)

(E) Dog Kennels [Minor] (Ord. 11-10)

(F) Dwellings, Two- [2] Family [Major] (Ord. 11-10)

(G) Dwelling Groups [Major] (Ord. 11-10)

(H) Greenhouses [Minor] (Ord. 11-10)

(I) Home Occupations [Major] (Ord. 10-02) (Ord. 11-10)

(J) Private Parks and Recreational Activities [Minor] (Ord. 11-10)

(K) Temporary Commercial Uses (see Section 10-7-050) [Minor] (Ord. 11-10)

(L) Temporary Use of Buildings (See Section 10-6-100)(A)(9) [Minor] (Ord. 11-02)

(Ord. 11-10)

10-12-040: MINIMUM LOT STANDARDS. All lots shall be developed and all structures and uses shall be placed on lots in accordance with the following standards. Lot area for properties fronting existing streets shall include all property as described on the most recent plat of record.

(A)	Density:	Minimum lot size ten thousand (10,000) square feet, but in no case shall the density exceed two and ninety hundredths (2.90) lots per net acre, unless the Land Use Authority grants additional density, per a major conditional use permit, up to a maximum of four and seven and half tenths (4.75) lots per net acre. (Ord. 11-13)
(B)	Lot Width:	One hundred (100) feet
(C)	Front Yard:	Twenty-five (25) feet
(D)	Side Yards:	Ten (10) feet (both sides)
(E)	Rear Yard:	Thirty (30) feet
(F)	Building Height:	As allowed by current building code.
(G)	Variation of Lot:	The Land Use Authority may reduce the lot width requirement in particular cases when a property owner provides evidence they acquired the land in good faith

and, by reason of size, shape, or other special condition(s) of the specific property, application of the lot width requirement would effectively prohibit or unreasonably restrict the ability to subdivide the property or a reduction of the lot width requirement would alleviate a clearly demonstrable hardship as distinguished from a special privilege sought by the applicant. The Land Use Authority shall approve no lot width reduction without a determination that: (Ord. 08-07)

1. The strict application of the lot width requirement would result in substantial hardship;

2. Adjacent properties do not share generally such a hardship and the property in question has unusual circumstances or conditions where literal enforcement of the requirements of the Zone would result in severe hardship;

3. The granting of such reduction would not be of substantial detriment to adjacent property or influence negatively upon the intent of the Zone;

4. The condition or situation of the property concerned or the intended use of the property is not of so general or recurring a nature as to detract from the intention or appearance of the Zone as identified in the City's General Plan. (Ord. 06-27)

10-12-050: OFF-STREET PARKING AND LOADING. Off -street parking and loading shall be provided as specified in Chapter 8 of this Title. (Ord. 08-07)

10-12-060: SIGNS. The signs permitted in this Zone shall be those allowed in residential zones by Chapter 9 of this Title. (Ord. 08-07)

10-12-070: SPECIAL PROVISIONS. All pens, barns, coops, stables, and other similar enclosing structures to keep animals or fowl shall be located no less than one hundred fifty (150) feet from a public street and no less than one hundred (100) feet from all dwellings on adjacent lots. (This Provision shall not apply to pastures).

CHAPTER 13

R-2 RESIDENTIAL
(3.79 Lots Per Net Acre)

10-13-010: Purpose

10-13-020: Permitted Uses

10-13-030: Conditional Uses

10-13-040: Minimum Lot Standards

10-13-050: Off-Street Parking and Loading

10-13-060: Signs

10-13-010: PURPOSE. The purpose of this Zone is to provide for moderate density single-family residential development that conforms to the system of services available. (1997)

10-13-020: PERMITTED USES. The following, and no others, are uses permitted by right provided the parcel and building meet all other provisions of this Title and any other applicable ordinances of Syracuse City. (Ord. 10-02)

(A) Accessory Uses and Buildings (under two hundred [200] square feet) (Ord. 03-18)

(B) Agriculture

(C) Churches, Synagogues, and Temples

(D) Dwellings, Single-Family

(E) Educational Services

(F) Household Pets (Ord. 08-07)

(G) Minor Home Occupations (Ord. 10-02)

(H) Public and Quasi-Public Buildings

(I) Public Parks

(J) Rabbits and Hens (Ord. 08-07)

(K) Residential Facilities for Persons with Disabilities

(L) Vietnamese Potbellied Pigs (Ord. 08-07)

10-13-030: CONDITIONAL USES. The following, and no others, may be conditional uses permitted after application and approval as specified in Section 10-4-080 of this Title. (Ord. 08-07) (Ord. 10-02)

(A) Accessory Uses and Buildings (two hundred [200] square feet or greater) [Minor] (Ord 06-27) (Ord. 11-10)

(B) Apiaries (Ord. 11-04) [Minor] (Ord. 11-10)

(C) Day-Care Centers [Major] (Ord. 11-10)

(D) Dog Kennels (Ord. 06-27) [Minor] (Ord. 11-10)

(E) Dwellings, Two- [2] Family [Major] (Ord. 11-10)

(F) Dwelling Groups [Major] (Ord. 11-10)

(G) Home Occupations [Major] (Ord. 10-02) (Ord. 11-10)

(H) Temporary Commercial Uses (see Section 10-7-050) [Minor] (Ord. 11-10)

(I) Temporary Use of Buildings (see Section 10-6-100)(A)(9) [Minor] (Ord. 11-02) (Ord. 11-10)

10-13-040: MINIMUM LOT STANDARDS. All lots shall be developed and all structures and uses shall be placed on lots in accordance with the following standards:

(A)	Density:	Minimum lot size ten thousand (10,000) square feet, but in no case shall the density exceed three and seventy-nine hundredths (3.79) lots per net acre
(B)	Lot Width:	Eighty-five (85) feet
(C)	Front Yard:	Twenty-five (25) feet
(D)	Side Yards:	Eight (8) feet (both sides)
(E)	Rear Yard:	Thirty (30) feet
(F)	Building Height:	As allowed by current building code
(G)	Variation of Lot:	The Land Use Authority may reduce the lot width requirement in particular cases when a property owner provides evidence they acquired the land in good faith and, by reason of size, shape, or other special condition(s) of the specific property, application of the lot width requirement would effectively prohibit or unreasonably restrict the ability to subdivide the property or a reduction of the lot width requirement would alleviate a clearly demonstrable hardship as distinguished from a special privilege sought by the applicant. The Land Use Authority shall approve no lot width reduction without a determination that: (Ord. 08-07)

1. The strict application of the lot width requirement would result in substantial hardship;

2. Adjacent properties do not share generally such a hardship and the property in question has unusual circumstances or conditions where literal enforcement of the requirements of the Zone would result in severe hardship;

3. The granting of such reduction would not be of substantial detriment to adjacent property or influence negatively upon the intent of the Zone;

4. The condition or situation of the property concerned or the intended use of the property is not of so general or recurring a nature as to detract from the intention or appearance of the Zone as identified in the City's General Plan. (Ord. 06-27)

10-13-050: OFF-STREET PARKING AND LOADING. Off -street parking and loading shall be provided as specified in Chapter 8 of this Title (Ord. 08-07)

10-13-060: SIGNS. The signs permitted in this Zone shall be those allowed in residential zones by Chapter 9 of this Title. (Ord. 08-07)

CHAPTER 14

R- 3 RESIDENTIAL
(5.44 Lots Per Net Acre)

10-14-010: Purpose

10-14-020: Permitted Uses

10-14-030: Conditional Uses

10-14-040: Minimum Lot Standards

10-14-050: Off-Street Parking And Loading

10-14-060: Signs

10-14-010: PURPOSE. The purpose of this Zone is to provide for medium density single-family residential development that conforms to the system of services available. (Ord. 06-17) (Ord. 08-07)

10-14-020: PERMITTED USES. The following, and no others, are uses permitted by right provided the parcel and building meet all other provisions of this Title and any other applicable ordinances of Syracuse City.(1991) (Ord. 10-02)

(A) Accessory Uses and Buildings (under two hundred [200] square feet) (Ord. 03-18)

(B) Agriculture

(C) Churches, Synagogues, and Temples

(D) Dwellings, Single-Family

(E) Educational Services

(F) Household Pets (Ord. 08-07)

(G) Minor Home Occupations (Ord. 10-02)

(H) Public and Quasi-Public Buildings

(I) Public Parks

(J) Rabbits and Hens (Ord. 08-07)

(K) Residential Facilities for Persons with Disabilities (Ord 04-12)

(L) Vietnamese Potbellied Pigs (Ord. 08-07)

10-14-030: CONDITIONAL USES. The following, and no others, may be conditional uses permitted after application and approval as specified in Section 10-4-080 of this Title.(1991) (Ord. 08-07) (Ord. 10-02)

(A) Accessory Uses and Buildings (two hundred [200] square feet or greater) [Minor] (Ord. 11-10)

(B) Apiaries (Ord. 11-04) [Minor] (Ord. 11-10)

(C) Day-Care Centers [Major] (Ord. 11-10)

(D) Dwellings, Two- [2] Family [Major] (Ord. 11-10)

(E) Home Occupations [Major] (Ord. 10-02) (Ord. 11-10)

(F) Temporary Commercial Uses (see Section 10-7-050) [Minor] (Ord. 11-10)

(G) Temporary Use of Buildings (see Section 10-6-100)(A)(9) [Minor] (Ord. 11-02) (Ord. 11-10)

10-14-040: MINIMUM LOT STANDARDS. All lots shall be developed and all structures and uses shall be placed on lots in accordance with the following standards: (1998)

(A)	Density:	Minimum lot size eight thousand (8,000) square feet, but in no case shall the density exceed five and forty-four hundredths (5.44) lots per net acre.
(B)	Lot Width:	Eighty (80 feet)
(C)	Front Yard:	Twenty-five (25) feet
(D)	Side Yards:	Eight (8) feet both sides
(E)	Rear Yard:	Twenty (20) feet
(F)	Building Height:	As allowed by current adopted building code.
(G)	Variation of Lot:	The Land Use Authority may reduce the lot width requirement in particular cases when a property owner provides evidence they acquired the land in good faith and, by reason of size, shape, or other special condition(s) of the specific property, application of the lot width requirement would effectively prohibit or unreasonably restrict the ability to subdivide the property or a reduction of the lot width requirement would alleviate a clearly demonstrable hardship as distinguished from a special privilege sought by the applicant. The Land Use Authority shall approve no lot width reduction without a determination that: (Ord. 08-07)

1. The strict application of the lot width requirement would result in substantial hardship;

2. Adjacent properties do not share generally such a hardship and the property in question has unusual circumstances or conditions where literal enforcement of the requirements of the Zone would result in severe hardship;

3. The granting of such reduction would not be of substantial detriment to adjacent property or influence negatively upon the intent of the Zone;

4. The condition or situation of the property concerned or the intended use of the property is not of so general or recurring a nature as to detract from the intention or appearance of the Zone as identified in the City's General Plan. (Ord. 06-27)

10-14-050: OFF-STREET PARKING & LOADING. Off-street parking and loading shall be provided as specified in Chapter 8 of this Title. (1991) (Ord. 08-07)

10-14-060: SIGNS. The signs permitted in this Zone shall be those allowed in residential zones by Chapter 9 of this Title. (1991) (Ord. 08-07)

CHAPTER 15

(previous Chapter 15 (R-4 Zone) repealed by Ord. 11-05)

PRD - PLANNED RESIDENTIAL DEVELOPMENT (Up To 8.0 Dwelling Units Per Net Acre; or up to 12.0 Dwelling Units Per Net Acre, subject to Recommendation by the Planning Commission and Approval by City Council) (Ord. 11-04)

10-15-010: Purpose

10-15-020: Permitted Uses

10-15-030: Conditional Uses

10-15-040: Minimum Lot Standards

10-15-050: Development Plan and Agreement Requirements

10-15-060: Design Standards

10-15-070: Street Design

10-15-080: Off-Street Parking and Loading

10-15-090: Signs

10-15-010: PURPOSE. The purpose of this Zone is to allow diversification in the relationship of residential uses to their sites and permit directed flexibility of site design. Further, its intent is to encourage a more efficient use of the land and the reservation of a greater proportion of common space for recreational and visual use than other residential zones may provide and to encourage a variety of dwelling-units that allows imaginative concepts of neighborhood and housing options and provides variety in the physical development pattern of the City. This will allow the developer to more closely tailor a development project to a specific user group, such as retired persons.

The intent of this Zone is to encourage good neighborhood design while insuring compliance with the intent of the Subdivision and Zoning Ordinances. All dwelling units are to be held in private individual ownership. However, the development shall contain common or open space and amenities for the enjoyment of the planned community that are developed and maintained through an active home owner's association or similar organization with appointed management. (Ord. 06-17)

10-15-020: PERMITTED USES. The following are permitted uses by right provided the parcel and building meet all other provisions of this Title and any other applicable ordinances of Syracuse City

(A) Accessory Uses and Buildings (under two hundred [200] square feet)

(B) Churches, Synagogues, and Temples

(C) Dwelling Units, Single-Family (no more than four [4] units attached)

(D) Educational Services

(E) Household Pets (Ord. 08-07)

(F) Private Parks

(G) Public and Quasi-Public Buildings

(H**)** Residential Facilities for Persons with Disabilities and Assisted Living Centers (Ord 04-12) (Ord. 06-17)

10-15-030: CONDITIONAL USES. The following may be permitted conditional uses after approval as specified in Section 10-4-080 of this Title.(1991) (Ord. 08-07)

(A) Day-Care Centers [Major] (Ord. 11-10)

(B) Home Occupations [Minor or Major] (Ord. 11-10)

(C) Temporary Commercial Uses (see Section 10-7-050) [Minor] (Ord. 11-10)

(D) Temporary Use of Buildings (see Section 10-6-100)(A)(9) [Minor] (Ord. 11-02) (Ord. 11-10)

10-15-040: MINIMUM LOT STANDARDS. All lots shall be developed and all structures and uses shall be placed on lots in accordance with the following standards: (1998)

(A) Density: The City shall determine the dwelling-unit density, building setbacks, and minimum lot size through a development plan based on the specific merits of the proposed development as well as on factors such as recreation facilities, greater open space, landscaping features, fencing type and design, signage, clubhouse provisions, homeowner's' covenants, professional maintenance, trails/pathways, and quality of exterior-building materials. However, condominium developments shall comply with the Utah Condominium Act, but in no case shall the overall density of the development exceed eight (8) dwelling units per net acre, without recommendation for approval by the Planning Commission and the consent and approval of the City Council. (Ord. 08-07) (Ord. 11-04)

The overall density of the development may exceed eight (8) dwelling units per net acre and increase up to a maximum of twelve (12) dwelling units per net acre only after receiving recommendation for approval by the Planning Commission and consent and approval by the City Council. The Planning Commission recommendation and City Council consent and approval, for a developer to exceed eight (8) dwelling units per net acre, shall be subject to the ability of the development plan to meet the following criteria: (Ord. 11-04)

1. The development area shall be a transitional residential buffer to commercial, industrial, and/or retail zones, as established in the General Plan; (Ord. 11-04)

2. The development shall provide a standard road right-of-way of sixty feet (60') which shall include curb, gutter, and sidewalk improvements; (Ord. 11-04)

3. The development shall provide a minimum of thirty-five (35) percent parks and/or functional open space within

the development based on the net acreage of the proposed development; (Ord. 11-04)

4. The aesthetic and landscaping proposals shall provide a superior residential development and environment; (Ord. 11-04)

5. The development shall provide adequate off-street parking area(s), subject to requirements of this Chapter and off-street parking requirements as found in Chapter 8 of this title; and (Ord. 11-04)

6. The development design shall include a direct connection to a major arterial, minor arterial, or major collector roadway. (Ord. 11-04)

(B) Lot Width: Determined by development plan

(C) Front Yard: Twenty (20 feet) (Ord. 08-07)

(D) Side Yards: A minimum of sixteen (16) feet between attached units

(E) Rear Yard: A minimum of fifteen (15) feet (Ord. 08-07)

(F) Building Height: As allowed by current adopted building code, with a maximum height of thirty (30) feet to the top of the roof structure. (Ord. 08-07) (Ord. 12-01)

(G) Open Space: A minimum fifty (50) percent of the total land area, excluding roadways, buildings, and above-ground City infrastructure. (Ord. 08-07)

10-15-050: DEVELOPMENT PLAN AND AGREEMENT REQUIREMENTS.

(A) Subdivision Ordinance requirements shall generally apply to Planned Residential Communities. The developer shall submit a residential development plan of all project phases for City consideration and approval-and shall integrate the proposed development plan into a development agreement between the developer and City. The development agreement shall undergo an administrative review process to ensure compliance with adopted City ordinances and standards with approval by the City Council. The subdivider shall develop the property in accordance with the development agreement and current City ordinances in effect on the approval date of the agreement, together with the requirements set forth in the agreement, except when Federal, State, County, and/or City laws and regulations, promulgated to protect the public's health, safety, and welfare, require future modifications under circumstances constituting a rational public interest. The Land Use Authority shall use the submitted development plan and agreement with the design amenities and unique development features and merits of the development to determine overall development dwelling-unit density up to a maximum of twelve (12) dwelling units per net acre. (Ord. 08-07) (Ord. 12-01)

(B) A Planned Residential Development must have a minimum of five (5) acres with a minimum of twenty (20) percent of the acreage in common space area excluding required roadways, curbs, and other City infrastructure. (Ord. 11-04)

(C) The developer shall landscape all open or common space around or adjacent to building lots and maintain the same through a lawfully-organized home owner's association, residential management company, or similar organization.

(D) The development plan submitted for review shall show the location and building elevations with exterior building materials, size, and general footprint of all dwelling units and other main buildings and amenities.

(E) The development plan submitted for review shall include landscaping, fencing, and other improvement plans for common or open spaces, with the landscaping designed in accordance with an approved theme to provide unity and aesthetics to the project. The plan shall include all special features, such as ponds, fountains, signs, walking paths, inviting entryways, etc., together with a landscape planting plan. Open space and recreational areas should be the focal point for the overall design of the development, with various community facilities grouped in places well related to these open spaces and easily accessible to pedestrians.

(F) The proposed development shall show it will not be detrimental to the health, safety, or general welfare of persons residing adjacent to the proposed development.

(G) A planned residential community shall be of sufficient size, composition, and arrangement to enable its feasible development as a complete unit, managed by a legally-established owners' association and governed by enforceable, duly recorded CC&Rs. (Ord. 06-17)

10-15-060: DESIGN STANDARDS. The Land Use Authority shall approve the required common-building theme. The design shall show detail in the unification of exterior architectural style, building materials, and color and size of each unit; however, the intent is not to have the design so dominant that all units are identical. Residential dwellings shall comply with Syracuse City Design Ordinance 10-6-020.

10-15-070: STREET DESIGN. The Land Use Authority may approve an alternative street design so long as it maintains the City's minimum rights-of-way. The developer shall dedicate all street rights-of-way to the City.

10-15-080: OFF-STREET PARKING AND LOADING. Off -street parking and loading shall be as specified in Chapter 8 of this Title. Provided, however, that the City may limit or eliminate street parking or other use of City rights-of-way through the employment of limited or alternative street designs. (1991) (Ord. 06-17) (Ord. 08-07)

10-15-090: SIGNS. The signs permitted in this Zone shall be those allowed in residential zones by Chapter 9 of this Title.(1991) (Ord. 08-07)

CHAPTER 16

CLUSTER SUBDIVISION
(Major Conditional Use) (Ord. 12-01)

10-16-010: Purpose.

10-16-020: Development Requirements

10-16-030: Permitted Uses

10-16-040: Bonus Density Incentives

10-16-050: Design Standards

10-16-060: Approval

10-16-010: PURPOSE. Cluster Subdivisions may receive approval for a major conditional use permit in the Agriculture and R-1 Residential zones. The purpose of this ordinance is to encourage open space conservation and imaginative and efficient utilization of land by providing greater flexibility in the location of buildings on the land and the clustering of dwelling units. This will allow the developer to more closely tailor a development project to a specific user group, such as retired persons or equestrian-oriented development. The Land Use Authority shall not grant such a conditional use unless the Cluster Subdivision meets the regulations of the applicable zone in which it resides, except as may lawfully be modified by City Council approval. The application of cluster concepts is intended to encourage good neighborhood design and preserve open space while ensuring substantial compliance with the intent of the Subdivision and Land Use Ordinances. (Ord. 03-08) (Ord. 06-17) (Ord. 11-13)

10-16-020: DEVELOPMENT REQUIREMENTS

(A) A Cluster Subdivision shall have a minimum of ten (10) acres of land area.

(B) The development shall be in single or corporate ownership at the time of application or the subject of an application filed jointly by all owners of the property.

(C) The Land Use Authority shall require that the arrangement of structures and open spaces be developed in such a manner as to prevent any adverse affects on adjacent properties.

(D) The density of dwellings in a Cluster Subdivision shall not exceed that allowed by the zone in which a project is located, except when the Land Use Authority approves a bonus density. Density is calculated after discounting twenty (20) percent of the property for dedication as public street rights-of-way.

(E) Approval of the development plan shall determine lot area, lot width, setbacks, and lot coverage regulations. The minimum distance between any main buildings shall be ten (10) feet, and the minimum side yard for any single lot shall not be less than five (5) feet.

(F) The design and location of public sidewalks within a Cluster Subdivision may deviate from the Standard Roadway Section in the Syracuse Subdivision Ordinance Typical Details if the sidewalk location is within a public use

easement or completely within the street right-of-way per City approval. (Ord. 08-07) (Ord. 11-13)

(G) A clear area, thirty (30) feet wide, shall be maintained along both sides of all streets in a Cluster Subdivision for the location of utilities.

(H) Every Cluster Subdivision shall provide open space within the development. Such required open space shall not include streets, driveways, common space, or parking areas, but shall be totally landscaped or utilized as agricultural or recreation areas.

(I) The developer shall landscape all common space around or adjacent to building lots, and a lawfully organized and fully functional home owners' association shall maintain said common space from the onset.

(J) Preservation, use, maintenance, and ownership of open space within the development shall be accomplished through a home owners' association, or, at the discretion of the City Council, deeding the open space to Syracuse City.

(K) Due to the nature of Cluster Subdivisions and the fact that most of the usual dwellings have site restrictions and because the placement of dwellings and other structures on the site may produce a negative impact to surrounding land uses, the location, size, and general footprint of all dwellings and other main buildings shall be shown on the plans submitted for review.

(L) Landscaping, fencing, and other improvement plans for cluster development shall be presented to the Land Use Authority for approval along with other required plans for development. The estimated cost of these improvements shall be provided to the City by the developer and, after approval by the City Engineer, such estimated costs shall be included in the bonding requirements for the development. (Ord. 08-07)

(M) The proposed development shall not be detrimental to the health, safety, or general welfare of persons residing in the vicinity. (Ord. 06-17)

10-16-030: PERMITTED USES. Uses permitted in the Cluster Subdivision shall be those uses permitted in the zoning district in which the Subdivision is located, provided that, for purposes of this Section, the single-family dwelling designation shall include single family attached dwellings such as town houses and row houses or zero lot-line dwellings. A single structure shall have no more than four (4) attached dwelling units. (Ord. 08-07)

10-16-040: BONUS DENSITY INCENTIVES

(A) Bonus Density. The City shall consider additional units per acre for a development that complies with the Bonus Density Requirements. In no case shall the bonus density exceed the maximum allowed for the zone. To calculate the bonus density, add the incentive density to the standard density permitted in the proposed location. The awarded incentives are shown below: (Ord. 08-07)

ZONE DENSITY	INCENTIVE DENSITY	STANDARD DENSITY	MAXIMUM DENSITY
A-1	**2.0**	**05**	**2.5**
R-1	**1.85**	**2.9**	**4.75**

(Ord. 11-13)

(B) Bonus Density Calculations. For a permitted project to develop with a density greater than the zone allows, the density incentives must accrue in numerical order as outlined below: (Ord. 08-07)

1.	**Open Space Preservation**	**Bonus**
	A-1 Zone *Fifty (50) percent of the developed land*	**.80**
	R-1 Zone *Twenty-five (25) percent of the developed land*	**.65**
2.	**Building Design Standards** *The placement of restrictive covenants within the subdivision requiring a minimum seventy (70) percent brick or rock on exterior finishes for homes within the development and the construction of front porches that accommodate seating*	**.35**
3.	**Landscaping of Park Strips** *Planting approved trees species (min two- [2]" inch Caliper) every fifty (50) feet in park strips together with moving the sidewalk four (4) feet closer to the homes or by using serpentine sidewalks in a fashion to "meander" through the park strip and front yard areas*	**.20**
4.	**Home Owners Association** *Creating a Home Owners Association to maintain landscaped entrance ways and common space*	**.30**
5.	**Landscaped Entrance Ways** *The development of entranceways to the subdivision development including subdivision identification signs*	**.15**
6.	**Amenities to Open Space** *The funding and placement of approved amenities to open space or common areas*	**.10**
7.	**Trail System/Walking Paths** *Development of walking paths connecting to the City's trail system*	**.10**

(Ord. 11-13)

(C) Development of open or common space shall comply with the following standards:

1. Landscaping Plan. The Land Use Authority shall review the conceptual landscaping plan designed in accordance with an approved theme that provides unity and aesthetics to the project. The landscaping plan shall indicate all special features, such as ponds, fountains, signs, walking paths, plant species and size, etc., together with a planting plan.

2. Open Space. Property designated as open space on the landscaping plan shall be for the use and enjoyment of the residents or community. The developer shall develop and improve open space that is not in the ownership of the City or maintain it for agricultural use or grazing. The developer must complete the open space landscaping prior to approval of the next consecutive phase of subdivision development.

3. Common Space. The developer may identify property within the development that surrounds the dwelling structures as common space. The developer shall be responsible for developing and maintaining such common space. (Ord. 08-07)

10-16-050: DESIGN STANDARDS. A common building theme shall be required and approved by the Planning Commission. The design shall show detail in the unification of exterior architectural style, color, and size of each unit; however, the intent is not to have the design so dominant that all units are identical.

10-16-060: APPROVAL. A Cluster Subdivision is a special type of subdivision approved by major conditional use permit and, as such, shall meet design standards and be subject to all

provisions of the Syracuse Subdivision Ordinance and submitted development plans. (Ord. 06-17) (Ord. 11-13)

10-16-070: DEVELOPMENT PLAN AND AGREEMENT REQUIREMENTS. (Added by Ord. 11-13)

(A) Subdivision Ordinance requirements shall generally apply to Cluster Subdivisions. The developer shall submit a residential development plan of all project phases for City consideration and approval and shall integrate the proposed development plan into a development agreement between the developer and City. The development agreement shall undergo an administrative review process to ensure compliance with adopted City ordinances and standards with approval by the City Council. The subdivider shall develop the property in accordance with the development agreement and current City ordinances, including the development requirements as identified within this Chapter, in effect on the approval date of the agreement, together with the requirements set forth in the agreement, except when Federal, State, County, and/or City laws and regulations, promulgated to protect the public's health, safety, and welfare, require future modifications under circumstances constituting a rational public interest. The Land Use Authority shall use the submitted development plan and agreement with the design amenities and unique development features and merits of the development to determine overall development dwelling-unit density up to a maximum as determined by the bonus density calculations. (Ord. 11-13)

(B) The development plan submitted for review shall show the location and building elevations with exterior building materials, size, and general footprint of all dwelling units and other main buildings and amenities. (Ord. 11-13)

(C) The development plan submitted for review shall include landscaping, fencing, and other improvement plans for common or open spaces, with the landscaping designed in accordance with an approved theme to provide unity and aesthetics to the project. The plan shall include all special features, such as ponds, fountains, signs, walking paths, inviting entryways, etc., together with a landscape planting plan. Open space and recreational areas should be the focal point for the overall design of the development, with various community facilities grouped in places well related to these open spaces and easily accessible to pedestrians. (Ord. 11-13)

(D) The proposed development shall show it will not be detrimental to the health, safety, or general welfare of persons residing adjacent to the proposed development. (Ord. 11-13)

(E) A Cluster Subdivision community shall be of sufficient size, composition, and arrangement to enable its feasible development as a complete unit, managed by a legally-established owners' association and governed by enforceable, duly recorded CC&Rs. (Ord. 11-13)

CHAPTER 17

PO - PROFESSIONAL OFFICE

10-17-010: Purpose

10-17-020: Permitted Uses

10-17-030: Conditional Uses

10-17-040: Minimum Lot Standards

10-17-050: Distance Between Buildings

10-17-060: Off-Street Parking and Loading

10-17-070: Signs

10-17-080: Special Provisions

10-17-010: PURPOSE. The purpose of this Zone is to provide appropriate locations for the development, maintenance, and protection of professional and administrative establishments. The regulations of this Zone shall promote a quiet environment for business administration, professional/medical, and government activities, free from the congestion and traffic of the usual commercial business district. The Professional Office Zone is intended to provide a buffer or transition along minor or major collector streets adjoining residential neighborhoods. To this end, the regulations permit professional office buildings, medical, and appropriate non-automobile oriented financial facilities primarily for the service of the area residents. The intensity of development of such a district shall reflect its environmental setting with building height and coverage generally similar to and harmonious with those of neighboring residential districts. (Ord. 08-07)

10-17-020: PERMITTED USES. The following are permitted uses by right provided the parcel and building meet all other provision of this Title or any other applicable ordinances of Syracuse City and receive site plan approval as provided in Section 10-4-090 of this Title. (Ord. 08-07)

(A) Administrative and Executive Offices

(B) Animal Clinics (Ord. 11-02)

(C) Assisted Living Centers (Ord. 06-17)

(D) Churches, Synagogues, and Temples (Ord. 11-02)

(E) Financial Planning, Investment Planning, Real Estate, and General Business Offices

(F) Marriage and Family Counseling Services

(G) Medical and Other Health Facilities (Ord. 08-07)

(H) Professional Non-Retail Services (Ord. 11-02)

(I) Professional Offices (for lawyers, engineers, and architects)

10-17-030: CONDITIONAL USES. The following may be permitted as conditional uses after application and approval as specified in Section 10-4-080 of this Title. (Ord. 08-07)

(A) Accessory Buildings (two hundred [200] square feet or greater) [Minor] (Ord. 11-10)

(B) Animal Hospitals [Major] (Ord. 11-10)

(C) Churches or Religious Service Buildings [Major] (Ord. 11-10)

(D) Optical Shops [Minor] (Ord. 11-10)

(E) Preschool Centers [Major] (Ord. 11-02)(Ord. 11-10)

(F) Public and Quasi-Public Buildings [Major] (Ord. 06-17) (Ord. 11-10)

(G) Temporary Commercial Uses (see Section 10-7-050) [Minor] (Ord. 11-10)

10-17-040: MINIMUM LOT STANDARDS. All lots developed and all structures and uses placed on lots shall be in accordance with the following standards. Lot area for properties in this Zone shall front existing minor or major collector streets of the City and include all property as described on the most recent plat of record.

(A)	Lot Area:	Minimum of half (.50) an acre to maximum of ten (10) acres
(B)	Lot Width:	One hundred (100) feet
(C)	Front Yard:	Fifteen (15) feet
(D)	Side Yards:	As required by site plan review
(E)	Rear Yard:	As required by site plan review
(F)	Building Height:	The height of buildings over thirty-five (35) feet may be equal to the horizontal distance from the nearest zone boundary line. Buildings thirty-five (35) feet high or less may be located within ten (10) feet of the Zone boundary line. In determining height, exclude uses not for human occupancy, such as chimneys, flagpoles, church towers, and similar structures.

10-17-050: DISTANCE BETWEEN BUILDINGS. In this Zone, where there is more than one (1) office building constructed on a site, there shall be a minimum distance between structures of at least twenty (20) feet.

10-17-060: OFF-STREET PARKING AND LOADING. Off -street parking and loading shall be provided as specified in Chapter 8 of this Title. (Ord. 08-07)

10-17-070: SIGNS. Signs permitted in this Zone shall be those allowed in professional office zones by Chapter 9 of this Title. (Ord. 12-05)

10-17-080: SPECIAL PROVISIONS.

(A) Landscaping. In this Zone, the following landscaping requirements shall include:

1. Ten (10) feet of landscaping along frontage areas not occupied by drive accesses

2. A sprinkling system and plantings with substantial live plant material for the purpose of buffering, screening, and beautifying the site (Plant maturity landscaping should represent, as a minimum standard, compatibility with surrounding developed properties and uses with permanent maintenance by the owner or occupants)

3. A minimum buffer of ten (10) feet adjacent to residential zoning

4. A landscaped area of five (5) feet adjacent to off-street parking within required yard areas providing it does not abut residential zoning or uses (Landscaping in areas adjacent to residential uses shall be according to buffering requirements per Chapter 6 of this Title) (Ord. 08-07)

5. Landscaping installed in all park strips to the same standards as other on-site landscaping as well as a minimum of two (2) trees per every fifty (50) feet of frontage (Asphalt, paving stones, or brick or concrete paving in place of landscaping between the sidewalk and curb is prohibited)

6. Landscaping covering at least fifteen (15) percent of the development site. Landscaping shall be installed within four (4) months of occupancy and maintained in good condition

(B) Fencing. Where the site abuts a residential zone, a six- (6) foot high decorative texture solid-masonry wall shall be located along the property line. All fencing must comply with Chapter 6 of this Title. (Ord. 08-07)

(C) Trash Storage. A screened or otherwise enclosed area, or outside area designated for a trash dumpster or other trash-control device, shall be an integral part of the on-site buildings to keep the trash out of public view and prevent litter from scattering throughout the area. The building materials for dumpster enclosures shall be similar to those of the primary-use building. (Ord. 08-07)

(D) Lighting. The following provisions shall apply to installation, maintenance, and operation of outdoor lighting in this Zone:

1. All lights shall have shields to direct all light toward the earth's surface and away from reflective surfaces.

2. Light fixtures or lamps shall have shields or shades to direct incident rays away from all adjacent property.

3. Lights on poles shall not be taller than the building whose area they illuminate nor taller than fifteen (15) feet, whichever is shorter.

4. Any facilities requiring floodlights may not arrange the light(s) in such a way that it will shine towards roadways, onto adjacent residential property or residential use property, or into the night sky.

5. The placement of any light fixture shall be in such a manner that no light-emitting surface is visible from any residential area when viewed at ground level.

6. The level of lighting shall not exceed half- (0.5) foot-candles at any residential property line or one- (1.0) foot candles at any non-residential property line.

7. Any canopy structure used at a business office location must have recessed lights with diffusers that do not extend below the surface of the canopy.

8. Any luminaire on a pole, stand, or mounted on a building must have a shield, an adjustable reflector, and a non-protruding diffuser. (Ord. 06-17)

CHAPTER 18

GC - GENERAL COMMERCIAL

10-18-010: Purpose

10-18-020: Permitted Uses

10-18-030: Conditional Uses

10-18-040: Minimum Lot Standards

10-18-050: Off-Street Parking and Loading

10-18:060: Signs

10-18-070: Special Provisions

10-18-080: Development Theme

10-18-090: Development Plan

10-18-100: Architectural Review Committee

10-18-010: PURPOSE. The purpose of this Zone is to provide for a broad range of retail, service, and entertainment functions.(1991)

10-18-020: PERMITTED USES. The following are permitted uses by right provided the parcel and building meet all other provisions of this Title or any other applicable ordinances of Syracuse City and receive site plan approval as provided in Section 10-4-090 of this Title. (1991) (Ord. 08-07)

(A) Agriculture

(B) Amusement and Recreational Activities

(C) Animal Clinics (Ord. 11-02)

(D) Automotive Retail and Routine Maintenance Services (Ord. 08-11)

(E) Car Washes, full-service tunnel style (Ord. 08-11)

(F) Churches, Synagogues, and Temples (Ord. 11-02)

(G) Dwellings (completed or under construction at the time of adoption of this Title [If such dwellings convert to any other permitted or conditional use allowed in this Section or Section 10-17-030, they may not thereafter convert back to residential use without first obtaining a Conditional Use Permit])

(H) Hotels and Motels

(I) Professional Office Buildings (situated on one [1] acre or less) (Ord. 06-17)

(J) Public and Quasi-Public Buildings

(K) Public Parks

(L) Restaurants and Fast Food Services

(M) Retail Trade

10-18-030: CONDITIONAL USES. The following may be permitted as conditional uses after application and approval as specified in Section 10-4-080 of this Title. (Ord. 08-07)

(A) Accessory Uses and Buildings (two hundred [200] square feet or greater) [Minor] (Ord. 11-10)

(B) Animal Hospitals [Major] (Ord. 11-02) (Ord. 11-10)

(C) Professional Non-Retail Services, up to a maximum twenty-five (25) percent of the commercial subdivision. [Major] (Ord. 11-02) (Ord. 11-10)

(D) Temporary Commercial Uses (see Section 10-7-050) [Minor] (Ord. 11-10)

10-18-040: MINIMUM LOT STANDARDS. All lots developed and all structures and uses placed on lots shall be in accordance with the following lot standards:

(A)	Lot Area:	No minimum required
(B)	Lot Width:	As required by site plan review
(C)	Front Yard:	Fifteen (15) feet
(D)	Side Yards:	As required by site plan review
(E)	Rear Yard:	Ten (10) feet
(F)	Building Height:	The height of buildings over thirty-five (35) feet may be equal to the horizontal distance from the nearest zone boundary line. Buildings thirty-five (35) feet high or less may be permitted within ten (10) feet of the zone boundary line

10-18-050: OFF-STREET PARKING AND LOADING. Off -street parking and loading shall be provided as specified in Chapter 8 of this Title. (1991). (Ord. 08-07)

10-18-060: SIGNS. The signs permitted in this Zone shall be those allowed in commercial zones by Chapter 9 of this Title. (1991) (Ord. 08-07)

10-18-070: SPECIAL PROVISIONS.

(A) All lots, parcels, or sites shall have a minimum fifteen (15) percent of the total area landscaped, including all required front yards, installed within four (4) months of occupancy and permanently maintained in good condition. (2001)

(B) Temporary buildings for intermittent commercial uses shall meet the provisions of the currently adopted edition of the International Building Code and must be sufficiently anchored to withstand a one hundred (100) mile per hour wind. (1991)

(C) Commercial uses that require grease traps/interceptors shall locate such devices on the outside of the restaurant or food service building and frequently and effectively service such devices to maintain them in satisfactory working order to protect the sanitary sewer system from excessive contaminants. A licensed hauler shall dispose of all materials removed from a grease trap/interceptor at an approved disposal site in a lawful manner. (Ord. 08-07)

Restaurant, food service businesses, or commercial uses of used fryer oil shall dispose of such oil into a self contained oil-rendering tank for disposal and transport. Outside or “refuse/dumpster” storage of oil-rendering barrels or other containers is prohibited.

(D) In order to minimize the possibility of commercial properties becoming blighted, retail establishments of forty thousand (40,000) square feet or greater shall enter into a Facility Use Agreement with the City prior to the issuance of a building permit. Additionally, the owner shall submit a facility maintenance plan as required in 10-18-7(D)3 thirty (30) days prior to the owner vacating the building. (Ord. 08-07)

1. The terms “vacant” or “vacate” as used herein shall mean that no business activity is undertaken from the retail establishment for a period of one hundred eighty (180) consecutive days.

2. The Facility Use Agreement shall outline the responsibility of the owner to remove the building, should it become vacant for more than three and one-half (3 ½) consecutive years, and shall provide legal remedies to enforce the terms of the agreement. In the event a building is vacant for more than three and one-half (3 ½) consecutive years, the owner shall remove the building and restore the property to a safe and compatible condition. The Facility Use Agreement shall be in substantially the following form, which form is hereby adopted as part of this Title.

Facility Use Agreement

AN AGREEMENT BY AND BETWEEN _____, A _____ HEREINAFTER REFERRED TO AS OWNER, AND SYRACUSE CITY, A MUNICIPAL CORPORATION HEREINAFTER REFERRED TO AS CITY.

Recitals

1) The Owner desires to construct a commercial facility, at approximately _____, in Syracuse City to conduct a business known as _____.
2) The City has adopted ordinances to govern the development of commercial property within Syracuse City designed to protect the health, safety, and welfare of the community.
3) The City has valid concern that blighted conditions might occur should said facility or structure become vacant for an extended period of time.
4) The Owner and City are desirous to minimize impact to the community should the building become vacant.

Agreement

NOW, THEREFORE, for and in consideration of the mutual promises, covenants, and conditions set forth herein, and other good and valuable consideration, the Owner and City agree as follows:

1) Owner will provide the City a written facility management plan thirty (30) days prior to vacating the building which outlines plans to maintain the property according to City Ordinance. Failure to do so will constitute a breach of this Agreement and entitle the City to injunctive relief to enforce the provisions hereof.
2) Should the building remain vacant for forty-two (42) consecutive months, the City shall provide written notice to the Owner, at the address as it appears on this Agreement, ordering Owner to remove the building and restore the property to a condition that does not distract from surrounding businesses.
3) Should the Owner fail to comply with the City’s request to remove

the building within thirty (30) days from the mailing date of said notice to the Owner, the City may file suit for specific performance to enforce the terms of this Agreement.

IN WITNESS WHEREOF, the parties hereto have caused this Agreement to be executed this _____ day of _____, 20__

(Signed, witnessed and/or attested)

3. In the event, for any reason, the retail establishment chooses to vacate the premise for a period of six (6) months or greater, the owner shall submit a facility maintenance plan to the City thirty (30) days prior to vacating. The maintenance plan shall include:

   (a) The estimated time the facility will be vacant

   (b) Detailed plans to maintain the property during the time it will be vacant

   (c) Method of securing all entrances to the facility

   (d) Plans to restrict access to off-street parking

   (e) Plans to remove all advertisement and business signage

   (f) Plans to market the property (Ord. 06-17)

(E) Existing residential and accessory structures in this Zone may be converted for commercial purposes if the property meets all the following conditions: (Ord. 08-07)

1. The proposed use for the structure conforms to the permitted use for this Zone.

2. The proposed use of the building does not adversely impact the surrounding area.

3. The primary residential structure adds appeal and character to the area, and the property owner ensures appropriate maintenance of all existing structures on the property as well as the entire property itself in order to keep the appeal.

4. The lot size has a minimum of twenty-one thousand seven hundred eighty (21,780) square feet.

5. The parcel has a minimum one hundred ten (110) feet of frontage on an existing public street.

6. Setbacks comply with the established minimum requirements for this Zone and receive approval with site plan.

7. The lot has an existing driveway access from a public street and receives approval with site plan for any proposed modifications to said driveway (The Utah Department of Transportation shall also approve any access located on a State road).

8. All off-street parking complies with the requirements in Chapter 8 of this Title and receives approval with site plan.

9. All signs and lighting complies with the requirements in Chapter 9 of this Title and receives approval with site plan.

11. All landscape and buffering complies with the established requirements in Chapter 6 of this Title and receives approval with site plan.

12. The Building and Fire departments inspect and approve the use.

(F) In order to maximize the availability of commercial and retail space for commercial and retail businesses in this zone, the amount of space available for professional businesses shall be limited to no more than 20% of the gross floor area available for lease or purchase in any commercial development. Professional business shall include but not be limited to physicians, dentists, lawyers, accountants, real estate agents, insurance agents, artists, planners, architects, engineers, travel agencies, and similar professional businesses. (Ord. 08-11)

10-18-080 **DEVELOPMENT THEME**. Development in this Zone shall conform to an approved development theme. The theme shall be approved by the City Council, and shall conform to the provisions outlined in the area's Master Plan. (Ord. 08-11)

10-18-090 **DEVELOPMENT PLAN** To ensure development conforms to the area's Master Plan, City staff shall review and approve all development plans. Drawings should include the placement of buildings and their uses, landscaping, parking, lighting, and design guidelines outlined in the area's Master Plan. The Architecture Review Committee shall likewise review and approve the plans prior to consideration and recommendation by the Planning Commission. (Ord. 08-11)

10-18-100 **ARCHITECTURAL REVIEW COMMITTEE**. This Committee shall consist of seven (7) members appointed by the Mayor, with the consent of the City Council, to review development plans. Members shall be representatives of the community, City Council, Planning Commission, and City staff. The Committee shall be responsible to review the plan and make recommendations to the Planning Commission for consideration. The Planning Commission will, in turn, submit their recommendations to the City Council for approval. (Ord. 08-11)

CHAPTER 19

C-2 COMMERCIAL

10-19-010: Purpose

10-19-020: Permitted Uses

10-19-030: Conditional Uses

10-19-040: Minimum Lot Standards

10-19-050: Residential Dwellings

10-19-060: Development Theme

10-19-070: Development Plan

10-19-080: Architecture Review Committee

10-19-090: Off-Street Parking and Loading

10-19-100: Signs

10-19-110: Special Provisions

10-19-010: PURPOSE. The purpose of this Zone is to provide for a wide range of development opportunities that introduce a mixed-use concept. Mixing commercial and residential uses creates an environment where people can live, work, and access commercial and civic facilities, thus creating an activity nexus that promotes an urban environment. (Ord. 03-08)

10-19-020: PERMITTED USES. The following are permitted uses by right provided the parcel of land and structure(s) meet all other provisions of this Title or any other applicable ordinances of Syracuse City and receive site plan approval as provided in Section 10-4-090 of this Title. (Ord. 08-07)

(A) Animal Clinics (Ord. 11-02)

(B) Business Services and Professional Offices

(C) Churches, Synagogues, and Temples (Ord. 11-02)

(D) Community or Civic Services

(E) Hotels and Motels

(F) Public and Quasi-Public Buildings

(G) Public Parks

(H) Restaurants and Fast Food Services

(I) Retail Trade

(J) Theaters and Amusement Facilities (Ord. 06-17) (Ord. 08-07)

10-19-030: CONDITIONAL USES. The following may be permitted as conditional uses after application and approval as specified in Section 10-4-080 of this Title. (Ord. 08-07)

(A) Accessory Uses and Buildings (two hundred [200] square feet or greater) [Minor] (Ord. 11-10)

(B) Day-Care Centers [Major] (Ord. 03-08) (Ord. 11-10)

(C) Dwellings, Single-Family [Major] (Ord. 11-10)

(D) Dwellings, Two- (2) Family [Major] (Ord. 11-10)

(E) Medical and Other Health Facilities [Major] (Ord. 08-07) (Ord. 11-10)

(F) Professional Non-Retail Services, up to a maximum twenty-five (25) percent of the commercial subdivision. [Major] (Ord. 11-02) (Ord. 11-10)

(G) Temporary Commercial Uses (see Section 10-7-050) [Minor] (Ord. 11-10)

10-19-040: MINIMUM LOT STANDARDS. All lots developed and all structures and uses placed on lots shall be in accordance with the following lot standards:

(A) Lot Area: No minimum required

(B) Lot Width: As required by site plan review

(C) Front Yard: As required by site plan review

(D) Side Yards: As required by site plan review

(E) Rear Yard: Ten (10) feet

(F) Building Height: The height of buildings over thirty-five (35) feet may be equal to the horizontal distance from the nearest zone boundary line. Buildings thirty-five (35) feet high or less may be located within ten (10) feet of the zone boundary line.

(G) The Planning Commission shall determine minimum lot standards for residential dwelling units as part of the site plan development.

10-19-050: RESIDENTIAL DWELLINGS. Development of Single and Two- (2) Family Dwellings shall conform to the provisions of the area's "Master Plan" and ensure compatibility with the overall theme of the development. In no case shall residential dwellings occupy more than twenty (20) percent of the total land developed. To determine the total number of allowable residential dwelling units, deduct twenty (20) percent from the gross acreage, for roads and other public spaces, and multiply the sum by nine and one-tenths (9.1). The Architecture Review Committee shall approve the site plan prior to its submittal to the Planning Commission for consideration. Residential development shall also be part of the twenty (20) percent permitted in conjunction with commercial structures allowed in the zone. (Ord. 08-07)

10-19-060: DEVELOPMENT THEME. Development in this Zone shall conform to an approved development theme. The theme shall be approved by the City Council, and shall conform to the provisions outlined in the area's Master Plan. (Ord. 08-07)

10-19-070: DEVELOPMENT PLAN. To ensure development conforms to the area's Master Plan, City staff shall review and approve all development plans. Drawings should include the placement of buildings and their uses, landscaping, parking, lighting, and design guidelines outlined in the area's Master Plan. The Architecture Review Committee shall

likewise review and approve the plans prior to consideration and recommendation by the Planning Commission. (Ord. 08-07)

10-19-080: ARCHITECTURE REVIEW COMMITTEE. This Committee shall consist of seven (7) members appointed by the Mayor, with the consent of the City Council, to review development plans. Members shall be representatives of the community, City Council, Planning Commission, and City staff. The Committee shall be responsible to review the plan and make recommendations to the Planning Commission for consideration. The Planning Commission will, in turn, submit their recommendations to the City Council for approval.

10-19-090: OFF-STREET PARKING AND LOADING. Off -street parking and loading shall be provided as specified in Chapter 8 of this Title. (Ord. 08-07)

10-19-100: SIGNS. Signs permitted in this Zone shall be those allowed in commercial or residential areas by Chapter 9 of this Title. (Ord. 08-07)

10-19-110: SPECIAL PROVISIONS.

(A) All lots, parcels, or sites shall have a minimum fifteen (15) percent of the total area landscaped, including all required front yards, installed within four (4) months of occupancy and permanently maintained in good condition.

(B) Temporary buildings shall meet the provisions of the currently adopted editions of the International Building Code and must be sufficiently anchored to withstand a one-hundred (100) mile per hour wind.

(C) Commercial uses that require grease traps/interceptors shall locate such devices on the outside of the restaurant or food service building and frequently and effectively service such devices to maintain them in satisfactory working order to protect the sanitary sewer system from excessive contaminants. A licensed hauler shall dispose of all materials removed from a grease trap/interceptor at an approved disposal site in a lawful manner. (Ord. 08-07)

Restaurant, food service businesses, or commercial uses of used-fryer oil shall dispose of such oil into a self-contained oil-rendering tank for disposal and transport. Outside or “refuse/dumpster” storage of oil-rendering barrels or other containers is prohibited.

(D) In order to minimize the possibility of commercial properties becoming blighted, retail establishments of forty thousand (40,000) square feet or greater shall enter into a Facility Use Agreement with the City prior to the issuance of a building permit. Additionally, the owner shall submit a facility maintenance plan as required in 10-19-110(D)3 thirty (30) days prior to the owner vacating the building. (Ord. 08-07)

1. The terms “vacant” or “vacate” as used herein shall mean that no business activity is undertaken from the retail establishment for a period of one hundred eighty (180) consecutive days.

2. The Facility Use Agreement shall outline the responsibility of the owner to remove the building, should it become vacant for more than three and one-half (3 ½) consecutive years, and shall provide legal remedies to enforce the terms of the agreement. In the event a building is vacant for more than three and one-half (3 ½) consecutive years, the owner shall remove the building and restore the property to a safe and compatible condition. The Facility Use Agreement shall be in substantially the following form, which form is hereby adopted as part of this Title.

Facility Use Agreement

AN AGREEMENT BY AND BETWEEN _____, A _____, HEREINAFTER REFERRED TO AS OWNER, AND SYRACUSE CITY, A MUNICIPAL CORPORATION HEREINAFTER REFERRED TO AS CITY.

Recitals

1) The Owner desires to construct a commercial facility, at approximately _____, in Syracuse City to conduct a business known as _____.
2) The City has adopted ordinances to govern the development of commercial property within Syracuse City designed to protect the health, safety, and welfare of the community.
3) The City has valid concern that blighted conditions might occur should said facility or structure become vacant for an extended period of time.
4) The Owner and City are desirous to minimize impact to the community should the building become vacant.

Agreement

NOW, THEREFORE, for and in consideration of the mutual promises, covenants, and conditions set forth herein, and other good and valuable consideration, the Owner and City agree as follows:

1) Owner will provide the City a written facility management plan thirty (30) days prior to vacating the building which outlines plans to maintain the property according to City Ordinance. Failure to do so will constitute a breach of this Agreement and entitle the City to injunctive relief to enforce the provisions hereof.
2) Should the building remain vacant for forty-two (42) consecutive months, the City shall provide written notice to the Owner, at the address as it appears on this Agreement, ordering Owner to remove the building and restore the property to a condition that does not distract from surrounding businesses.
3) Should the Owner fail to comply with the City's request to remove the building within thirty (30) days from the mailing date of said notice to the Owner, the City may file suit for specific performance to enforce the terms of this Agreement.

IN WITNESS WHEREOF, the parties hereto have caused this Agreement to be executed this _____ day of _____, 20__

(Signed, witnessed, and/or attested.)

3. In the event, for any reason, the retail establishment chooses to vacate the premises for a period of six (6) months or greater, the owner shall submit a facility maintenance plan to the city thirty (30) days prior to vacating. The maintenance plan shall include:

(a) The estimated time the facility will be vacant

(b) Detailed plans to maintain the property during the time it will be vacant

(c) Method of securing all entrances to the facility

(d) Plans to restrict access to off-street parking

(e) Plans to remove all advertisement and business signage

(f) Plans to market the property (Ord. 05-22) (Ord. 06-17)

(E) Existing residential and accessory structures may remain in this Zone for

commercial purposes if the property meets all the following conditions: (Ord. 08-07)

1. The proposed use for the structure conforms with the permitted use for this Zone.

2. The proposed use of the building does not adversely impact the surrounding area.

3. The primary residential structure adds appeal and character to the area, and the property owner ensures appropriate maintenance of all existing structures on the property as well as the entire property itself in order to keep the appeal.

4. The lot size has a minimum of twenty-one thousand seven hundred eighty (21,780) square feet.

5. The parcel has a minimum one hundred ten (110) feet of frontage on an existing public street.

6. Setbacks comply with the established minimum requirements for this Zone and receive approval with site plan.

7. The lot has an existing driveway access from a public street and receives approval with site plan for any proposed modifications to said driveway (The Utah Department of Transportation shall also approve any access located on a State road).

8. All off-street parking complies with the requirements in Chapter 8 of this Title and receives approval with site plan.

9. All signs and lighting complies with the requirements in Chapter 9 of this Title and receives approval with site plan.

10. All landscape and buffering complies with the established requirements in Chapter 6 of this Title and receives approval with the site plan.

11. The Building and Fire departments inspect and approve the use.

CHAPTER 20

TOWN CENTER OVERLAY ZONE

10-20-010: Purpose

10-20-020: Development Requirements

10-20-030: Permitted Uses

10-20-040: Development Theme

10-20-050 Development Plan

10-20-060 Architecture Review Committee

10-20-070 Special Provisions

10-20-010: PURPOSE. This zone includes the land area as defined on the Syracuse City Current Zoning and General Plan maps. The purpose of the Town Center Overlay Zone is to provide a method for implementing special provisions regarding the establishment and promotion of a central core area of the community characterized by stringent design standards for buildings, public spaces, site design and landscaping with a harmonious and wide range of development opportunities that introduce a mixed-use concept. While the Town Center zoning classification is intended address new construction that may occur with the Town Center area, it is also intended to support the preservation and adaptive re-use of any existing historic structures; the preservation of existing natural features, especially trees; new development that blends in with existing conditions and enhances the traditional town center character; the advancement of architectural and site design standards that promote walkability and human scale; the creation and maintenance of historic town center identity. (Ord. 09-09)

10-20-020: DEVELOPMENT REQUIREMENTS. Development requirements shall conform to the guidelines and standards as set forth in the Town Center Master Plan. (Ord. 09-09)

10-20-030: PERMITTED USES. Uses permitted within the Town Center Overlay Zone are those uses as permitted or conditionally permitted under current zoning or the uses as outlined in City's General Plan as adopted. (Ord. 09-09)

10-20-040: DEVELOPMENT THEME. Development in this Zone shall conform to an approved development theme. The theme shall be reviewed and recommended for approval by the Architectural Review Committee. Final approval of any development theme shall be by the City Council, and shall conform to the provisions outlined in the Town Center Master Plan. (Ord. 09-09)

10-20-050: DEVELOPMENT PLAN. To ensure development conforms to the Town Center Master Plan, City staff shall review and approve all development plans. Drawings should include the placement of buildings and their uses, landscaping, parking, lighting, and design guidelines outlined in the area's Master Plan. Before submittal to the Planning Commission for recommendation and to the City Council for final approval the all plans, elevations and architectural details shall be reviewed by the Architectural Review Committee. The Architectural Review Committee shall review and recommend any plans, elevations or details prior to consideration by the Planning Commission and approval by the City Council. (Ord. 09-09)

10-20-060: ARCHITECTURE REVIEW COMMITTEE. All proposed development plans within the Town Center Overlay Zone shall be reviewed by the Architectural Review Committee. This Committee shall consist of seven (7) members appointed by the Mayor, with the

consent of the City Council, to review development plans. Members shall be representatives of the community, City Council, Planning Commission, and City staff. The Committee shall be responsible to review the plan, elevations and architectural details and make recommendations to the Planning Commission for consideration. The Planning Commission will, in turn, submit their recommendations to the City Council for final approval. (Ord. 09-09)

10-20-070: SPECIAL PROVISIONS.

(A) All lots, parcels, or sites shall have a minimum fifteen (15) percent of the total area landscaped, including all required front yards, installed within four (4) months of occupancy and permanently maintained in good condition. (Ord. 09-09)

(B) Temporary buildings shall meet the provisions of the currently adopted editions of the International Building Code and must be sufficiently anchored to withstand a one-hundred (100) mile per hour wind. (Ord. 09-09)

(C) Commercial uses that require grease traps/interceptors shall locate such devices on the outside of the restaurant or food service building and frequently and effectively service such devices to maintain them in satisfactory working order to protect the sanitary sewer system from contaminants. A licensed hauler shall dispose of all materials removed from a grease trap/interceptor at an approved disposal site in a lawful manner. (Ord. 09-09)

Restaurant, food service businesses, or commercial uses of used-fryer oil shall dispose of such oil into a self-contained oil-rendering tank for disposal and transport. Outside or “refuse/dumpster” storage of oil-rendering barrels or other containers is prohibited. (Ord. 09-09)

(D) In order to minimize the possibility of commercial properties becoming blighted, retail establishments of forty thousand (40,000) square feet or greater shall enter into a Facility Use Agreement with the City prior to the issuance of a building permit. Additionally, the owner shall submit a facility maintenance plan as required in this chapter thirty (30) days prior to the owner vacating the building. (Ord. 09-09)

1. The terms “vacant” or “vacate” as used herein shall mean that no business activity is undertaken from the retail establishment for a period of one hundred eighty (180) consecutive days.

2. The Facility Use Agreement shall outline the responsibility of the owner to remove the building, should it become vacant for more than three and one-half (3 ½) consecutive years, and shall provide legal remedies to enforce the terms of the agreement. In the event a building is vacant for more than three and one-half (3 ½) consecutive years, the owner shall remove the building and restore the property to a safe and compatible condition. The Facility Use Agreement shall be in substantially the following form, which form is hereby adopted as part of this Title.

Facility Use Agreement

AN AGREEMENT BY AND BETWEEN _____, A _____, HEREINAFTER REFERRED TO AS OWNER, AND SYRACUSE CITY, A MUNICIPAL CORPORATION HEREINAFTER REFERRED TO AS CITY.

Recitals

1) The Owner desires to construct a commercial facility, at approximately _____, in Syracuse City to

conduct a business known as _____.

2) The City has adopted ordinances to govern the development of commercial property within Syracuse City designed to protect the health, safety, and welfare of the community.
3) The City has valid concern that blighted conditions might occur should said facility or structure become vacant for an extended period of time.
4) The Owner and City are desirous to minimize impact to the community should the building become vacant.

Agreement

NOW, THEREFORE, for and in consideration of the mutual promises, covenants, and conditions set forth herein, and other good and valuable consideration, the Owner and City agree as follows:

1) Owner will provide the City a written facility management plan thirty (30) days prior to vacating the building which outlines plans to maintain the property according to City Ordinance. Failure to do so will constitute a breach of this Agreement and entitle the City to injunctive relief to enforce the provisions hereof.
2) Should the building remain vacant for forty-two (42) consecutive months, the City shall provide written notice to the Owner, at the address as it appears on this Agreement, ordering Owner to remove the building and restore the property to a condition that does not distract from surrounding businesses.
3) Should the Owner fail to comply with the City's request to remove the building within thirty (30) days from the mailing date of said notice to the Owner, the City may file suit for specific performance to enforce the terms of this Agreement.

IN WITNESS WHEREOF, the parties hereto have caused this Agreement to be executed this _____ day of _____, 20__

(Signed, witnessed, and/or attested.)

3. In the event, for any reason, the retail establishment chooses to vacate the premises for a period of six (6) months or greater, the owner shall submit a facility maintenance plan to the city thirty (30) days prior to vacating. The maintenance plan shall include:

(a) The estimated time the facility will be vacant

(b) Detailed plans to maintain the property during the time it will be vacant

(c) Method of securing all entrances to the facility

(d) Plans to restrict access to off-street parking

(e) Plans to remove all advertisement and business signage

(f) Plans to market the property (Ord. 05-22) (Ord. 06-17)

(E) Existing residential and accessory structures may remain in this Zone for commercial purposes if the property meets all the following conditions: (Ord. 09-09)

1. The proposed use for the structure conforms with the permitted use for this Zone.

2. The lot size has a minimum of twenty-one thousand seven hundred eighty (21,780) square feet.

3. The parcel has a minimum frontage as required by zoning on an

existing public street.

4. Setbacks comply with the established minimum requirements for this Zone and receive approval with site plan.

5. The lot has an existing driveway access from a public street and receives approval with site plan for any proposed modifications to said driveway (The Utah Department of Transportation shall also approve any access located on a State road).

6. All off-street parking complies with the requirements in Chapter 8 of this Title and receives approval with site plan.

7. All signs and lighting complies with the requirements in Chapter 9 of this Title and receives approval with site plan.

8. All landscape and buffering complies with the established requirements in Chapter 6 of this Title and receives approval with the site plan.

9. The Building and Fire departments inspect and approve all plans and uses.

CHAPTER 21
(created by Ordinance 12-12)

NS - NEIGHBORHOOD SERVICES

10-21-010: Purpose

10-21-020: Permitted Uses

10-21-030: Conditional Uses

10-21-040: Minimum Lot Standards

10-21-050: Off-Street Parking and Loading

10-21-060: Signs

10-21-070: Special Provisions

10-21-010: PURPOSE. The purpose of this Zone is to provide for a range of opportunities specifically identified as providing local neighborhood services. Uses in this zone are not meant to have a large footprint, or be overly invasive to neighboring uses.

10-21-020: PERMITTED USES. The following uses, and no others, are appropriate to this Zone, compatible with each other, and a permitted right provided that the parcel and buildings meet all other provisions of this Title, or any other applicable ordinances of Syracuse City, and receive site plan approval as provided in Section 10-4-090 of this Title.

(A) Accessory Uses and Buildings (under two hundred [200] square feet)

(B) Amusement and Recreational Activities (includes athletic or tennis club)

(C) Animal Clinics

(D) Business Services and Professional Offices

(E) Car Washes, Self-service Coin-operated Style and Full-Service Tunnel Style

(F) Churches, Synagogues, and Temples

(G) Commercial Outdoor Recreational Activities (family reunion center, outdoor reception facilities, picnic grounds, tennis courts, etc.)

(H) Financial Institutions

(I) Financial Planning, Investment Planning, Real Estate, and General Business Offices

(J) Fruit and Vegetable Stands

(K) Greenhouses

(L) Marriage and Family Counseling Services

(M) Optical Shops

(N) Preschool Centers

(O) Private Parks and Recreational Activities

(P) Professional Non-Retail Services

(Q) Public and Quasi-Public Buildings

(R) Public Parks

(S) Retail Building Materials, Hardware, and Farm Equipment

(T) Uses Considered Similar and Compatible by the Land Use Administrator

10-21-030: CONDITIONAL USES. The following, and not others, may be conditional uses permitted after application and approval as specified in Section 10-4-080 of this Title.

(A) Accessory Uses and Buildings (two hundred [200] square feet or greater) [Minor]

(B) Animal Hospitals [Major]

(C) Automotive and Engine Repair Services (excluding body repair) [Major]

(D) Automobile and Truck Sales and Rental [Major]

(E) Automotive Retail and Routine Maintenance Services [Major]

(F) Cabinet Making / Woodworking [Major]

(G) Community or Civic Services [Major]

(H) Contract Construction Services [Major]

(I) Convenience Store [Major]

(J) Day-Care Centers [Major]

(K) Equipment Rental, Sales, Service and Repair [Major]

(L) Hotels and Motels [Major]

(M) Light Industrial Uses (fabrication, assembly, treatment, or packaging operations conducted in a totally enclosed building using previously prepared materials) [Major]

(N) Medical and Other Health Facilities [Major]

(O) Packaging Operations/Delivery Facility [Major]

(P) Precision Equipment Repair [Major]

(Q) Printing and Publishing Industries [Major]

(R) Public Utility Substations, Generating Plants, Pumping Stations, and Buildings [Major]

(S) Restaurants and Fast Food Services [Major]

(T) Retail Trade, including equipment sales, service and repair [Major]

(U) Schools, Professional and Vocational [Major]

(V) Storage Facilities [Major]

(W) Temporary Commercial Uses (see Section 10-7-050) [Minor]

(X) Temporary Use of Buildings [Minor]

(Y) Theaters and Amusement Facilities [Major]

(Z) Wireless Communication Towers (See Chapter 26 of this Title) [Major]

10-21-040: MINIMUM LOT STANDARDS. All lots developed and all structures and uses placed on lots shall be in accordance with the following lot standards:

(A) Lot Area: Maximum of five (5) acres

(B) Lot Width: As required by site plan review

(C) Front Yard: Twenty (20) feet

(D) Side Yards: As required by site plan review

(E) Rear Yard: As required by site plan review

(F) Building Size: No greater than twenty thousand (20,000) square feet

(G) Building Height: Building height shall generally be no greater than thirty-five (35) feet. However, building heights in excess of thirty-five (35) feet may be equal to the horizontal distance from the nearest zone boundary line. Buildings within this Zone may be no closer than fifteen (15) feet from the zone boundary.

(H) Buffer Yards: All lots shall be subject to the general landscape requirements as prescribed in the 'Buffer Classification Requirements' table found in the "Buffer Yards' section of this Title.

(I) Minimum Lot Standards when adjacent to Residential or Institutional Zones.

1. Vehicles: Any new building that is constructed immediately adjacent to a residential zone shall be designed so that the loading and unloading of trucks is screened from that portion of the zone by the building. Dock orientation is prohibited on the side of the building facing the immediately adjacent residential zone.

2. Lighting: Any outdoor lighting is shielded so that the source is not directly visible from the residential zone and the lighting is directed down and away from the residential zone.

10-21-050: OFF-STREET PARKING AND LOADING. Off -street parking and loading shall be provided as specified in Chapter 8 of this Title unless the Planning Commission requirements exceed those of Chapter 8.

10-21-060: SIGNS. Signs permitted in this Zone shall be those allowed in industrial zones by Chapter 9 of this Title.

10-21-070: SPECIAL PROVISIONS.

(A) Landscaping. All lots, parcels, or sites shall have a minimum fifteen (15) percent of the total area landscaped, including all required front yards, and permanently maintained in good condition.

(B) Industrial Performance Standards. The following performance standards are intended to ensure that all industries will provide reasonable modern control methods to protect the City from hazards and nuisances; to set objective, quantitative standards for the maximum tolerated levels of frequently-hazardous or annoying emissions; and to protect any industry from arbitrary exclusion or persecution based solely on the characteristics of that type of industry's past uncontrolled operation.

1. General

(a) No land or building devoted to uses authorized by this Chapter shall be used or occupied in any manner that violates Subsection 2 of this Section.

(b) Traditional practices are allowed to support each specific type of business. This includes, but is not limited to, transportation, hours of operation, maintenance, etc.

(c) In addition to meeting other application requirements for site plan approval or a conditional use permit, parties seeking approval for a Neighborhood Services Zone use shall include in the application a description of the proposed machinery, products, and processes to be located at the development. If, in its opinion, the proposed use may violate Subsection 2 of this Section, the Planning Commission may refer the application for investigation and report to one or more expert consultants qualified to advise as to whether a proposed use will conform to the applicable performance standards specified in Subsection 10-21-070(B)2. Such consultant shall report as promptly as possible. A copy of such report shall be promptly furnished to the applicant. The cost of such expert report shall be borne by the applicant.

(d) Within twenty (20) days after the Commission receives the aforesaid application or report, if a report was required, or within such period as agreed to by the applicant, the Commission shall determine whether reasonable measures are being employed to assure compliance with the applicable performance standards. On such basis, the Commission may approve or refuse to approve the use or may require a modification of the proposed plans, construction specifications, device or operation, and shall so inform the Building Official.

(e) Any approval so issued shall evidence only that reasonable measures are being taken. It shall not relieve the applicant of the responsibility of meeting such standards when the business is actually in operation; and, in case of a failure to perform in accordance with standards, whatever additional devices or modifications in process shall be necessary to achieve full compliance with the standards shall be the sole responsibility of the applicant.

(f) The Land Use Administrator shall investigate any purported violation of performance standards as set forth in Subsection 2 of this Section; and, if necessary for such investigation, may request that the Planning Commission employ qualified experts. If, after public hearing and due notice, the Planning Commission finds that a violation has existed or does exist, it shall order the Land Use Administrator to serve notice that compliance with the performance standards must be achieved within a specified period of time or the business will be shut down. Should a violation of performance standards occur, the Planning Commission may order the offending plant to cease operation until proper steps are taken to correct the conditions causing the violation. The service of any qualified experts, employed by the Planning Commission to advise in establishing a violation, shall be paid by the violator if said violation is established, otherwise by the city.

2. Performance Standards. The determination of the existence of any of the following elements shall be measured at the lot line of the establishment or use.

(a) Noise. No use shall emit or cause the emission of sound from a stationary source or ground transportation creating a ninetieth percentile sound pressure level (L90) for any measured period (not less than 60 minutes) that exceeds 70 dB(A) from 7 a.m. to 10 p.m. or 55 dB(A) from 10 p.m. to 7 a.m.

(b) Vibration. No vibration (other than from transportation facilities or temporary construction work) shall be permitted which is discernible without instruments specified in Subsection 10-21-070(B)2.

(c) Odors. No emission of odorous gases or other odorous matter shall be permitted in such quantities as to be readily detectable when diluted in the ratio of one volume of odorous air to four volumes of clean air at the points of measurement specified in Subsection 10-21-070(B)2 or at the point of greatest concentration. Any process which may involve the creation or emission of any odors shall be provided with a secondary safeguard system, so that control will be maintained if the primary safeguard system should fail.

(d) Glare. No direct or sky-reflected glare, whether from flood lights or from high temperature processes such as combustion or welding or otherwise, shall be permitted to be visible at the points of measurement specified in Subsection 10-21-070(B)2. This restriction shall not apply to signs or lighting of buildings or grounds for advertising or protection otherwise permitted by the provision of this chapter.

(e) Fire and Explosion Hazards. All activities involving, and all storage of flammable and explosive materials shall be provided at any point with adequate safety devices against the hazard of fire and explosion and adequate fire fighting and fire suppression equipment and devices as required by the Uniform Fire Code, Uniform Fire Code Standards, and Life Safety Code.

(f) Air Pollution. No particulate or gaseous pollutants shall be emitted into the air in violation of the Utah Environmental Quality Code, its amendments, or resulting regulations.

(g) Liquid or Solid Wastes. No discharge at any point into a public sewer, public waste disposal system, private sewage system, or stream, or into the ground shall be allowed contrary to the Utah Environmental Quality Code, its amendments, or resulting regulations.

.

CHAPTER 22
(created by Ordinance 12-14)

BP - BUSINESS PARK

10-22-010: Purpose

10-22-020: Permitted Uses

10-22-030: Conditional Uses

10-22-040: Development Theme

10-22-050: Development Plan and Agreement Requirements

10-22-060: Minimum Lot Standards

10-22-070: Distance Between Buildings

10-22-080: Off-Street Parking and Loading

10-22-090: Signs

10-22-100: Design Standards

10-22-110: Architectural Review Committee

10-22-010: PURPOSE. The purpose of this zone is to provide areas primarily for planned general office and business park developments and related services that will be compatible with, enhance value of, and provide a transition to, nearby residential areas and will promote a quiet, clean environment. Development in this zone should emphasize a high level of architectural and landscape excellence. These zone districts will generally be established along high volume arterial streets in order to buffer the impacts of these streets from less intensive land uses. The intent is to create an attractive environment that will compliment, and serve as a transition to, surrounding land uses.

10-22-020: PERMITTED USES. The following are permitted uses by right provided the parcel and building meet all other provisions of this Title and any other applicable ordinances of Syracuse City and receive site plan approval as provided in Section 10-4-090 of this Title.

(A) Business Services and Professional Offices

(B) Churches, Synagogues, and Temples

(C) Data Processing Services

(D) Financial Institutions

(E) Hotels

(F) Printing and Publishing Industries

(G) Public or Quasi-Public Administrative Offices (excluding temporary or portable buildings)

(H) Public Parks

(I) Research Services

(J) Restaurants (sit-down only, no drive-throughs)

(K) Schools, Professional and Vocational

(L) Uses Considered Similar and Compatible by the Land Use Administrator

10-22-030: CONDITIONAL USES. The following, and not others, may be conditional uses permitted after application and approval as specified in Section 10-4-080 of this Title.

(A) Amusement and Recreational Activities (includes athletic or tennis club) [Major]

(B) Commercial Outdoor Recreation, Minor (family reunion center, outdoor reception facilities, picnic grounds, tennis courts, etc.) [Major]

(C) Commercial Testing Laboratories and Services

(D) Day-Care Centers [Major]

(E) Funeral Home [Major]

(F) Light Manufacturing as an accessory use (fabrication, assembly, treatment, or packaging operations conducted in a totally enclosed building using previously prepared materials) [Major]

(G) Preschool Centers [Major]

(H) Public Utility Substations, Generating Plants, Pumping Stations, and Buildings [Major]

(I) Storage/Warehousing, as an accessory use, as necessary to maintain a principal use. Not to exceed thirty-five (35) percent of the building. [Major]

10-22-040: DEVELOPMENT THEME. Development in this Zone shall conform to an approved development theme. The theme shall be prepared by the developer and recommended by the Planning Commission and approved by City Council, and shall conform to the provisions outlined in the area's Master Plan or overlay.

In addition to an approved development theme, this zone also requires a "Development Design Pattern Book," subject to the following standards:

(A) Development Design Pattern Book Approval: The development design pattern book shall be prepared by the developer and reviewed and approved by the Planning Commission in conjunction with a subdivision plan and/or site plan application.

(B) Development Design Pattern Book Submittal Requirements: The development design pattern book shall provide and address the following:

1. Written descriptions and graphic illustrations explaining how the development complements the physical form of the property and how the theme, standards, and guidelines found in this Chapter are to be integrated into the design of the development.

2. Written descriptions and graphic illustrations explaining the proposed conceptual architectural design, building elevations, and other such related design schemes; and

3. Written descriptions and graphic illustrations that clearly describe proposed open spaces, landscaping ideas, pedestrian pathways, furnishings, lighting and related entryway features and/or amenities.

(C) Effect of Development Design Pattern Book Approval: Upon acceptance of the development design pattern book by the City, further development activities, such as subdivision plan and site plan approval, shall comply with the development design pattern book.

10-22-050: DEVELOPMENT PLAN AND AGREEMENT REQUIREMENTS.

(A) Subdivision Ordinance requirements shall generally apply to Business Parks. The developer shall submit a development plan of all project phases for City consideration and approval and shall integrate the proposed development plan into a development agreement between the developer and City. The development agreement shall undergo an administrative review process to ensure compliance with adopted City ordinances and standards with approval by the City Council. The subdivider shall develop the property in accordance with the development agreement and current City ordinances, including the development requirements as identified within this Chapter, in effect on the approval date of the agreement, together with the requirements set forth in the agreement, except when Federal, State, County, and/or City laws and regulations, promulgated to protect the public's health, safety, and welfare, require future modifications which are rationally related to a legitimate government purpose.

(B) The development plan submitted for review shall show the location and building elevations with exterior building materials, size, and general footprint of all dwelling units and other main buildings and amenities.

(C) The development plan submitted for review shall include landscaping, fencing, and other improvement plans for common or open spaces, with the landscaping designed in accordance with an approved theme to provide unity and aesthetics to the project. The plan shall include all special features, such as ponds, fountains, signs, walking paths, inviting entryways, etc., together with a landscape planting plan. Open space should be a focal point for the overall design of the development.

(D) The proposed development shall show it will not be detrimental to the health, safety, or general welfare of persons residing adjacent to the proposed development.

(E) A Business Park shall be of sufficient size, composition, and arrangement to enable its feasible development as a complete unit, managed by a legally-established owners' association and governed by enforceable, duly recorded CC&Rs.

10-22-060: MINIMUM LOT STANDARDS. All lots developed and all structures and uses placed on lots shall be in accordance with the following lot standards. When adjacent to residential zoning an additional buffer of ten (10) feet is required.

(A) Lot Area: Minimum of one (1) acre

(B) Lot Width: As required by site plan review

(C) Front Yard: Fifteen (15) feet

(D) Side Yards: Twenty (20) feet or as required by site plan review

(E) Rear Yard: Twenty (20) feet or as required by site plan review

(F) Building Height: The height of buildings over thirty-five (35) feet may be equal to the horizontal distance from the nearest zone boundary line. Buildings thirty-five (35) feet high or less may be located within twenty (20) feet of the Zone boundary line. In determining height, exclude chimneys, flagpoles, church towers, and similar structures. The height of buildings shall be established in a format that is compatible with other buildings in the same business park.

10-22-070: DISTANCE BETWEEN BUILDINGS. In this Zone, where there is more than one (1) building constructed on a site, there shall be a minimum distance between structures of at least twenty (20) feet.

10-22-080: OFF-STREET PARKING AND LOADING. Off-street parking and loading shall be provided as specified in Chapter 8 of this Title.

10-22-090: SIGNS. Signs allowed in this Zone shall be provided as specified in Chapter 9 of this Title.

10-22-100: DESIGN STANDARDS. The Land Use Authority shall approve the required common-building theme. The design shall show detail in the unification of exterior architectural style, building materials, and color and size of each unit.

(A) Landscaping. In this Zone, the following landscaping requirements shall include:

1. A sprinkling system and plantings with substantial live plant material for the purpose of buffering, screening, and beautifying the site (Plant maturity landscaping should represent, as a minimum standard, compatibility with surrounding developed properties and uses with permanent maintenance by the owner or occupants).

2. A landscaped area of five (5) feet adjacent to off-street parking within required yard areas providing it does not abut residential zoning or uses (Landscaping in areas adjacent to residential uses shall be according to buffering requirements per Chapter 6 of this Title).

3. Landscaping installed in all park strips to the same standards as other on-site landscaping as well as a minimum of two (2) trees per every fifty (50) feet of frontage (Asphalt, paving stones, or brick or concrete paving in place of landscaping between the sidewalk and curb is prohibited).

4. Landscape covering at least fifteen (15) percent of the development site. Landscaping shall be installed prior to occupancy and maintained in good condition.

(B) Temporary buildings for intermittent commercial uses shall meet the provisions of the currently adopted edition of the International Building Code and must be sufficiently anchored to withstand a one hundred (100) mile per hour wind.

(C) Fencing. Where the site abuts a residential zone, a six- (6) foot high decorative texture solid-masonry wall shall be located along the property line. All fencing must comply with Chapter 6 of this Title.

(D) Outdoor storage is not allowed, except in a fully enclosed or screened manner.

(E) Trash Storage. A screened or otherwise enclosed area, or outside area designated for a trash dumpster or other trash-control device, shall be an integral part of the on-site buildings to keep the trash out of public view and prevent litter from scattering throughout the area. The building materials for dumpster enclosures shall be similar to those of the primary-use building.

(F) Lighting. The following provisions shall apply to installation, maintenance, and operation of outdoor lighting in this Zone:

1. All lights shall have shields to direct all light toward the earth's surface and away from reflective surfaces.

2. Light fixtures or lamps shall have shields or shades to direct incident rays away from all adjacent property.

3. Lights on poles shall not be taller than the building whose area they illuminate nor taller than fifteen (15) feet, whichever is shorter.

4. Any facilities requiring floodlights may not arrange the light(s) in such a way that it will shine towards roadways, onto adjacent residential property or residential use property, or into the night sky.

5. The placement of any light fixture shall be in such a manner that no light-emitting surface is visible from any residential area when viewed at ground level.

6. The level of lighting shall not exceed half- (0.5) foot-candles at any residential property line or one- (1.0) foot candles at any nonresidential property line.

7. Any canopy structure used at a business office location must have recessed lights with diffusers that do not extend below the surface of the canopy.

8. Any luminaire on a pole, stand, or mounted on a building must have a shield, an adjustable reflector, and a non-protruding diffuser.

(G) Commercial uses that require grease traps/interceptors shall locate such devices on the outside of the building and frequently and effectively service such devices to maintain them in satisfactory working order to protect the sanitary sewer system from excessive contaminants. A licensed hauler shall dispose of all materials removed from a grease trap/interceptor at an approved disposal site in a lawful manner. Commercial uses of used fryer oil shall dispose of such oil into a self-contained oil-rendering tank for disposal and transport. Outside or “refuse/dumpster” storage of oil-rendering barrels or other containers is prohibited.

(H) All utility transmission lines shall be placed underground. Transformers, meters and similar apparatus shall be at or below ground level and shall be screened from public view by a wall or fence, landscaping, earth berming, or special architectural treatment acceptable to the Planning Commission.

(I) All uses shall be free from objectionable or excessive odor, dust, smoke, noise, radiation or vibration.

10-22-110: ARCHITECTURAL REVIEW COMMITTEE. All proposed development plans within the Business Park zone shall be reviewed by the Architectural Review Committee. This

Committee shall function as a subcommittee of the Planning Commission and shall consist of seven (7) members appointed by the Planning Commission Chair, with the consent of the Planning Commission, to review development plans. Members shall be representatives of the community, City Council (City Council member shall be appointed by the Mayor), Planning Commission, and City staff. The Committee shall be responsible to review the plan, elevations, architectural details, and development design pattern book and make recommendations to the Planning Commission for consideration. The Planning Commission will, in turn, submit their recommendations to the City Council for final approval.

CHAPTER 23

RESEARCH PARK

10-23-010: Purpose

10-23-020: Permitted Uses

10-23-030: Conditional Uses

10-23-040: Minimum Lot Standards

10-23-050: Off-Street Parking

10-23-060: Signs

10-23-070: Special Provisions

10-23-010: PURPOSE. The purpose of this Zone is to provide and establish areas designed for technology research, scientific development, and business and academia collaboration research endeavors. All uses conducted in this Zone shall utilize well-designed, architecturally-appealing buildings surrounded with abundant landscape. The uses in this Zone shall promote a place where businesses and academia will collaborate to succeed and prosper through research and development. Uses in this Zone shall not have characteristics of heavy manufacturing such as excessive noise, light, pollution, and numerous heavy vehicles. This Zone shall act as a suitable and compatible buffer to adjoining residential and agricultural areas of use.

10-23-020: PERMITTED USES. The following uses are appropriate to this Zone, compatible with each other, and permitted by right provided that the parcel and buildings meet all other provisions of this Title, or any other applicable ordinances of Syracuse City, and receive site plan approval by the Syracuse City Council as provided in Section 10-4-090 of this Title. (Ord. 08-07)

(A) Agriculture

(B) Environmental Enhancement Facilities (composting, wetland biology, green waste recycling)

(C) Non-Hazardous Environmental and Educational Research Facilities

(D) Non-Hazardous Laboratories (testing, experimental, and scientific)

(E) Public and Quasi-Public Buildings and Public Utilities

(F) Sewage and Water-Treatment Facilities

(G) Uses Considered Similar and Compatible by the Planning Commission

10-23-030: CONDITIONAL USES. The following may be permitted as conditional uses after application and approval as specified in Section 10-4-080 of this Title. (Ord. 08-07)

(A) Accessory Uses and Buildings (two hundred [200] square feet or greater) [Minor] (Ord. 11-10)

(B) Public Parks [Major] (Ord. 11-10)

(C) Temporary Commercial Uses (see Section 10-7-050) [Minor] (Ord. 11-10)

(D) Wireless Communication Towers (See Chapter 26 of this Title) [Major] (Ord. 11-10)

10-23-040: MINIMUM LOT STANDARDS. All lots developed and all structures and uses placed on lots shall be in accordance with the following lot standards.

(A)	Lot Area:	Minimum one (1) acre
(B)	Lot Width:	One hundred fifty (150) feet
(C)	Front Yard:	As required by the site plan review
(D)	Side Yards:	Thirty (30) feet
(E)	Rear Yard:	Fifty (50) feet
(F)	Building Height:	Building height shall generally be no greater than forty-five (45) feet. However, building heights in excess of forty-five (45) feet may be equal to the horizontal distance from the nearest zone boundary line. Buildings within this Zone may be no closer than fifteen (15) feet from the zone boundary.

(G) Minimum distance between multiple structures on the same parcel of land shall be thirty (30) feet.

10-23-050: OFF-STREET PARKING. Off -street parking and loading shall be provided as specified in Chapter 7 of this Title. (Ord. 08-07)

10-23-060: SIGNS. Signs shall be those allowed in Research Park areas by Chapter 9 of this Title. (Ord. 08-07)

10-23-070: SPECIAL PROVISIONS. In addition to the foregoing regulations, all uses shall comply with the following requirements.

(A) Landscaping. All lots, parcels, or sites shall have a minimum ten (10) percent of the total area landscaped and permanently maintained in good condition. Landscape buffering shall comply with the requirements of section 10-5-080 of this Title. (Ord. 08-07)

(B) Enclosed Operations. All principal uses shall take place within enclosed buildings unless environmental-enhancement uses permitted herein receive approval via site plan review by the Land Use Authority.

(C) Outdoor Storage. There shall be no outdoor storage except for environmental-enhancement uses permitted herein.

(D) Buffering of differing land uses shall be provided as specified in Chapter 6 of this Title. (Ord. 06-17) (Ord. 08-07)

CHAPTER 24

ID - INDUSTRIAL DEVELOPMENT

10-24-010: Purpose

10-24-020: Permitted Uses

10-24-030: Conditional Uses

10-24-040: Minimum Lot Standards

10-24-050: Off-Street Parking and Loading

10-24-060: Signs

10-24-070: Special Provisions

10-24-010: PURPOSE. The purpose of this Zone is to provide for industrial, manufacturing, and certain compatible commercial uses and to protect such uses from encroachment of uses adverse to their operation and expansion. (1991)

10-24-020: PERMITTED USES. The following uses, and no others, are appropriate to this Zone, compatible with each other, and a permitted right provided that the parcel and buildings meet all other provisions of this Title, or any other applicable ordinances of Syracuse City, and receive site plan approval as provided in Section 10-4-090 of this Title. (1991) (Ord. 08-07) (Ord. 10-02)

(A) Agriculture

(B) Automotive and Engine Repair Services (Ord. 08-11)

(C) Car Washes, Self-service Coin-operated Style and Full-Service Tunnel Style. (Ord. 06-17) (Ord. 08-11) (Ord. 11-02)

(D) Churches, Synagogues, and Temples (Ord. 11-02)

(E) Contract Construction Services

(F) Manufacturing, chemicals, and allied products or plastic products (Ord. 11-02)

(G) Manufacturing, Compounding, Processing, Milling, Assembling, Testing, or Packaging (of the following products):

1. Apparel

2. Fabricated Metal Products (not including primary metals industries)

3. Food Products

4. Stone, Clay, and Glass

(H) Pawn Shops

(I) Payday Lending/Check Cashing Services (Ord. 10-02)

(J) Printing and Publishing Industries

(K) Professional Non-Retail Services (Ord. 11-02)

(L) Public and Quasi-Public Buildings

(M) Public Parks

(N) Rehabilitation Centers

(O) Restaurants and Fast Food Services

(P) Retail Building Materials, Hardware, and Farm Equipment

(Q) Storage Facilities, industrial warehouse (Ord. 11-02)

(R) Tattoo and Body Piercing Shops

(S) Uses Considered Similar and Compatible by the Land Use Administrator (Ord. 11-02)

(T) Welding or Machine Shop

(U) Wholesale Trade

10-24-030: CONDITIONAL USES. The following, and not others, may be conditional uses permitted after application and approval as specified in Section 10-4-080 of this Title. (1991) (Ord. 08-07) (Ord. 10-02)

(A) Accessory Uses and Buildings (two hundred [200] square feet or greater) [Minor] (Ord. 11-10)

(B) Day-care Centers [Major] (Ord. 11-10)

(C) Sexually-Oriented Businesses (see Chapter 27 of this Title) [Major] (Ord. 11-10)

(D) Temporary Commercial Uses (see Section 10-7-050) [Minor] (Ord. 11-10)

10-24-040: MINIMUM LOT STANDARDS. All lots developed and all structures and uses placed on lots shall be in accordance with the following lot standards:

(A)	Lot Area:	No minimum requirement
(B)	Lot Width:	As required by site plan review
(C)	Front Yard:	Thirty (30) feet
(D)	Side Yards:	As required by site plan review
(E)	Rear Yard:	As required by site plan review (Ord. 08-11)
(F)	Building Height:	Thirty-five (35) feet for buildings from zero (0) to one hundred (100) feet from the zone boundary; fifty-five (55) feet for buildings from one hundred (100) to two hundred (200) feet from the zone boundary; one hundred (100) feet for buildings more than two hundred (200) feet from the zone boundary. (Ord. 08-07) When an industrial lot is adjacent to or faces upon another non-industrial zone, the yards in the industrial zone that are

adjacent to or face upon the other non-industrial zone shall be a minimum of twenty (20) feet on all sides. Exceptions to this requirement may be granted by the Land Use Authority for industrial zones that are adjacent to other industrial zones or agricultural zones if all proposed structures on the industrial property meet minimum fire protection requirements. Plans showing these fire protection requirements are to be subject to review and approval by both the Syracuse City Building Official and Syracuse City Fire Chief. (Ord. 08-11)

All lots shall be subject to the general landscape requirements as prescribed in the 'Buffer Classification Requirements' table found in the 'Buffer Yards' section of this Title. (Ord. 08-11)

10-24-050: OFF-STREET PARKING AND LOADING. Off -street parking and loading shall be provided as specified in Chapter 8 of this Title unless the Planning Commission requirements exceed those of Chapter 8.(1991) (Ord. 08-07)

10-24-060: SIGNS. Signs permitted in this Zone shall be those allowed in industrial zones by Chapter 9 of this Title.(1991)

10-24-070: SPECIAL PROVISIONS.

(A) Landscaping. All lots, parcels, or sites shall have a minimum ten (10) percent of the total area landscaped, including all required front yards, and permanently maintained in good condition.

(B) Industrial Performance Standards. The following performance standards shall ensure that all industries will provide necessary modern control methods to protect the City from hazards and nuisances; set objective, quantitative standards for the maximum tolerated levels of frequently-hazardous or annoying emissions; and protect any industry from arbitrary exclusion or persecution based solely on the characteristics of that type of industry's past uncontrolled operation.

1. General

(a) No one shall use or occupy any land or building devoted to uses authorized by this Chapter in any manner so as to create a dangerous, injurious, noxious, or otherwise objectionable fire, explosive, or other hazard; noise or vibration; smoke, dust, odor, or other form of air pollution; heat, cold, dampness, glare, electrical, or other disturbance; liquid or solid refuse or waste; or other substance, condition, or element in such a manner or in such an amount as to affect adversely the surrounding area or adjoining premises. The foregoing are hereinafter referred to as "dangerous or objectionable elements."

(b) In addition to meeting other application requirements for site plan approval or a conditional use permit, parties seeking approval for an industrial use shall include in the application a description of the proposed machinery, products, and processes to be located at the development. The application shall include an investigation and report from a qualified consultant outlining all possible environmental impacts the industrial use may have. The cost of such expert report shall be borne by the applicant.

(c) Within twenty (20) days after the Commission receives the aforesaid application and report, the Commission shall determine whether the plans would employ reasonable measures to assure compliance with the applicable performance standards. On such basis, the Commission may approve or refuse to approve the use or may require a modification of the proposed plans.

2. Dangerous and Objectionable Elements

(a) Noise. No use shall emit or cause the emission of sound from a stationary source such that the one hour equivalent sound level L_{eq} of resultant sound measurement, at the lot line of the establishment or use, exceeds, by 6dba or more, the one hour equivalent sound level (L_{eq}) caused by ground transportation as estimated for that point of measurement and that time of day, pursuant to FHWA-RD-77-108 Highway Traffic Noise Prediction Model or by other techniques at least as accurate. The sound level measuring instrumentation shall conform with ANSI S1.4-1971 Type 1 and compatible measurement procedures, according to ANSI S1.13-1971, with the following adjustments:

i. Adjustment for Temporal and Tonal Characteristics of Sound. If the sound has a pronounced audible-tonal quality, such as a whine, screech, buzz, or hum, or an audible cyclic variation in sound level, such as beating or other amplitude modulation, the measured sound level shall increase by 5 db to allow for more subjective response to the sound.

ii. Quasi-Steady Impulsive Sound. Where the sound is of a repetitive impulse nature, providing a steady reading using the "slow response" setting on the sound level meter, the measured value shall increase by 10 db to allow for more subjective response to the sound.

Only one of the paragraphs (i) or (ii) may apply to qualify for an adjustment. In a case where both paragraphs apply, paragraph (ii) takes precedence.

No use shall emit, cause, or permit the emission of sound of an impulsive nature from a stationary source such that it results in an impulsive sound level at a point of measurement in excess of 80 db or, in a one hour equivalent level (L_{eq}), exceeding that one hour equivalent level (L_{eq}) caused by ground transportation as estimated for that point of measurement and that time of day, pursuant to FHWARD-77-108 or equivalent method.

(b) Vibration. No use shall create or permit a vibration (other than from transportation facilities or temporary construction work) that is discernible without instruments at the points of measurement specified in Subsection 10-24-070(B)2(a). (Ord. 08-07)

(c) Odors. No use shall emit odorous gases or other odorous matter in such quantities as to be readily detectable when

diluted in the ratio of one (1) volume of odorous air to four (4) volumes of clean air at the points of measurement specified in Subsection 10-21-7(B)2(a) or at the point of greatest concentration. Any process that may involve the creation or emission of any odors shall provide a secondary safeguard system in order to maintain control should the primary safeguard system fail. (Ord. 08-07)

(d) Glare. No use shall permit direct or sky-reflected glare that penetrates beyond the property upon which the light source is located, whether from flood lights or from high-temperature processes such as combustion or welding or otherwise, in a manner constituting a nuisance or hazard.

(e) Fire and Explosion Hazards. All activities and all storage of flammable and explosive materials shall include adequate safety, fire-fighting, and fire-suppression equipment and devices standard in the industry to protect against the hazard of fire and explosion. No use shall permit the burning of waste materials in open fires at any point. (Ord. 08-07)

(f) Air Pollution. No use shall emit particulate or gaseous pollutants into the air in violation of the Utah State Air Conservation Act, its amendments, or resulting regulations.

(g) Liquid or Solid Wastes. No use shall discharge, at any point, into a public sewer, public waste-disposal system, private sewage system, or stream, or into the ground contrary to the Utah State Water Pollution Control Act, its amendments, the subsequent Wastewater Disposal Regulations, or the Utah Code of Solid Waste Disposal Regulations. (1991)

(C) Enforcement. The Land Use Administrator shall investigate any purported violation of performance standards and, if necessary for such investigation, may request the Planning Commission to employ qualified experts. If, after public hearing and due notice, the Planning Commission finds that a violation existed or does exist, it shall order the Land Use Administrator to serve notice that compliance with the performance standards must be achieved within a specified period of time or the plant will be closed. Should the violation of performance standards threaten the public health, convenience, or welfare, the Planning Commission may order the offending plant to cease operation until proper steps are taken to correct the conditions which cause the violation. The violator shall pay for services of any qualified experts, employed by the Planning Commission to advise in establishing a violation, upon establishment of said violation or the City shall pay otherwise. The determination of the existence of dangerous and objectionable elements shall be made at any point provided, however, the measurements of the noise, vibration, odors, or glare, are taken at the lot line of the establishment or use.

CHAPTER 25

SENSITIVE AREA OVERLAY

10-25-010: Purpose

10-25-020: Preliminary Requirements

10-25-030: Development Requirements

10-25-040: Construction Requirements

10-25-050: Approval

10-25-010: PURPOSE. This Zone is the land area within the Syracuse City corporate boundary west of Bluff Road. The General Plan identifies this as an area and as future annexation areas where soil and water conditions may impact, prohibit, or limit development. In addition to requirements outlined in the City's Subdivision Ordinance, developers shall adhere to more detailed and specific information and construction standards to adequately address soil and water conditions prior to approval and construction of a development within the area. These are minimum requirements. Approval may require additional measures where soil and water conditions warrant them. (Ord. 06-17)

10-25-020: PRELIMINARY REQUIREMENTS. Any proposed development within this Zone as identified shall include the following items with a completed application and plans for sketch or site plan approval:

(A) Wetland delineation approved by the Army Corps of Engineers of all the property within the ownership or control of the developer within the proposed development area.

(B) A detailed soil analysis, completed by a licensed geotechnical engineer that includes soil types and conditions as well as ground-water level test results, monitored for not less than six (6) months.

(C) A geotechnical engineered plan for construction and installation of all off-site improvements including, but not limited to, ground and road stabilization as well as design standards for all structure development within the overlay zone.

(D) Proposed method of routing irrigation or drainage water that is currently being collected from the property.

(E) Proposed lot drainage plan as required by Section 10-25-040.

10-25-030: DEVELOPMENT REQUIREMENTS.

(A) In order to calculate the net density for residential development, deduct twenty (20) percent of the gross acreage (for roads and other public rights-of-way or easements), and then deduct the total acreage identified by the Army Corps of Engineers as wetlands, without regard as to whether mitigation will be addressed on-site or off-site. Finally, multiply the adjusted net acreage by the density factor for the appropriate residential zone. (Ord. 08-07)

(B) The City shall have the discretion, in cooperation with the Army Corps of Engineers and other wetland conservation entities, of determining whether to mitigate wetlands on-site or off-site.

(C) Calculations for determining open space under provisions outlined in Chapter 15 shall not include any areas previously identified as wetlands. (Ord. 08-07)

(D) The City shall require the developer to submit a soil report prepared by a licensed geotechnical engineer for all development within this Zone. The soil report shall include a unified classification of all soils with an estimate of susceptibility to erosion, plasticity index, liquid limit, shrink-swell potential, general suitability for development, and an estimate of the likely highest level of the sub-surface water table considering the long-term effects of development and irrigation.

(E) The developer shall submit load designs for all roadways together with a de-watering plan within the proposed development area. A licensed geotechnical engineer shall prepare, stamp, and sign the load design and dewatering plan presented to the City for final review of the subdivision. (Ord. 06-17)

10-25-040: CONSTRUCTION REQUIREMENTS.

(A) Prior to issuance of building permits, the City shall require the developer or his selected contractor to perform a CCTV video inspection of all gravity-initiated utilities to confirm pipe workmanship meets City and American Society of Testing and Materials (ASTM) requirements. The City may require follow-up video inspections to confirm completion of necessary repairs identified during previous inspections.

(B) The developer shall construct all (including residential dwellings) improvements based upon the submitted design standards of the project soils engineer report and comply with design recommendations from the City Engineer and Syracuse City Code, Title VIII. The design requirement submitted by the project soils engineer shall not be less in scope and consistency than the requirement in Syracuse City Code, Title VIII and Title VIII Construction Appendix.

(C) The International Residential Building Code requires each lot to drain surface water from all sides of residential structures. Construction of walks, driveways, retaining walls, and other landscape improvements shall not interfere with protected public utility and drainage easements. Roofs shall direct roof water to a downspout and away from foundation walls toward a suitable swale or drainage ditch. Surface drainage design shall follow the minimum guidelines set forth in the International Residential Building Code. The property owner shall maintain surface drainage grades to ensure proper storm water conveyance. In cases where minimum slopes or distances are unattainable, the lot shall have paved gutters or other drainage structures acceptable to the Building Official.

(D) Residential dwelling structures shall have roof drainage systems (gutters, downspouts, channels, etc.) and appurtenances contiguous to the entire zone of collection from said roof surface and to direct the roof/drainage water away from such structures and foundation walls.

(E) Construction of drainage fields, French-drainage systems, or de-watering stations shall comply with design standards submitted by a licensed Geotechnical Engineer as approved by the City.

10-25-050: APPROVAL. The City Engineer shall review and verify compliance with preliminary requirements outlined in Section 10-25-020 prior to sketch plan submittal to the Land Use Authority. (Ord. 06-17)

CHAPTER 26

WIRELESS TELECOMMUNICATIONS

10-26-010: Purpose

10-26-020: Definitions

10-26-030: Site Plan Requirements

10-26-040: Building Permits

10-26-050: Antenna Site Locations

10-26-060: Co-Location Requirement

10-26-070: Lease Agreements for Use of City Land

10-26-080: Standards for Antennas and Antenna-Support Structures

10-26-090: Additional Conditional Use Permit Considerations

10-26-100: Additional Regulations for Monopoles and Towers

10-26-110: Safety Requirements

10-26-120: Abandonment

10-26-130: Site Requirements

10-26-010: PURPOSE.

(A) The purposes of this Chapter are to:

1. Minimize the impacts of wireless communications facilities on surrounding areas by establishing standards for location, structural integrity, and area compatibility

2. Encourage the location and co-location of wireless communication equipment on existing structures, thereby minimizing new visual, aesthetic, and public-safety impacts, effects upon the natural environment, and the need for additional antenna-supporting structures

3. Encourage coordination between suppliers of wireless communication services in the City

4. Respond to the policies embodied in the Telecommunications Act of 1996 in such a manner as to avoid unreasonable discrimination between providers of functionally-equivalent personal wireless services or to prohibit personal wireless services in the City

5. Protect the neighborhood character and values of the City's residential zoning districts~~,~~ while meeting the needs of its citizens to enjoy the benefits of wireless communication services

6. Encourage the use of public lands, buildings, and structures as locations for wireless telecommunications infrastructure as a method to establish a precedence of quality concealment products that minimize

the aesthetic impact of related infrastructure that generates beneficial revenue to the City and its citizens

(B) Siting Alternatives Hierarchy. Siting of a Wireless Communications Facility shall be in accordance with Section 10-26-5 and the following siting alternatives hierarchy: (Ord. 08-07)

1. Concealed attached wireless communications facility on:

   (a) City-owned property

   (b) Other publicly-owned property

   (c) Privately-owned property

2. Co-location or combining on an existing antenna-supporting structure facility-on:

   (a) City-owned property

   (b) Other publicly-owned property

   (c) Privately-owned property

3. Freestanding, concealed or non-concealed, wireless communications facility-on:

   (a) City-owned property

   (b) Other publicly-owned property

   (c) Privately-owned property

The order of ranking preference, from highest to lowest, shall be 1, 2, and 3 and then a, b, and c within each preference. When proposing a lower-ranked alternative, the applicant shall file relevant information by affidavit by a radio-frequency engineer demonstrating that, despite diligent efforts to adhere to the established hierarchy within the Syracuse City boundaries, higher-ranked options are not technically feasible, practical, or justified given the location of the proposed wireless communications facility and the existing uses for the subject and surrounding properties within three hundred thirty (330) feet of the subject property. Where the City permits a freestanding wireless communications facility, the applicant shall file a written report providing relevant information that demonstrates higher-ranked locations are not technically feasible, practical, or justified given the location of the proposed wireless communications facility and the existing land uses of the subject and surrounding properties within five hundred (500) feet of the subject property.

(C) Exemptions. Non-commercial amateur radio antennas, ham radios, or citizens' band antenna-supporting structures, satellite-dish antennas, government-owned wireless communications facilities (upon declaration of a state of emergency by federal, state, or local government), antenna-supporting structures, antennas, and/or antenna arrays for AM/FM/TV/HDTV broadcasting transmission facilities licensed by the FCC. (Ord. 04-20)

10-26-020: DEFINITIONS. The following words shall have the described meaning when used in this Chapter, unless a contrary meaning is apparent from the context of the word. (2001)

(A) ANTENNA. Any apparatus designed for the transmitting and/or receiving of electromagnetic waves including but not limited to telephonic, radio, internet, or television communications. Types of elements include, but are not limited to: omni-directional antennas, sectorized (panel) antennas, multi or single bay, yagi, or parabolic dish or ball antennas. (Ord. 04-20)

(B) ANTENNA-SUPPORT STRUCTURES. Any structure used for the purpose of supporting antenna(s).

(C) CITY. Syracuse City, Utah.

(D) CITY-OWNED PROPERTY. Real property owned, leased, or controlled by or for the City.

(E) CO-LOCATION. The location of an antenna on an existing structure, tower, or building that is already being used for personal wireless-services facilities.

(F) GUYED TOWER. A tower that supports an antenna or antennas and requires guy wires or other stabilizers for support.

(G) LATTICE TOWER. A self-supporting, three (3) or four- (4) sided, open steel- or wood-frame structure used to support telecommunications equipment.

(H) MONOPOLE. A single, self-supporting cylindrical pole, constructed without guy wires or ground anchors, that acts as the support structure for antennas.

(I) MONOPOLE ANTENNA WITH PLATFORM. A monopole with antennas and an antenna-support structure that exceeds three (3) feet in width or ten (10) feet in height.

(J) MONOPOLE ANTENNA WITH NO PLATFORM. A monopole with antennas and an antenna-support structure that does not exceed three (3) feet in width or ten (10) feet in height.

(K) PERSONAL WIRELESS SERVICES. Commercial mobile-telecommunications services, unlicensed wireless-telecommunications services, common carrier wireless telecommunications exchange-access services, and commercial wireless computer-Internet services provisions. (Ord. 03-08)

(L) PERSONAL WIRELESS-SERVICES ANTENNA. An antenna used in connection with the provision of personal wireless services.

(M) PERSONAL WIRELESS-SERVICES FACILITIES. Facilities for the provision of personal wireless services, which include transmitters, antennas, structures supporting antennas, associated wiring and connections, and electronic equipment typically installed in close proximity to a transmitter or receiver. (Ord. 03-08)

(N) PRIVATE PROPERTY. Any real property not owned by the City, even if the property is owned by another public or governmental entity.

(O) ROOF-MOUNTED ANTENNA. An antenna or series of individual antennas mounted on a roof, mechanical room, or penthouse of a building or structure.

(P) STEALTH FACILITIES. Personal wireless-services facilities designed to be compatible with the natural setting and surrounding structures and which camouflage or conceal the presence of antennas and/or towers. The term includes, but is not limited to, clock towers, church steeples, light poles, flag poles, signs, electrical transmission facilities, and water tanks.

(Q) TOWER. A freestanding structure, such as a monopole tower, lattice tower, or guyed tower, used as a support structure for antenna(s).

(R) WALL-MOUNTED TOWER. An antenna or series of individual antennas mounted on the vertical wall of a building or structure

(S) WHIP ANTENNA. An antenna that is cylindrical in shape. Whip antennas can be directional or omni-directional and vary in size depending on the frequency and gain for which they are designed

(T) WIRELESS COMMUNICATIONS. Any personal wireless service that includes, but is not limited to, cellular, personal communication services (PCS), specialized mobile radio (SMR), enhanced specialized mobile radio (ESMR), unlicensed spectrum services utilizing Part 15 devices (i.e. wireless internet), and paging.

10-26-030: SITE PLAN REQUIREMENTS. Any person desiring to develop, construct, or establish a personal wireless-service facility in the City shall submit a conditional use application and site plan to the City for approval. The City shall only consider complete applications, which shall include the following:

(A) A conditional use and site plan review fee that has been established by the City's schedule of fees. (Ord. 09-16)

(B) Site plan, as described in Chapter 4 of this Title, which shall include the following: (Ord. 08-07)

1. Vicinity map containing sufficient information to accurately locate the property shown on the plan

2. Footprints of existing and proposed buildings and structures, including a notation of each unit's height above the grade

3. Location and size of existing and proposed buildings and structures, including a notation of each unit's height above the grade and dimensions of space, cabinets, or rooms within residential structures used to provide computer-Internet service provisions or equipment

4. Location and size of existing and proposed antennas with dimensions to property lines

5. Location of existing or proposed fire-protection devices

6. Location and description (height, materials) of existing and proposed fences.

7. Location and description (dimensions, distance to property lines, and type) of lighting (direct or indirect)

8. A security lighting plan, if proposed

9. A signed lease agreement with the City if the site is located on City property

(C) The application shall include written descriptions regarding:

1. Maintenance. A description of the anticipated maintenance needs for the facility, including frequency of service, personnel needs, equipment needs, and traffic ingress and egress points for the facility.

2. Service Area. A description of the service area for the antenna or tower and a statement as to whether the antenna or tower is needed for coverage or capacity.

3. Location. A map showing the site and the nearest telecommunications facility sites within the network, a description of the distance between the telecommunications facility sites, and a description of how this service area fits into the service network.

4. Liaison. The name, address, telephone number, and fax number of a contact person who can respond to questions concerning the application and the proposed facility. (Ord. 03-08)

10-26-040: BUILDING PERMITS.

(A) General Requirements. Applicants shall obtain a building permit from the City prior to the construction of any tower or antenna-support structure. The City shall not issue a building permit for any project requiring a site plan, amended site plan, or conditional use permit until after the approval of such site plan, amended site plan, or conditional use permit by the appropriate authority.

(B) Requirements for Monopoles and Towers. If the applicant is constructing a monopole or other tower-type structure, the applicant shall submit a written report from a qualified structural engineer, licensed in the State of Utah, documenting the following:

1. Height and design of the monopole or tower, including technical and engineering factors governing the selection of the proposed design

2. Seismic-load design and wind-load design for the monopole or tower

3. Total anticipated capacity of the monopole or tower, including number and type of antennas it could accommodate

4. Structural failure characteristics of the monopole or tower and a demonstration that the site and setbacks are of adequate size to contain debris

5. Soil investigation report, including structural calculations

6. Electrical design end loads provided according to the Electrical Code as adopted by State law (2001) (Ord. 08-07)

10-26-050: ANTENNA SITE LOCATIONS. The City Council shall authorize the location of Wireless Service Antennas on public or private property within designated industrial, commercial, agricultural, or open space zones of the City at said site as indicated in the Siting Alternatives Hierarchy Section contained herein. (Ord 04-20)

10-26-060: CO-LOCATION REQUIREMENT. Unless otherwise authorized by the City Council for good cause shown, the design and construction of every new monopole shall be of sufficient size and capacity to accommodate at least one additional wireless-telecommunications provider on the structure in the future. Any conditional use permit

for the monopole may require an agreement of the applicant to allow co-location of other personal wireless providers on such terms as are common in the industry. (2001)

10-26-070: LEASE AGREEMENTS FOR USE OF CITY LAND. The City shall enter into a standard lease agreement with the applicant for any facility built on City property. The Mayor or the Mayor's designee shall have the authority to execute the standard lease agreement on behalf of the City. The Lease shall contain the condition that applicant acquire site plan and/or conditional use permit approval from the Land Use Authority before the Lease can take effect~~,~~ and that failure to obtain such approval renders the Lease null and void. (2001) (Ord. 11-02)

10-26-080: STANDARDS FOR ANTENNAS AND ANTENNA-SUPPORT STRUCTURES. The type or location of the antenna structure characterizes personal wireless-services facilities. There are five (5) general types of antenna structures contemplated by this Chapter: wall-mounted antennas; roof-mounted antennas; monopoles with no platform; monopoles with a platform; and stealth facilities. If this Chapter allows a particular type of antenna structure as a permitted or conditional use, the minimum standards for that type of antenna are as follows, unless otherwise provided in a conditional use permit:

(A) Wall-Mounted Antennas.

1. Maximum height. Wall-mounted antennas shall not extend above the roof line of the building or structure or extend more than four (4) feet horizontally from the face of the building.

2. Setback. Wall-mounted antennas shall not locate within one hundred (100) feet of any residence.

3. Mounting Options. Antennas mounted directly on existing parapet walls, penthouses, or mechanical-equipment rooms are considered wall-mounted antennas if no portion of the antenna extends above the roof line of the parapet wall, penthouse, or mechanical-equipment room. Whip antennas are not allowed on a wall-mounted antenna structure.

(B) Roof-Mounted Antennas.

1. Maximum height. The maximum height of a roof-mounted antenna shall be ten (10) feet above the roof line of the building

2. Setback. Roof-mounted antennas shall be located at least five (5) feet from the exterior wall of the building or structure and at least fifty (50) feet from any neighboring residential structure.

3. Mounting Options. Antennas mounted directly on existing parapet walls, penthouses, or mechanical equipment rooms are considered wall mounted antennas if no portion of the antenna extends above the roof line of the parapet wall, penthouse, or mechanical equipment room. Whip antennas are not allowed on a wall mounted antenna structure.

(C) Monopoles with no platform.

1. Maximum Height and Width. The maximum height of the monopole antenna shall be seventy-five (75) feet, although the approving body may allow an antenna or antenna-support structure up to one hundred ten (110) feet in height if the applicant demonstrates to the satisfaction of the approving body that the additional height is necessary to obtain coverage or allow co-location and that the applicant has taken steps to

mitigate adverse effects on the surrounding neighborhood. The entire antenna structure mounted on the monopole shall not exceed three (3) feet in width. The antenna itself shall not exceed ten (10) feet in height.

2. Setback. Monopoles shall be set back a minimum one hundred ten (110) percent of the height of the monopole from any residential lot line, measured from the base of the monopole to the nearest residential lot line.

(D) Monopoles with Platform.

1. Maximum Height and Width. The maximum height of the monopole antenna shall be seventy-five (75) feet, although the approving body may allow an antenna or antenna-support structure up to one hundred ten (110) feet in height if the applicant demonstrates to the satisfaction of the approving body that the additional height is necessary to obtain coverage or allow co-location and that the applicant has taken steps to mitigate adverse effects on the surrounding neighborhood. The antennas and antenna-mounting structures on the monopole shall not exceed eight (8) feet in height or fifteen (15) feet in width. The antenna itself shall not exceed ten (10) feet in height.

2. Setback. Monopoles shall be set back a minimum one hundred ten (110) percent of the height of the monopole from any residential lot line, measured from the base of the monopole to the nearest residential lot line.

(E) Stealth Facilities. Maximum Height. The maximum height of a stealth facility shall be the maximum structure height permitted in the zoning district wherein the stealth facility will be located. The applicant may exceed the maximum structure height if allowed pursuant to a conditional use permit. Ord. 03-08)

10-26-90: ADDITIONAL CONDITIONAL USE PERMIT CONSIDERATIONS. In addition to the City's standard conditional use permit considerations, the City shall consider the following factors when deciding whether to grant a conditional use permit for a personal wireless-services facility:

(A) Compatibility. The facility or antenna shall be compatible with the height, mass, and design of buildings, structures, neighborhood aesthetics, and uses in the vicinity of the facility.

(B) Screening. The facility or antenna shall use existing or proposed vegetation, topography, or structures in a manner that effectively screens the facility.

(C) Disguise. The facility or antenna shall include a disguise that mitigates potential negative impacts on surrounding properties.

(D) Parcel Size. The parcel upon which the facility or antenna will be located shall be of sufficient size to adequately support the facility.

(E) Location on Parcel. The structure or antenna shall be located on the parcel in a manner that can best protect the interests of surrounding property owners but still accommodate other appropriate uses of the parcel.

(F) Co-Location. The applicant shall be willing to allow co-location on its facility by other personal wireless-services providers on such terms as are common in the industry. (Ord. 03-08)

10-26-100: ADDITIONAL REGULATIONS FOR MONOPOLES AND TOWERS.

(A) Distance from other Monopoles. Monopoles and towers shall be located at least one thousand (1,000) feet from each other except upon showing of necessity by the applicant, or upon a finding by the City, that a closer distance would adequately protect the health, safety, and welfare of the community. This distance requirement shall apply to stealth facilities or to antennas attached to lawful structures such as transmission towers, utility poles, outdoor lighting structures, and water tanks.

(B) Location on Parcel. Monopoles shall be located as unobtrusively on a parcel as possible, given the location of existing structures, nearby residential areas, and service needs of the applicant. Monopoles shall not be located in a required landscaped area, buffer area, or parking area. (2001)

10-26-110: SAFETY REQUIREMENTS.

(A) Regulation Compliance with FCC and FAA Regulations. All operators of personal wireless-services facilities shall demonstrate compliance with applicable Federal Communication Commission (FCC) and Federal Aviation Administration (FAA) regulations, including FCC radio frequency regulations, at the time of application and periodically thereafter as requested by the City. Failure to comply with the applicable regulations shall be grounds for revoking a site plan or conditional use permit approval.

(B) Protection Against Climbing. Monopoles shall be protected against unauthorized climbing by removal of the climbing pegs from the lower twenty (20) feet of the monopole.

(C) Fencing. Applicant shall fully enclose all monopoles and towers with a minimum six (6) foot tall fence or wall, as directed by the City.

(D) Security Lighting Requirements. Monopoles and towers shall comply with the FAA requirements for lighting. As part of the conditional use permit consideration, the City may also require security lighting for the site. If using security lighting, the applicant shall minimize the lighting impact on surrounding residential areas by using indirect lighting, where appropriate. (2001)

10-26-120: ABANDONMENT. The City may require the removal of all antennas and monopoles if the facility has been inoperative or out of service for more than twelve (12) consecutive months.

(A) Notice. Notice to remove shall be given in writing by personal service or by certified mail addressed to the last known applicant.

(B) Violation. Failure to remove the antennas and monopoles as instructed after receiving written notice to remove the same is a violation of the terms of this Chapter. The City may initiate criminal and/or civil legal proceedings against any person, firm, or corporation, whether acting as principal, agent, property owner, lessee, lessor, tenant, landlord, employee, employer, or otherwise, for failure to remove antennas and monopoles in accordance with this Chapter. Any lease agreement with the City shall also stipulate that failure to remove the antennas and monopoles after receiving written notice to do so pursuant to this Chapter automatically transfers ownership of the antennas, monopoles, support buildings, and all other structures on the site to the City. (2001)

10-26-130: SITE REQUIREMENTS.

(A) Regulations for Accessory Structures.

1. Storage Areas and Solid-Waste Receptacles. The site shall not permit any outside storage of solid-waste receptacles.

2. Equipment Enclosures. All electronic and other related equipment and appurtenances necessary for the operation of any personal wireless-services facility shall, whenever possible, be located within a lawfully pre-existing structure or completely below grade. When a new structure is necessary to house such equipment, the structure shall blend with the natural features, buildings, and structures in the zone wherein the facility will be located.

3. Accessory Buildings. Freestanding accessory buildings used with a personal wireless-services facility shall not exceed four hundred fifty (450) square feet and shall comply with the setback requirements for structures in the zone wherein the facility will be located.

(B) Parking. The City may require a minimum of one (1) parking stall for sites containing a monopole, tower, and/or accessory buildings, if there is insufficient parking available on the site.

(C) Landscaping. Applicants shall landscape all sites with personal wireless-services facilities per conditions of approval by the City Planning Commission.

(D) Maintenance Requirements. Applicants shall maintain all personal wireless-services facilities in a safe, neat, and attractive manner. (2001)

CHAPTER 27

LOCATION OF SEXUALLY-ORIENTED BUSINESSES

10-27-010: Purpose

10-27-020: Definitions

10-27-030: Location of Business - Restrictions

10-27-040: Signs

10-27-010: PURPOSE. The purposes and objectives of this Chapter are to establish reasonable and uniform regulations to prevent the concentration of sexually-oriented businesses or their locations in areas deleterious to the City, regulate the signage of such businesses, control the adverse affects of such signage, and prevent inappropriate exposure of such businesses to the community. This Chapter shall be construed as a regulation of time, place, and manner of the operation of these businesses, consistent with the United States and Utah Constitutions.

10-27-020: DEFINITIONS. The terms involving sexually-oriented businesses that this Title does not define shall have the meanings set forth in Title V, Chapter 4, Business License Regulations, of the Syracuse City Municipal Code.

10-27-030: LOCATION OF BUSINESS - RESTRICTIONS. Except as provided in this Chapter, no one shall use any building, structure, or land for the establishment or operation of a sexually-oriented business. A person commits an offense if the person operates, or causes to be operated, a sexually-oriented business in violation of the provisions of this Chapter.

(A) Sexually-oriented businesses shall only be permitted as a conditional use in the areas of Syracuse City zoned Industrial. (Ord. 11-02)

(B) All sexually oriented businesses shall be subject to the following restrictions:

1. No sexually-oriented businesses shall be located within one thousand (1,000) feet of:

(a) A church, synagogue, mosque, or building used primarily for religious worship and related religious activities

(b) A public or private educational or learning facility including but not limited to child day-care facilities, nursery schools, pre-schools, kindergartens, elementary schools, private schools, intermediate schools, high schools, vocational schools, secondary schools, continuation schools, special education schools, junior colleges, libraries, and universities-(School includes the school grounds but does not include facilities used primarily for another purpose and only incidentally as school)

(c) A public park or recreational area designated for park or recreational activities including, but not limited to, a park, playground, nature trails, city path ways or trails, swimming pools, athletic fields, basketball or tennis courts, pedestrian/bicycle paths, or other similar public land within the

City that is under the control, operation, or management of the City Park and Recreation authorities

(d) An entertainment business that is oriented primarily towards children or family entertainment

(e) A boundary of a residential (R-1, R-2, R-3, R-4, or PRD) zone-or agriculture (A-1) zone district as defined in the Syracuse City Land Use Ordinance

(f) The property line of a lot devoted to a residential use as defined in the Syracuse Land Use Ordinance

2. A person commits a misdemeanor if that person causes or permits the operation, establishment, substantial enlargement, or transfer of ownership or control of a sexually-oriented business:

(a) Within one thousand (1,000) feet of another sexually-oriented business

(b) Within one thousand (1,000) feet of any gateway corridor or major roadway entry into Syracuse City. Such distance shall be measured from the right-of-way boundary

3. For the purpose of this Section, measurements shall be made in a straight line, without regard to the intervening structures or objects, from the nearest portion of the building or structure used as part of the premises for a sexually-oriented business to the nearest property line of the premises of a use listed in Subsection 2. Presence of a City, County, or other political subdivision boundary shall be irrelevant for purposes of calculating and applying~~,~~ the distance requirements of this Section.

4. For the purpose of this Section, the distance between any two (2) sexually-oriented businesses shall be measured in a straight line, without regard to the intervening structures or objects or political boundaries, from the closest exterior wall of the structure wherein each business will locate. (Ord. 06-17)

10-27-040: SIGNS. If any of the provisions of this Section conflict with the provisions set forth in Chapter 8 of this Title, the more restrictive requirements for signs shall prevail. Signs for sexually-oriented businesses shall be limited as follows: (Ord. 08-07)

(A) The building shall have no more than one exterior sign.

(B) No sign shall exceed eighteen (18) square feet.

(C) No animation shall be permitted on or around any sign or on the exterior walls, doors, openings or roof of such premises.

(D) No descriptive art or designs depicting any activity related to or inferring the nature of the business shall be on or around any sign. Said signs shall contain alphanumeric copy only.

(E) Signs shall be only flat wall signs and/or awning signs.

(F) There shall be no painted wall advertising.

(G) Other than signs specifically allowed by this Chapter, sexually-oriented businesses shall not attach, construct, or allow the attachment or construction

of any temporary signs, banners, lights, or other devices designed to draw attention to the business location.

SYRACUSE CITY ENGINEERING STANDARDS AND CONSTRUCTION SPECIFICATIONS

January 2012

SYRACUSE CITY
EST. 1935

Updated 2-14-2012, R12-04

TABLE OF CONTENTS

DIVISION 1: GENERAL REQUIREMENTS 3

DIVISION 2: TRENCH EXCAVATION AND BACKFILL 12

DIVISION 3: CULINARY WATER 19

DIVISION 3A: PRESSURE IRRIGATION 33

DIVISION 4: CONCRETE PIPE 42

DIVISION 4A: PVC PLASTIC PIPE 47

DIVISION 4B: POLYETHYLENE CORRUGATED PIPE 53

DIVISION 5: MANHOLES 58

DIVISION 6: VALVES, COUPLINGS, AND FIRE HYDRANTS 62

DIVISION 7: EARTHWORK 67

DIVISION 8: PORTLAND CEMENT CONCRETE 73

DIVISION 9: REINFORCING STEEL 82

DIVISION 10: RESTORATION OF SURFACE IMPROVEMENTS 85

DIVISION 11: ROADWAY CONSTRUCTION 91

DIVISION 12: CONCRETE SIDEWALK, CURB AND GUTTER 102

DIVISION 13: STORM DRAINS 109

DIVISION 14: SANITARY SEWER / LAND DRAIN 112

DIVISION 15: CASINGS/BORINGS 117

DIVISION 16: POWER, GAS, TELEPHONE AND T.V. CABLE 119

DIVISION 17: SURVEY 120

DIVISION 18: STREET AND TRAIL 123

DIVISION 19: ROADWAY LIGHTING 125

DIVISION 20: UNDERGROUND IRRIGATION SYSTEMS 128

DIVISION 21: PLANTING 142

DIVISION 22: CHAIN LINK FENCING 152

STANDARD DRAWINGS/DEVELOPMENT STANDARDS

DIVISION 1: GENERAL REQUIREMENTS

Section 1.01 PURPOSE OF DOCUMENTS:

The purpose of these Engineering Standards and Construction Specifications is to govern any work done or improvements installed within Public right-of-ways or across easements within the boundaries of Syracuse City. Construction work on infrastructure that is city-owned or shall become owned by Syracuse City shall comply with these standards and specifications, Syracuse City ordinances, master plans, planning, and zoning. Developers/ Contractors shall thoroughly read and understand these specifications and standards before constructing public improvements.

The improvements shall include all street improvements in front of all lots and along all dedicated streets to a connection with existing improvements of the same kind or the boundary of the development nearest the existing improvements. Layout must provide for future extension to adjacent development and be compatible with the contour of the ground for proper drainage. At a minimum, all water lines, subsurface drain lines and any other buried conduit shall be installed to the boundary lines of the development.

The Developer/Contractor shall contact Public Works/Engineering for all matters dealing with construction work within a City right-of-way or with any work connecting onto a City utility. SPECIAL PERMITS AND BONDING ARE REQUIRED FOR ALL SUCH WORK.

Section 1.02 CONSTRUCTION DRAWINGS

Complete and detailed construction plans and drawings shall be submitted to the City for review prior to receiving approval for the development from the City and starting construction. No construction shall be started until plans have been checked and approved by all responsible parties/agencies and written approval has been received from all applicable outside agencies.

Section 1.03 STANDARDS FOR CONSTRUCTION DRAWINGS

The following guidelines are for the purpose of standardizing the preparation of drawings to obtain uniformity in appearance, clarity, size and style.

These plans and designs shall meet the standards defined in the specifications and drawings hereinafter outlined. The minimum information required on drawings is as follows:

A. All drawings shall be clear and legible and conform to good engineering and drafting practices. Size of drawings shall be either 11” x 17” or 24” x 36”. The sheets shall have a minimum of ½” border on top, bottom and right sides. The left side shall have a minimum border of 1½”.

B. In general the following shall be included on all drawings:
   1. North arrow (plan)
   2. Scale (standard engineering scale) not to exceed 100 feet to the inch
   3. Elevations referenced to Davis County Benchmark location
   4. Stations and elevations for profiles
   5. Title block to include:
   6. Name of City
   7. Project title (name of subdivision etc.)
   8. Type and location of work specified

C. Overall site development drawing is required showing layout of entire project and its location in relation to other neighboring properties.

D. Curb and gutter, drains and drainage structures, sidewalks and street surfacing drawings shall show:
   1. Scale (using an appropriate engineering scale)
   2. Vertical scale defined and appropriate for slope and detail required
   3. Profile views of centerline and top back of curb on both sides of the street
   4. Stationing, top back of curb elevations and curve data at back of curb
   5. Flow direction and type of cross drainage structures at intersections with flow line elevations and grades defined
   6. Bench Mark (B.M.) location and elevation (using Davis County datum)
   7. Typical cross-section for all street sizes and classifications

E. Subsurface drain such as land drain and storm drain designs as well as sanitary sewer shall conform to the requirement herein and shall include the following:
   1. Scale (using an appropriate engineering scale)
   2. Vertical scale defined and appropriate for slope and detail required
   3. Location (horizontal and vertical) and slope of main lines
   4. Manhole size, location and elevation
   5. Type and size of main line pipe and laterals
   6. Bench Mark (B.M.) location and elevation (using Davis County datum)
   7. An overall development plan view of the subsurface drains at a scale that shows the entire development with proper detail

F. Culinary and secondary water drawings shall show:
   1. Scale (using an appropriate engineering scale)
   2. Location of main lines (vertical location may need to be shown if there is a potential for high points in the line or interference with other utilities)
   3. Type and size of main line pipe and laterals
   4. Location, size and type of valves, fittings, and hydrants
   5. Location, size and type of specialty equipment (Pressure Reducing Valves, air release/vacuum valves, flush hydrants, drains, pumps, etc.), as necessary
   6. An overall development plan view of the culinary and secondary water at a scale that shows the entire development with proper detail

G. Grading and Drainage shall include:
   1. Scale (using an appropriate engineering scale)
   2. Overall project limits showing property and lot lines
   3. Street names
   4. Existing contours with associated elevations labeled at one-foot intervals
   5. Final contours at completion of construction with associated elevations labeled at one-foot intervals
   6. Bench Mark (B.M.) location and elevation (using Davis County datum)
   7. Detention basin and associated structures with supporting calculations for volume and orifice
   8. Location of percolation test pits, wells, or groundwater monitoring sites
   9. Watercourses in open channels and open bodies
   10. Wetland areas and sensitive overlay zones
   11. Label constructed surface slopes with direction of flow and slope percent ensuring positive drainage into collection facilities with no surface drainage crossing through private property
   12. All grading and drainage designs must support geotechnical study recommendations or city standards whichever is greater.

H. Landscape plans shall be required for all site plans and for developments with open space shared by public or private affiliations. Landscape plans shall be stamped by a Landscape Architect currently licensed to practice in the State of Utah. The landscape plan shall include:
   1. Scale (using an appropriate engineering scale)
   2. Connection to irrigation main with valve box and pipe size
   3. Irrigation piping layout with valves, heads, pipe sizes, filters
   4. All surface treatments, such as topsoil, fabric, mulch, grass, rock, etc
   5. Trees and plantings
   6. Fence material, style, height, and location
   7. Edging such as concrete mow strip, polyethylene, brick, rock, etc
   8. Open watercourses
   9. Parking areas
   10. Walkways such as paths, trails, and sidewalks
   11. Lighting
   12. Amenities such as athletic field structures, playground, picnic, restrooms, and maintenance

I. Details for all structures to be constructed may need to be on a separate sheet. The detail sheet shall conform in every way to the Standards and Specifications of Syracuse City and shall be drawn to scale, complete with dimensions, labels, and notes.

A minimum of three full size copies of the construction plans and one electronic pdf shall be submitted to the city for each review/approval. The final approved construction set must be submitted to the city (three full size and one electronic pdf) prior to construction commencement. The City will retain two approved copies and one approved set will be returned to the developer. This approved set shall be kept available at the construction site. Prior to acceptance of the improvements the developer shall submit to the City a record set of drawings for review and approval. One full size reproducible set of record drawings and an electronic pdf version of the construction drawings must be submitted to the City. Such record set shall contain record information that reflects any corrections, measurements, notes, changes, and updates made to the plans during construction.

Section 1.04 PERMITS, FEES AND BONDING REQUIRED:

It shall be unlawful to do any construction, excavation work on any street, curb, gutter, sidewalk, sewer line, water line, pressure irrigation line, storm drain, land drain, or other infra-structure addition or improvement in Syracuse City without a Public Works' permit from the City to do so. Syracuse City and all utility companies are bound by these standard specifications. No work shall be started until a permit is secured. In order to obtain a Public Work's Permit, the Developer's/Contractor's authorized signature is required. If a contract to do such work for the City has been finalized, the contract fulfills the permit requirement.

Sub-section A. All Public Works' permit applications shall include:

- Start and completion dates of the project.
- The exact address or location of the work to be done.
- The type of work to be done.
- A detailed drawing of the work to be performed.
- A request for all utility companies to be contacted through Blue Stakes 1-800-662-4111 or 811.
- A traffic control plan
- Insurance
- A copy of the contractor's license
- Bond

Sub-section B. Before a permit is issued by the City, an application to the City must be filed and a permit fee and an inspection fee shall be paid to the City. These fees will be set by Council resolution. Fees shall be assessed on the following items:

- Inspection Costs
- Re-inspection (When an inspection has been requested, the inspection is performed and the work is not complete, a re-inspection fee shall be assessed.)
- Sewer and Water Lateral Installation Inspection (Applies to those not covered by Building Permit)
- Pressure irrigation service connection.
- Bond or improvement acceptance
- The decreased life expectance of the roadway based upon roadway damage.

All public improvement projects done for Public Works shall be bonded. Each contractor doing work in the City is required to maintain a $5000.00 bond with the City which shall remain in effect two years following the completion of all work on the project. Bond requirements are to guarantee the following:

(1) Construction work is completed.
(2) Final inspection is conducted.
(3) Repairs and/or replacement of required public improvements are finished and accepted.

Cash bonds for a one-time permit will be calculated based on the estimated cost of street repairs plus 10% or $5,000.00, whichever is greater.

The bonds shall be in the form of a bond from a surety company or a cash bond paid directly to the City. The City shall approve all bonds submitted. No bond shall be released until all improvements are completed and accepted by the City.

Section 1.05 CONTRACTOR AND CONSTRUCTION PLAN APPROVAL:

Before a Contractor performs any work within the City, the City shall approve the Contractor. Approval is granted for a period of one (1) year upon submission of one of the following:

- A current Utah State Contractor's License or Franchise Agreement. (Work will be restricted to that authorized by the license.)
- Proof of comprehensive general liability insurance. Bodily injury insurance will be in an amount of not less than three hundred thousand dollars ($300,000.00) for any one occurrence. Property damage insurance will be in an amount of not less than two hundred thousand dollars ($200,000.00) for any one occurrence and shall include underground exposure. Combined liability insurance will be in an amount of not less than five hundred thousand dollars ($500,000.00) for any one occurrence.
- A performance bond, which will be 20% of the costs of construction, will be owed to the City, that will be in effect for a period of one (1) year or one (1) year after the completion of work performed by the contractor, whichever is greater.

The Community Development Department shall approve construction plans and cut sheets before any work begins. Developers/Contractors proceeding with work without such approvals shall have the project shut down until such approvals are obtained. Repeated offenses may result in the Contractor losing its pre-qualification to perform work in the City.

Section 1.06 PRE-CONSTRUCTION CONFERENCE:

A pre-construction meeting with the Developer and the Contractor(s) involved in the subdivision construction shall be held with the Public Works Director/Engineer prior to commencement of any work. The location of the meeting shall be either on the project site or at the Syracuse City Public Works Building: 3061 South 2400 West, Syracuse, Utah 84075. The following items shall be furnished at the meeting:

A. A detailed outline showing the sequences of construction of principle items of work. The outline shall show the beginning and ending dates of the major items of work on the Project.

B. A list of names, titles, addresses, and telephone numbers of the Developer/Contractor's responsible personnel, indicating those who may be reached outside normal working hours.

C. A list of Sub-Contractors and Materials Suppliers to be involved with the project and the items of work they are going to perform or furnish materials for. The City will notify the Developer/Contractor of any concerns or pre-qualification deficiencies of the companies they plan to use.

Other items may be discussed at this pre-construction conference as determined by the Public Works Director/ Engineer. Official minutes of this meeting as prepared by the Public Works Director/Engineer shall become part of the project file for the project.

Section 1.07 TIMELY COMPLIANCE WITH THE ISSUED PERMIT:

The Developer/Contractor shall perform in accordance with the terms of the permit and the Standard Specifications and Standard Drawings in effect at the date of the permit. The work shall be done in a timely manner. Time limits may be a condition of the permit and may be shortened because of safety concerns. Permits may be suspended if compliance is not met.

Sub-section A. Inspections:

All work covered by a Public Works' permit shall be inspected by the Public Works Director prior to the following:

(1) Backfilling and compacting.
(2) Placing concrete and asphalt
(3) Placing any underground piping
(4) Making any connection into a city utility line
(5) Other work done in a public right of way.

Public Works shall also be notified prior to starting any Public Works project.

Sub-section B. <u>Notification of Needed Inspections:</u>

The Contractor shall request inspections forty-eight (48) hours in advance. Inspections are done on regular working days during the regular work hours of the City.

A charge shall be assessed for inspection callbacks.

Sub-section C. Responsibility of the Developer:

The developer is responsible for the complete development, including construction of the entire subdivision and any necessary off-site improvements, until it is finalized and accepted by the City.

Sub-section D. Definition of "Public Works Director/Engineer":

The term "Public Works Director/Engineer" as used in these specifications refers to the Public Works Director, Public Works Inspector, City Engineer, Public Works staff and others as designated by the Public Works Director.

Sub-section E. Conflict:

These Standard Specifications and Standard Drawings are the minimum requirements of Syracuse City. In the event that any provisions herein conflict with general industrial standards, or with other requirements specified by the City, the more stringent of the standards will apply.

Section 1.08 ELECTRONIC AND RECORD DRAWINGS:

At the completion of the project, plat and improvement drawings shall be furnished electronically in Portable Document File (PDF) format and in a computer-aided drafting file format such as MicroStation (.dgn), AutoCAD (.dwg) or Data Exchange Format (.dxf).

After completion of all public works improvements the Developer shall provide the City (Community Development Department) with a set of reproducible (mylar) "record drawings" which have been corrected and certified by the design engineer and a licensed Utah Land Surveyor to show the constructed improvements. Final payment from the bond shall not be made until these records are received and record drawing accuracy is verified.

Section 1.09 TEMPORARY SERVICES:

Any temporary services and utilities such as telephone, electrical, water toilet facilities, etc., shall be the responsibility of the Developer/Contractor.

Section 1.10 CODES AND STANDARDS:

Where codes and standards are referred to they shall be current, approved copies. It shall be the duty of the supplier of any material on this work to submit evidence, if requested, that its material is in compliance with the applicable codes and standards.

Section 1.11 STATE AND LOCAL LAWS:

The Developer/Contractor shall conform to all applicable state and local laws in carrying out its obligations under the Contract.

This shall include, but is not limited to, compliance by the Developer/Contractor with the requirements of Chapter 30, of Title 34, of the Utah Code Annotated, 1953 as Amended. If the provisions of Section 34-30-1, of the Utah Code Annotated, 1953 as amended, are not complied with, this Contract shall be void.

Section 1.12 COMPLIANCE WITH GOVERNMENTAL REGULATIONS:

The Developer/Contractor's personnel, equipment, and operations shall comply fully with all applicable standards, regulations, and requirements of existing Federal, Utah State, and Local governmental agencies. This shall include, but not necessarily be limited to, the following:

Sub-section A. United States Occupational Safety and Health Administration Regulations:

Title 29 of the Code of Federal Regulations, Part 1926 (29 CFR Part 1926), Safety and Health Regulations for Construction.

Sub-section B. Utah State Industrial Commission Regulations:

The Utah Occupational Safety and Health Act (1973) and Employer-Employee Safe Practices for Excavations and Trenching Operations (Jan. 1, 1974), as published by the Utah State Industrial Commission, including any and all amendments or revisions effective prior to performance of the work.

Sub-section C. City Ordinances:

The Developer/Contractor shall be required to comply with all Syracuse City Ordinances.

Sub-section D. UDOT Requirements:

When crossing or working within Utah Department of Transportation rights-of-way the Developer/Contractor shall be responsible to obtain all necessary permits and comply with all appropriate UDOT regulations including applicable sections in "State of Utah Standard Specifications for Road and Bridge Construction," latest edition.

Work to be performed within UDOT rights-of-way shall be done in accordance with "SPECIFICATIONS FOR EXCAVATION ON STATE HIGHWAY RIGHT-OF-WAY", latest revision. The Developer/ Contractor shall be responsible to obtain all necessary permits and meet any bond requirements imposed by that agency.

The Developer/Contractor will pay UDOT fees for any UDOT inspectors.

Sub-section E. Permits:

The Developer/Contractor is responsible to obtain all required business licenses and building permits applicable to this project. Developer/Contractor shall be subject to the conditions of all development approvals, excavation permits and agreements between the Owner and the permitting agencies. Permits shall include the State of Utah General Construction Storm Water Permit as required.

Section 1.13 FEDERAL, STATE, AND LOCAL INSPECTING AGENCIES:

The site of construction is to be open at all reasonable times and places for periodic observation by accredited representatives of the Federal, State, and local agencies who have regulatory or supervisory authority over any part of the work proposed or regulated thereto.

Section 1.14 PUBLIC SAFETY AND CONVENIENCE:

The convenience of the general public and the protection of persons and property are of prime importance and shall be provided for by the Developer/Contractor during this project. The Developer/Contractor shall use every reasonable precaution to safeguard persons and property. Failure of the Owner or the Public Works Director/ Engineer to notify the Developer/Contractor of any deficiencies in providing for public safety and convenience shall not relieve the Developer/Contractor from its responsibility. The Developer/Contractor shall be required to comply with the requirements of the latest edition of the **Manual on Uniform Traffic Control Devices (MUTCD)**.

Sub-section A. Compliance with Rules and Regulations:

The Developer/Contractor shall comply with all rules and regulations of the City, County, and State authorities regarding the closing of public streets, or highways, to the use of public traffic. If conditions justify, the Public Works Director/Engineer may authorize the Developer/Contractor to close general traffic to not more than one (1) city block at any given time. No such closure shall be made without authorization of the Public Works Director/Engineer. Closure of streets or highways shall be in conformance with the **(MUTCD)**.

Sub-section B. Road Closures and Obstructions:

No road shall be closed by the Developer/Contractor to the public except by express permission of the Public Works Director/Engineer. The Developer/Contractor shall, at all times, conduct its work so as to ensure the least possible obstruction to traffic and normal commercial pursuits. Road closed for construction activities during normal daytime working hours shall be open for public traffic once daytime construction activities have ceased. Such road openings shall provide for the safe conveyance of public traffic through such construction zones.

Sub-section C. Protection of the Traveling Public:

All obstructions within traveled roadways shall be protected by signs, barricades, and lights where necessary for the safety of the traveling public. All barricades and obstructions shall be protected at night by signal lights which shall be suitably distributed across the roadway and kept burning from sunset to sunrise. Barricades shall be of substantial construction. Failure of the Owner or the Public Works Director/Engineer to notify the Developer/Contractor to maintain barricades, barriers, lights, flares, danger signals, or guards shall not relieve the Developer/Contractor from its responsibility.

Sub-section D. Hazardous Conditions:

Whenever the Developer/Contractor's operations create a hazardous condition, it shall furnish flaggers and guards to give adequate warning to the public of any dangerous conditions to be encountered. It shall furnish, erect, and maintain fences, barricades, signs, lights, and other devices that may be necessary to prevent injury and damage to persons and property. Flaggers and guards shall be UDOT trained and shall hold current certification and shall be equipped with signs, flags, etc. as required by the Utah State Department of Transportation (UDOT) regulations.

Sub-section E. Dust and Debris Control:

The Developer/Contractor shall control dust and debris that originates in the construction right-of-way or site. Dust, trash, and other debris shall be controlled on a daily basis by methods that shall include, but not be limited to, the use of a dust setting spray, a "pick-up broom or street sweeper and trash disposal. When conditions warrant and at the sole determination of the City, the Developer/Contractor shall maintain on the project site a water truck. The Developer/Contractor shall be responsible to secure a source of water and shall obtain the necessary permission for its use. Failure by the Developer/Contractor to adequately control dust and debris may result in the City initiating dust and debris control measures and deducting the cost from payment due to the Developer/Contractor. The Developer/Contractor shall be responsible for all trash and or debris removed from site, not buried, or disposed of improperly – as determined by the Public Works Director/Engineer.

Section 1.15 CONFINEMENT OF WORK AND ACCESS TO RIGHT-OF-WAY AND EASEMENTS:

The Developer/Contractor will be required to confine construction operations within the dedicated right-of-way for public thoroughfares or within areas for which construction easements have been obtained unless it has made special arrangements with the affected property owners in advance. The Developer/Contractor will be required to protect stored materials, lawn, trees, and other features located adjacent to the proposed construction site. During construction operations, the Developer/Contractor shall construct and maintain such facilities as may be required to provide access by all property owners to their property. No person shall be cut off from access to their residences or places of business for a period exceeding eight (8) hours, unless the Developer/Contractor has made special arrangements with the affected persons prior to commencing work in the area.

Section 1.16 NOTIFICATION OF RESIDENTS:

All property owners and residents adjacent to the streets or easements affected by the construction shall be notified by the Developer/Contractor at least forty-eight (48) hours in advance of time construction begins. The Developer/Contractor can satisfy this requirement by placing a written notice on the door of each residence or

business having sufficient information. The message and format of the notice shall be approved by the City at the Pre-construction Conference.

Section 1.17 WEATHER CONDITIONS:

In the event of temporary suspension of work, or during inclement weather, the Developer/Contractor will, and will cause its Sub Developer/Contractors to, protect any project work or materials against damage from the weather. If, in the opinion of the Public Works Director/Engineer, any Project work or materials become damaged by reason of failure on the part of the Developer/Contractor or any of its Sub Developer/Contractors to so protect its work, such work or materials shall be removed and replaced at the expense of the Developer/Contractor.

Section 1.18 LAND MONUMENTS:

The Developer/Contractor shall preserve existing City, County, State, and Federal land monuments whenever possible. When these monuments cannot be preserved, the Developer/Contractor shall notify the Public Works Director/Engineer at least two (2) weeks in advance of the proposed construction in order that the Public Works Director/Engineer will have ample opportunity to reference these monuments for later replacement.

Section 1.19 SOURCE OF MATERIALS:

All materials furnished or incorporated in this project shall conform to the requirements of these Specifications.

The Developer/Contractor shall acquire the necessary rights, at its own expense, to take material from aggregate sources and to use properties for plant site, hauling roads, and other purposes.

The Developer/Contractor may select areas for disposal of surplus materials; however, the Developer/Contractor will be responsible for acquiring the necessary right, at its own expense, to use the property for such purpose. Such surplus materials disposed may be subject to state storm water permitting requirements.

Section 1.20 OPERATION AND MAINTENANCE MANUALS:

The Developer/Contractor shall furnish the Public Works Director/Engineer with two (2) sets of all operation and maintenance manuals, drawings, diagrams, etc., for all pumps, motors, control panels, valves, meters, etc., for use in the Operation and Maintenance Manual.

Section 1.21 INTERFERING STRUCTURES, UTILITIES AND FACILITIES:

The Developer/Contractor shall exercise all possible caution to prevent damage to existing structures and utilities, whether above ground or underground. While these structures and utilities may be shown on the improvements plans, the information has been compiled from the best available sources, its completeness and accuracy cannot be guaranteed, and it is presented simply as a guide to possible difficulties. The Developer/Contractor shall notify all utility offices concerned at least forty-eight (48) hours in advance of construction operations in which a utility agency's facility may be involved. Notification to blue stakes does not necessarily cover all buried lines. This shall include, but not be limited to, irrigation, water, telephone, electric, sewer, storm drain, gas, and cable television. The Developer/Contractor shall be responsible for any and all changes to, relocation of, or re-connection to public utility facilities encountered or interrupted, which could have been reasonably foreseen, during the prosecution of the work. All costs relating thereto shall be at the Developer/Contractor's expense.

It shall be the responsibility of the Developer/Contractor to expose all existing underground structures and utilities in such a manner as to prevent damage to the same. Any structure or utilities damaged by the Work shall be repaired or replaced at the Developer/Contractor's expense. Any such repairs or replacements made shall be approved by owner of structure and inspected and accepted by Owner.

If the Developer/Contractor encounters existing structures that will prevent construction, it shall notify the Public Works Director/Engineer before continuing with the construction in order that the Developer’s Engineer or Public Works Director/Engineer may make such field revisions as necessary to avoid conflict with the existing structures.

Section 1.22 MATERIAL AND COMPACTION TESTING:

It shall be the responsibility of the Developer/ Contractor to test all materials used during construction to ensure they meet city specifications. During the course of the work, a Geotechnical Engineer/Testing Company shall perform such tests as are required to identify materials, to determine gradation, to determine compaction characteristics, to determine moisture, to determine density of fills in place, to determine concrete strength, to determine density and mixture of asphalt. The city reserves the right to randomly test to verify that the construction conforms to the requirements of the specifications. Such tests are not intended to provide the Developer/Contractor with the information required by it for the proper execution of the work and their performance shall not relieve the Developer/Contractor of the necessity of completing the construction in accordance with these specifications and Standard Drawings.

The estimated cost of such testing will be included in the Developer's bond posted with the City. The Developer shall contract with a geotechnical or certified testing company to perform the necessary tests. Such tests shall be accomplished under observation by the City. The City reserves the right to perform additional spot check tests as deemed necessary by the Engineer.

Section 1.23 UNDERGROUND PIPE INSPECTIONS

Prior to the City accepting newly constructed storm sewers or land drains the Contractor/Developer must provide the City with a recording of the televising of the sanitary sewer, storm sewer, and land drain (performed in the presence of the Public Works Director). The Contractor/Developer shall pay the cost of the televising the sewer. All conduits must be cleaned and flushed prior to televising. The televising equipment must record a continuous distance from the point of beginning.

Work conducted on the sanitary sewer, storm sewer, and land drain lines which shall be owned and/or operated by the City or others shall meet their requirements regarding materials, inspection and subsequent acceptance.

DIVISION 2: TRENCH EXCAVATION AND BACKFILL

Section 2.01 GENERAL:

This section covers the requirements for trenching and backfilling for underground pipelines. Unless otherwise shown or ordered, pipe shall be laid in an open trench. All incidental clearing, preliminary grading, structure removal, and benching shall be considered a part of the trenching operation.

Excavation of trenches for pipe lines shall include the excavation of all materials, of whatever nature, except pavement, coming within the designated lines of the trenches, as hereinafter described. It shall include the excavation of all materials required for the construction of manholes, flush tanks, cleanout boxes, meters, pressure regulators and other appurtenances as shown on the drawings or directed by the engineer. It shall include all excavation required for the removal or lowering of existing pipe lines or appurtenances and shall include all necessary clearing and grubbing, all necessary draining, pumping, timbering, sheeting and subsequent removal of these materials as directed by the inspector. It shall include the disposal of all material excavated and the backfilling of the trenches and appurtenant structures as hereinafter provided. No tunneling will be permitted unless permission is given in writing by the Inspector.

Section 2.02 BARRICADES:

Barriers shall be placed at each end of all excavations, and at such places as may be necessary along excavations, to warn all pedestrians and vehicular traffic of such excavations. Lights shall also be placed along excavations from one hour before sunset each day to one hour after sunrise of the next day; including weekend and holidays, until such excavations are entirely refilled, compacted, and surfaced or final graded. All excavations shall be barricaded in such a manner as to prevent persons from walking into, falling into, or otherwise entering those excavations.

Section 2.03 BLASTING:

Blasting will not be allowed except by permission from the Public Works Director/Engineer. The Developer/ Contractor shall comply with all laws, regulations, ordinances, and safety codes relative to the handling, storage, and use of explosives. The Developer/Contractor shall be fully responsible for all damage to life and property attributable to its blasting operations. Excessive blasting or overshooting will not be permitted. The Developer/ Contractor shall remove any material outside the authorized cross section, which may be shattered or loosened by blasting.

Section 2.04 SHEETING, BRACING AND SHORING OF EXCAVATIONS:

Excavations shall be sheeted, braced, and shored as required to support the walls of the excavations. These measures shall be taken to protect the workers, the work in progress, existing utilities, structures, and improvements, from damage due to sliding and settling of trench walls. All such sheeting, bracing, and shoring shall comply with the regulations of the Utah State Industrial Commission, the United States Occupational Safety and Health Administration (OSHA), and accident prevention and safety provisions of the Contract.

The Developer/Contractor shall be fully responsible for the adequacy of methods and materials used in trench sheeting, bracing, shoring, and other systems provided to protect workers. Injury to or death of workers resulting from inadequate trench safety measures shall be the full and complete responsibility of the Developer/Contractor. All damages resulting from lack of adequate sheeting, bracing and shoring shall be the responsibility of the Developer/Contractor, and the Developer/Contractor shall affect all necessary repairs or reconstruction at its own expense resulting from such damage.

Sheeting or shoring that does not extend below the centerline of the pipe may be removed at the discretion and responsibility of the Developer/Contractor after the pipe embedment has been placed and compacted to a level twelve inches (12") above the top of the pipe. Following removal of the sheeting or bracing, the trench shall be immediately backfilled and compacted or consolidated.

Section 2.05 CONTROL OF GROUNDWATER:

All trenches shall be kept free from water during excavation, fine grading, pipe laying and jointing, and pipe embedment operations. Where the trench bottom is mucky or otherwise unstable because of the presence of groundwater, and in all cases where the static groundwater is above the bottom of any trench or bell hole excavation, such groundwater shall be lowered to the extent necessary to keep the trench free from water and the trench bottom stable when the work within the trench is in progress. The discharge from excavation dewatering shall be conducted to natural drainage channels, gutters, drains, or storm sewers. Measures should be taken to not discharge silts and fines or any other pollutant into the storm drain system. No sanitary sewer shall be used for disposal of trench water. Surface water shall be prevented from entering trenches.

Section 2.06 TRENCH EXCAVATION:

Excavation for pipelines shall be located as shown on the Drawings or as staked in the field. Trenches shall be excavated to the depths and widths required to accommodate the construction of the pipelines, as follows:

Sub-section A. Utility Protection:

All water, gas, sewer or other pipes encountered in excavating for the trench or appurtenances shall be supported and protected from injury in a manner satisfactory to the inspector.

Sub-section B. Normal Excavation:

Except in ledge-rock, cobbles, stones, or water-saturated earth, mechanical excavation of trenches shall not extend below the bottom of the pipe after placement in its final position. All additional excavation necessary for preparation of the trench bottom shall be made manually.

Sub-section C. Authorized Over-Excavation:

Where ledge-rock, cobble rock, stones or other material render the trench material unsuitable for pipe bedding, as determined by the Public Works Director/Engineer, bedding material shall be imported and placed. The trench shall be excavated to a minimum of four-inches (4”) below the bottom of the pipe after placement in its final position.

Where unstable material is encountered in the excavation, foundation material may be required, as determined by the Public Works Director/Engineer. In such cases, a minimum of eight inches (8") below the bottom of the pipe after placement in its final position shall be removed. Over-excavation not ordered, specified, or shown shall be considered to be unauthorized excavation.

Excavation in Rock and Hard Pan. If the bottom of the trench for any pipeline is in rock or in material too hard to permit the bed to be properly formed for the pipes, the excavation shall be made not less than 4 inches below the established subgrade, and the bottom of the trench shall be brought to subgrade with approved material compacted into place as ordered by the Inspector. The subgrade for all pipeline trenches is hereby defined to be the bottom of the trench at the elevation of the outside bottom of the pipe.

Excavation Other than Rock. Where the bottom of the trench is composed of material other than rock, care shall be exercised to prevent any disturbance of the material beyond the prescribed lines, and if any material is so disturbed, it shall be tamped back into place in a manner satisfactory to the Inspector.

Undesirable Material. If any undesirable material is encountered in the bottom of the trench, the contractor shall make such additional excavation as the inspector may direct, and shall replace it with gravel of a quality that will pack, and said gravel shall be tamped into place in 4-inch layers to the satisfaction of the Inspector.

Sub-section D. Unauthorized Over-Excavation:

Any excavation carried below the elevation required to install the pipe as specified in these Specifications, or directed by the Public Works Director/Engineer, shall be considered to be unauthorized. Such excavation shall be backfilled in accordance with these Specifications, all at the Developer/Contractor's expense.

Sub-section E. Trench Width:

The trench shall be excavated such that the pipe is always centered in the trench. The minimum clear trench width at the horizontal diameter of the pipe must not be less than the outside diameter of the pipe plus twelve inches (12").

Trench width for pipeline structures, valves, or other accessories shall be sufficient to leave at least twelve inches (12") clear between their outer surfaces and the trench. Backfill with earth under structures or valves will not be permitted. Any unauthorized excess excavation below the elevation indicated for foundation of any structures shall be backfilled in accordance with this Specification regarding Trench Backfill, at the Developer/Contractor's expense.

The sides of the trench shall be vertical and the depth of the trench shall be measured from the existing ground surface to the subgrade of the trench, provided that on paved streets the depth shall be measured from the bottom of the pavement to the subgrade of the trench. Additional excavation required for manholes, vaults, cleanout boxes, meter boxes, valve boxes, pressure regulators and other appurtenances shall be made as described in these Specifications; provided, however, that the measurement of additional excavation shall include only such additional material as is required beyond the designated lines of the trench.

Sub-section F. Fine Grading the Trench Bottom:

The bottom of the trench shall be accurately graded and prepared to provide uniform bearing and support on undisturbed soil or compacted granular bedding at every point along the entire length of the pipe. Bell holes shall be hand excavated after the trench bottom has been fine graded. Bell holes shall be only large enough to permit making the joints and to assure that any portion of the joint or bell does not support the pipe.

Sub-section G. Trenches in Embankments:

Before laying pipes that are to be in fill or embankment areas, the embankment shall first be placed and compacted to the specified density to a depth of not less than two feet (2') above the top of the proposed pipe. After placing and compacting the embankment, the trench for the pipe or conduit shall be excavated through the fill and fine graded and the pipe installed as specified.

Sub-section H. Placement of Excavated Material:

All excess material shall be hauled away from the construction site and disposed of in an area obtained by the Developer/Contractor and approved by the Public Works Director/Engineer. The Developer/Contractor shall be responsible for all rights-of-way, easements, and access associated with the disposal of excess excavated material. It shall further be responsible to obtain permission from the property owner or person controlling the property where the Developer/Contractor plans to dispose of excavated material. No compensation will be made to the Developer/Contractor for disposal of excess excavated material.

Non-excess excavated material shall be piled in a manner that will not endanger the work and will avoid obstructing sidewalks and driveways. Gutters and irrigation ditches shall be kept clear or other satisfactory provisions shall be made for street drainage and continuity of irrigation.

Grading of the area surrounding the trenches, including excavated materials, shall be performed as necessary to prevent surface water from flowing into trenches, or other excavations. Control of groundwater shall be as specified in these Specifications regarding Control of Groundwater.

Section 2.07 TRENCH BACKFILL

Trench backfill for piping consists of four zones: foundation, bedding, initial backfill, and final backfill. "Pipe embedment" is a commonly used term that refers to the region including the bedding and initial backfill zones, or any region within one foot (1') of any pipe, pipeline structure, or accessory. The foundation is defined as the region between eight inches (8") and four inches (4") below the bottom of the pipe. The bedding is defined as the region between four inches (4") below the bottom of the pipe and the bottom of the pipe. The initial backfill is defined as the region between the bottom of the pipe and twelve inches (12") above the top of the pipe. The final backfill is defined as the region further than twelve inches (12") above the pipe.

The Public Works Director/Engineer shall determine the suitability of excavated materials for use as foundation, bedding, initial backfill, and final backfill. When the native excavated materials are not satisfactory for foundation, bedding, or backfill, the Developer/Contractor shall provide imported granular material. All fill materials shall be compacted as specified in this section.

All backfill operations shall be completed within ten (10) calendar days from the starting of excavation. Unless otherwise approved by the Engineer.

All backfill material shall be free from cinders, ashes, refuse, organic and frozen material, boulders, stones, or other material that, in the opinion of the City Engineer, is unsuitable.

Backfill material under, around, and to one foot over the pipe shall consist of select earth, sand or fine gravel, free from clods, lumps or stones larger than 1 1/2-inches to their maximum dimensions. This shall be limited to 3/4" maximum around PVC, ABS or polyethylene lines. In wet or unstable conditions, material in this zone shall be free draining, non-plastic material.

Backfill under and around the pipe to the centerline shall be placed in maximum layers of 6-inches. Bell holes of ample dimensions shall be dug in the bottom of the trench for each pipe. Uniform bearing for each pipe barrel shall be provided for the full length of each pipe. Backfill from the centerline to one-foot above the pipe shall be placed and compacted in maximum layers of 6-inches. Backfilling under improved areas (such as paved streets) shall be placed and compacted in 6-inch layers. All layers through improved areas will be compacted to not less than ninety-six (96%) of the maximum Standard Proctor Density (T-99). Only in the zone from one-foot above the pipe to finished subgrade under unimproved areas will the use of wheel compaction be allowed. Adequate testing by the contractor shall be required to satisfy compaction requirements.

Impervious backfill shall be required at irrigation canal crossings or other waterway interferences.

Sub-section A. <u>Imported Granular Material:</u>

Imported granular material for foundation, bedding, and backfill shall be cleaned crushed rock or gravel, free from sod, vegetation, and other organic or deleterious material. Slag will not be allowed in the pipe embedment. Imported granular material shall conform to the following gradation specifications:

1. **Foundation Material.** One hundred percent (100%) less than two-inch (2") and maximum of five percent (5%) less than one-half-inch (1/2").

2. **Embedment & Initial Backfill Material.** Ductile-iron pipe - One hundred percent (100%) less than one and a half inch (1-1/2") and maximum of five percent (5%) passing a No. 200 sieve.

PVC or polyethylene pipe - One hundred percent (100%) less than three-quarter inch (3/4") and maximum five percent (5%) passing a No. 200 sieve.

Concrete pipe - One hundred percent (100%) less than one and a half inch (1-1/2") and maximum of five percent (5%) passing a No. 200 sieve.

3. Final Backfill Material. One hundred percent (100%) less than four-inch (4"), maximum of fifty percent (50%) passing a No. 10 sieve, maximum of thirty percent (30%) passing a No. 40 sieve, and maximum of fifteen percent (15%) passing a No. 200 sieve.

Sub-section B. Foundation Placement:

When over-excavation is authorized by the Public Works Representative/Engineer, foundation material shall be placed in the foundation zone and below. The foundation material shall be placed so that the trench can be properly fine graded as specified. The foundation material shall be deposited over the entire trench width and compacted in layers. The layers shall have a maximum uncompacted thickness of six-inches (6"). The material shall then be fine graded in accordance with the specification for Fine grading herein.

Sub-section C. Pipe Embedment:

Native embedment material shall conform to the general requirements Specified herein for imported granular material, and may include excavated materials consisting of loose earth, sand, or gravel having no material larger than two-inches (2") in any dimension. For PVC pipe, the material must be no greater than three-quarter inch (3/4") in any dimension. If the excavated materials are not satisfactory, the specified imported granular material shall be used for pipe embedment.

1. Bedding. The bedding material shall be deposited over the entire trench width to a compacted thickness of no less than four inches (4"). The material shall have a maximum uncompacted thickness of six inches (6").

2. Initial Backfill. After the pipe is in place, initial backfill material shall be placed at any point below the mid-point of the pipe simultaneously and uniformly on both sides of the pipe in un-compacted layers not to exceed ten-inches (10") or one-half the diameter of the pipe, whichever is less. Initial backfill material shall be placed with care to prevent displacement of or damage to the pipe during the embedment process. Initial backfill material shall be scattered alongside the pipe and not dropped into the trench in compact masses. That section of the pipe zone from the mid-point of the pipe to twelve inches (12") above the top of the pipe shall then be filled with initial backfill materials and compacted.

Sub-section D. Final Backfill:

Final backfill shall be from twelve inches (12") above the top of the pipe to the level shown on the Drawings. Excavated materials consisting of fines, sand, and gravel shall be used for final backfill. No oil cake, bituminous pavement, concrete, rock, or other lumpy material shall be used in the final backfill unless these materials are scattered and do not exceed six inches (6") in any dimension. Perishable or spongy material shall not be used in final backfilling.

Sub-section E. Compaction:

Backfill shall be compacted by means of sheep-foot rollers, pneumatic tire rollers, vibrating rollers, or mechanical tampers. The Contractor shall be required to provide evidence of proper compaction in the form of test results from an outside agency.

Under pavements, shoulders or other surface improvements the in-place density shall be a minimum of ninety-six percent (96%) of laboratory standard the maximum dry density as determined by AASHTO T-99. In shoulders and other areas the in-place density shall be a minimum of ninety percent (90%) of the maximum dry density as determined by AASHTO T-99.

Fill material shall be placed at a moisture content and un-compacted lift thickness such that after compaction the required relative densities will be produced. In no event will the material be placed in lifts that, prior to compaction, exceed six inches (6") for foundation and embedment and twelve inches (12") for final backfill.

If the required relative density is not attained, test sections will be required to determine any adjustments in compaction equipment, thickness of layers, moisture content and compactive effort necessary to attain the specified minimum relative density.

Approval of equipment, thickness of layers, moisture content, and compactive effort shall not be deemed to relieve the Developer/Contractor of the responsibility for attaining the specified minimum relative densities. The Developer/Contractor, in planning its work, shall allow sufficient time to perform the work connected with test sections and to permit the Public Works Director/Engineer to make tests for relative densities.

Sub-section F. <u>Consolidation</u>

Consolidation of backfill shall be accomplished by those methods in which water is used as the essential agent to produce the desired condition of density and stability. Water shall be applied by jetting unless flooding is specifically authorized by the Public Works Representative/Engineer. Authorization by the Public Works Director/Engineer to use any consolidation method does not relieve the contractor of his responsibility to meet the specified density requirements. Water for consolidation shall be furnished at the contractor expense and be metered if filled by City owned water facility.

In the jetting procedure the jets shall be inserted at not more than four-foot intervals (staggered throughout the length of the back filled area) and shall be slowly forced down to the bottom of the trench or top of previously jetted lift and held until the trench back fill is completely saturated with water. Depth of jetted lift shall not exceed 5 feet unless otherwise approved by the Public Works Representative/Engineer.

The minimum size of hose equipment shall be as to provide a minimum pressure of 35 pounds per square inch at the discharge. The jet shall be a rigid iron pipe with a minimum diameter of one inch.

After the water-settled trench has set for several days, any depression in the trench shall be filled, mounded over, and wheel rolled to compact the material thus placed.

All precautions necessary shall be taken by the contractor to prevent damage and movement (including floating) of the pipeline, structures, and existing adjacent improvements and utilities. The use of consolidation methods will be allowed only when they not result in damage to adjacent ground. The contractor shall make his own determination in this regard, and shall assume all risks and liability for settlement or lateral movement of adjacent ground, improvements, or utilities, either on the surface of the ground or underground.

Section 2.08 TRENCH CROSSINGS STREETS AND DRIVEWAYS:

At road crossings or where existing driveways occur on a road, the Developer/Contractor shall make provisions for trench crossings either by means of backfill or temporary bridges.

Temporary Bridging. The contractor shall construct suitable bridging over the trench at all street intersections and at driveways to property abutting the line of the work, and at such other points as may be required. The bridging shall be of sufficient strength to carry the loads required. For public vehicle crossings it shall meet or exceed H-20 rating as defined in Department of Transportation standards.

Section 2.09 TRENCH IN EASEMENTS:

Any disturbance to property caused by the Developer/Contractor's activity within easements shall be restored to the satisfaction of the owner of the property. If necessary, shrubs, fences, or other objects shall be removed carefully. If work must occur on a lawn, the lawn shall be cut to a width of two feet (2') wider than the intended work area (one foot (1') on each side). The lawn sod shall be stacked separately from and shall not be mixed with other excavated material.

Where the pipeline or structure is located on, along or across sodded parking, lawns or grass plots, the contractor shall in advance of making the excavation, remove the lawn or sod and give it proper care and attention, and shall replace the same in as nearly the original location and condition as is reasonably possible after the excavation has been backfilled and settled. Where it is necessary to deposit the excavated material on lawns or parking during the process of construction, the contractor shall first spread canvas or similar material of suitable size upon the grass to prevent any of the excavated material from coming in contact with the sod. The excavated material shall be removed as soon as possible in order to avoid injury to the grass and the contractor shall replace, at his own expense, any sod that is damaged.

After the sod is removed, if excavation is necessary, the topsoil shall be removed to a depth of twelve inches (12"), or the actual depth of the topsoil, whichever is less. The topsoil shall be stored separately from and shall not be mixed with other excavated material.

Following completion of the backfilling and the compaction of the trench, the Developer/Contractor shall replace topsoil, lawn sod, shrubs, fences, and other items that may have been removed from within the easement area and shall clean up and remove any rocks, dirt or any other debris that remain from the construction work.

Where the trench is in an unpaved street, the backfilling shall be slightly rounded over the trench and left to settle for such time as the inspector may direct, at which time it shall be thoroughly rolled with a five (5) ton truck loaded to capacity. The entire area of the trench shall be covered at least three times by the tread of the tires, after which any depression or irregularities shall be smoothed up to the proper elevation and re-rolled. The surface over the trench shall be left in a uniformly smooth condition, conforming to the street surface and all excess material shall be removed. During the interval of waiting for settlement of the material in the trench, the Contractor shall keep the surface over the trench oiled and shall maintain said surface in good condition until finally completed and accepted.

Section 2.10 RESTORATION OF CONSTRUCTION SITE:

All areas disturbed by excavation and backfilling construction shall be restored to original condition, or better, at the Contractor's expense. During the progress of the Work, the Developer/Contractor shall clean up all construction debris, excess excavation, and excess materials, and shall restore all fences, irrigation structures, ditches, culverts, and similar items. The Developer/Contractor shall stockpile the excavated trench material so as to do the least damage to adjacent grassed areas, or fences, regardless of whether these are on private property or public rights-of-way. All excavated materials shall be removed from grassed and planted areas and these surfaces shall be left in a condition equivalent to their original surface and free from all rocks, gravel, boulders, or other foreign materials.

Section 2.11 DEVELOPER/CONTRACTOR'S RESPONSIBILITY:

The Developer/Contractor will be responsible to see that the backfilling and compaction are properly and adequately done. Settlement of trenches within a period of one (1) year after final acceptance of the project shall be considered incontrovertible evidence of inadequate compaction, and the Developer/Contractor shall be responsible for correcting the condition in accordance with the provisions of these Specifications. This includes the replacement of sidewalk, curb and gutter, and other surface improvements. All subsequent settling of backfill areas will become the sole responsibility of the contractor for a period of not less than one year following the final approval of the entire project.

DIVISION 3: CULINARY WATER

Section 3.01 GENERAL:

This Division covers furnishing and installing pressure pipe to the lines and grades shown on the drawings and/or established in the field, and all flushing, testing, repairing, and required to ensure adequate and safe operation of the water system.

Section 3.02 PIPE CONDITION:

Certification of all tests required by the American Water Works Association shall be provided by the manufacturer. The three-edge bearing test will be required, upon request of the inspector. All pipe shall be standard lengths except for making connections to valves, fittings, and other such closures.

Any material that becomes damaged shall be replaced by the Contractor/Developer at his own expense. The Contractor/Developer shall be responsible for the safe storage of material furnished by or to him, and accepted by him, and intended for the work, until it has been incorporated in the completed project.

Section 3.03 DUCTILE IRON PIPE:

Sub-section A. Materials:

Ductile iron pipe shall conform to all requirements of ANSI/AWWA C151/A21.51, "American National Standard for Ductile Iron Pipe, Centrifugally Cast in Metal Molds or Sand-Lined molds, for Water or Other Liquids." Minimum pressure Class will be 250 for pipes larger than 12-inch diameter. Pipes of 12-inch diameter and smaller shall be pressure Class 350. If thickness class pipe is used, pipes of diameters from 4-inches through 10-inches shall be minimum Class 51 and pipe from 12-inch diameter and larger shall be minimum Class 50.

All pipe shall be made of good quality Ductile Cast Iron and of such chemical composition and structure as is required to meet the physical and mechanical property requirements of the standard.

Required glands, gaskets, bolts and nuts shall be furnished.

The nominal laying length of the pipe shall be eighteen feet (18'). The maximum allowable pipe deflection shall be three degrees (3°) per joint with a recommended deflection of two degrees (2°) or less per joint. Pipe deflection shall be limited to two degrees (2°) at crosses, valves, couplings, and fire hydrants. Except where specifically noted on the plans, ductile iron pipe shall have bell and spigot ends. Ductile iron pipe underground shall be protected against external corrosion by loose polyethylene sleeves in accordance with AWWA C 105.

Sub-section B. Joints:

(1) Mechanical Joints: All mechanical joints shall meet requirements of ANSI/AWWA C111/A21.11. All gasket surfaces shall be smooth and free from imperfections. Gaskets shall conform to tests in accordance with specifications and shall be less than one year old.

(2) Push-on Joints: All push-on joints shall meet the requirements of ANSI/AWWA C111/A21.11. Gaskets shall be free from defects and not over one year old.

Lubricants shall be non-toxic and have no deteriorating effects on gasket materials. It shall not impart taste to water in a pipe. It shall conform in every way to ANSI 21.1

(3) Flanged Joints: Flanges shall meet the requirements of ANSI/AWWA C110/A21.10, "American National Standard for Ductile Iron and Gray Iron Fittings, 3-inch Through 48-inch for Water and Other Liquids." Flanged joints shall be bolted firmly with machine, stud or cap bolts of

proper size. Flange may be cast integrally with the pipe or may be screwed on threaded pipe. Flanges shall be faced and drilled and of proper dimensions for size and pressure required. Bolts and nuts, unless otherwise specified, shall be made of the best quality refined iron or metal steel and have clean, well-fitting threads. Bolts will be provided with standard hexagonal nuts and standard hexagonal heads. Bolts shall be of the diameter required for each flange and when installed shall be of length so that no more than 3/8-inch nor less than 1/8-inch extends past face of nut. All buried fittings having steel bolts shall be coated with a non-oxide wax and wrapped with polyethylene.

Gaskets shall be rubber, either ring or full face, and are 1/8th-inch thick. A gasket for each flanged joint of proper size as shown on the drawings. Gaskets shall conform to ASTM D-412.

Sub-section C. <u>Coatings and Linings for Ductile Iron Pipe:</u>

All exterior surfaces of pipe and fittings shall be coated with hot coal tar approximately 1 mil thick. All interior surfaces shall be cement mortar lined with a standard thickness according to ANSI/AWWA C104/A21.4-80.

Sub-section D. <u>Corrosion Protection and Soil Tests:</u>

When the Public Works/Engineer determines that a potential for corrosive conditions exists such as poor drainage or reactive soils, pipe and fittings shall be incased in polyethylene wrap. Polyethylene encasement of ductile iron pipe shall meet the requirements of ANSI A21.5 or AWWA C105.

Sub-section E. <u>Flanges:</u>

Flanges when required shall conform to ANSI/AWWA C115/A21.15-83.

Sub-section F. <u>Fittings:</u>

Fittings for Ductile Iron Pipe shall conform to the provisions of ANSI/AWWA C110/A21.10-82 or C153/A21.53-58.

Sub-section G. <u>Magnetic Locator Tape:</u>

All pipe shall include a 3-inch magnetic locator tape installed in the pipeline trench approximately 12-inches above the pipe. Identification tape shall be furnished with white or black printing on a colored field having the words: “CAUTION: POTABLE WATER - BELOW.”

Sub-section H. <u>Tracer Wire:</u>

All pipes shall include a tracer wire installed at the same elevation as the centerline of the pipe. The wire shall be 14 gauge copper wire. The tracer wire shall be installed adjacent to and paralleling the pipe at a distance of no more than 6” from the outside edge of the pipe. At all tees the wire shall be properly spliced using a grease cap and wire nut or soldering. At all valves and fire hydrants the wire shall be brought up into the valve box just under the valve cover where it will be easily accessible.

Section 3.04 PVC PIPE:

Sub-section A. <u>Materials:</u>

Pipe for the transmission and distribution of water shall be manufactured in accordance with AWWA C900-81, "AWWA Standard for Polyvinyl Chloride (PVC) Pressure Pipe, 4-inch through 12-inch, for Water". The PVC pipe shall have a cast-iron-pipe-equivalent outside diameter. PVC pipe 14-inches and larger shall be manufactured in accordance with AWWA C905-88, "AWWA Standard for Polyvinyl Chloride (PVC) Water Transmission Pipe, Nominal Diameters 14-inch through 36-inch". All PVC pipe 4-

inch and larger shall be DR. 18 with a working pressure of 150 PSI. Pipes smaller than 4-inch diameter shall be schedule 40 PVC. All pipes being installed west of 2000 West within Syracuse City limits shall be DR 14.

PVC Class 900 pipe shall meet the requirements of ASTM D 2241 except that the pipe shall have an outside diameter of ductile iron pipe sizes instead of iron pipe sizes. The PVC pipe shall meet the requirements of the AWWA C 900 with pressure clasp of 150 and the D.R. of not less than 18. At least 85 per cent of the total footage shall be furnished in standard 20-foot lengths.

Sub-section B. Joints:

Joints shall be push on rubber gasket type. Lubrication shall be water soluble, non-toxic, non-objectionable in taste and odor imparted to the water, non-supporting of bacteria growth, and have no deteriorating effect on the PVC pipe or rubber gaskets.

Sub-section C. Fittings:

All fittings to be used with the PVC pipe shall be the same as fittings for Ductile Iron Pipe and shall conform to the provisions of ANSI/AWWA C110/A21.10-82 or C153/A21.53-58.

Sub-section D. Warning Tape:

All pipe shall include a 3-inch warning tape installed in the pipeline trench approximately 12-inches above the pipe. Identification tape shall be furnished with white or black printing on a colored field having the words: "CAUTION: POTABLE WATER - BELOW."

Sub-section E. Tracer Wire:

All pipe shall include a tracer wire installed at the same elevation as the centerline of the pipe. The wire shall be single strand 14 gauge coated copper. The tracer wire shall be installed adjacent to and paralleling the pipe at a distance of no more than 6" from the outside edge of the pipe. At all tees the wire shall be properly spliced using a grease cap and wire nut or soldering. At all valves the wire shall be brought up into the valve box just under the valve cover where it will be easily accessible.

Section 3.05 HDPE PRESSURE PIPE:

Sub-section A. Materials:

HDPE Pressure Pipe. High density polyethylene piping shall be Iron Pipe Size (IPS) nominal diameter pressure PE3408 HDPE pipe and manufactured from resins exhibiting a cell classification of PE 345464C conforming to ASTM D-3350. Manufacturing workmanship shall conform to ASTM F-714 and ANSI/AWWA C906.

PE3408 HDPE pipe shall be DR 13.5 and shall be produced in standard 40-ft lengths. The tolerance on length shall be 61% when the pipe is at 738F.

The high density polyethylene compound used in the manufacture of pressure water HDPE pipe shall meet or exceed cell classification 345464C in accordance with ASTM D3350 with a HDB rating of 1600 psi at 73°F.

PE3408 HDPE pipe shall be black in color and shall contain a minimum of 2½ percent carbon black for ultraviolet protection.

Sub-section B. Joints:

Plain end PE3408 HDPE pipe shall be joined using the manufacturer's recommended butt fusion procedure that is based on ASTM D2657 and PPI TR-33. Butt fusion joining shall be performed only by persons that have been qualified in the manufacturer's recommended butt fusion procedure by having made example joints that pass destructive joint quality tests.

HDPE pipe shall not be joined by solvent cements, adhesives (such as epoxies) or threaded connections. All joining methods shall be capable of conveying water at a minimum of 2.0 times the working pressure rating of the pipe.

All butt fusion joining equipment shall be equipped with a data logger that records butt fusion machine temperature, pressure, and time parameters for each field butt fusion joint. Data logger records for all field joints shall be downloaded and shall become part of the job records. Using the same pipe and equipment used in the field, a test joint shall be made and destructively tested. If the test joint fails destructive tests, new test joints shall be made and tested until passing results are obtained. Data logger results of the successful test joint shall be compared to the data logger record of field joints. Any field joint that fails data logger comparison shall be cut out and redone at Contractor expense.

When joints other than butt fusion are specified, joining by electrofusion or mechanical means such as flanges, MJ adapters, or mechanical couplings shall be used. Electrofusion and mechanical joints shall be assembled in accordance with the joining device manufacturer's instructions. Mechanical coupling joints shall provide restraint against disjoining that exceeds the pullout force generated from thermal contraction and pipe pressurization. Mechanical joints shall require the use of stainless steel bolts.

Sub-section C. Fittings:

1. Use ductile iron flanged fittings where shown on the Drawings. Flanged fittings shall conform to ANSI/AWWA C110/A21.10 ductile-iron and gray-iron fittings rated at 350 psi working pressure and gray-iron rated at 250 psi working pressure. Flange bolts shall be Type 316 stainless steel with gaskets to protect dissimilar metals.
2. Use Victaulic fittings and couplings where shown on the Drawings. Victaulic fittings for AWWA size pipe shall be supplied with rigid radius grooves in accordance with ANSI/AWWA C-606. Fittings conform to ANSI A21.10/AWWA C-110 for center-to-end dimensions and AWWA C-153 or ANSI 21.10/AWWA C-110 for wall thickness. Fittings shall be rated for working pressures to 350 psi (ductile iron) in 3 - 12" sizes and to 250 psi (gray iron) in sizes 3 - 12", and to 250 psi (ductile iron), or 150 psi (gray iron) for 14" and larger. Use Style 31 couplings (two-piece for sizes up to 12" and four-piece for sizes up to 20") with Grade "M" FlushSeal® gaskets.

Use HDPE fittings where shown on the Drawings. PE3408 HDPE fittings shall be plain end for butt fusion joining and shall be molded in accordance with ASTM D3261 or fabricated in accordance with ASTM F2206. The high density polyethylene compound used in the manufacture of non-pressure or pressure PE3408 HDPE molded and fabricated fittings shall meet or exceed cell classification 345464C in accordance with ASTM D3350 with a HDB rating of 1600 psi at 73°F. Recycled materials are prohibited.

a. PE3408 HDPE fittings shall contain a minimum of 2½ percent carbon black for ultraviolet protection.
b. At the point of fusion, PE3408 HDPE fittings shall have a minimum wall thickness that is not less than the mating pipe minimum wall thickness, and not more than 30% greater than the mating pipe wall thickness.
c. PE3408 HDPE fittings for pressure water shall have the same pressure rating as the mating pressure pipe. Pressure de-rated fittings are prohibited. Full pressure rating shall be provided with additional wall thickness in the fitting body. External reinforcement or encasement is not permitted for pressure up-rating purposes.
d. In Cul-de-Sacs, or locations where the pressure main is permanently terminated, a fused cap will be required. At locations where the pressure main is temporarily dead-ended, a fuse flange and blind flange will be required.

Sub-section D. Magnetic Locator Tape:

All pipe shall include a continuously connected 3-inch magnetic locator tape installed in the pipeline trench approximately 12-inches above the top of pipe. Identification tape shall be furnished with white or black printing on a blue colored field having the words: "CAUTION: POTABLE WATER BELOW"

Sub-section E. Tracer Wire:

A minimum 14 gage solid insulated copper wire shall follow all non-metallic pipes and be connected to all valve and fire hydrants and service laterals.

Sub-section F. Service Connections:

All service tap materials shall be formed from the same material as the HDPE main. Service taps shall be installed only by persons who have been adequately trained by the pipe or equipment supplier or a trained technician provide by the pipe or equipment supplier. Fusing methods shall conform to the recommendations of the pipe manufacturer.

Service taps on HDPE mains twelve inches (12") and smaller, inside diameter, are to be installed by side fusion. Service taps on HDPE mains sixteen inches (16") and larger, inside diameter, may be attached by socket fusion or side-wall fusion. Side-wall fusion will require the use of a self-tapping service tee connection which incorporates a brass cutter for tapping the HDPE main which retains the coupon. Socket fusion procedures shall not allow the service to protrude beyond the inside of the pipe wall. The polyethylene service tubing shall be attached to the tee by fusing or mechanical coupling as appropriate.

Section 3.06 OTHER PIPE MATERIALS:

Steel Pipe. Steel pipe shall conform to the current AWWA Specification C 201. Steel piping shall not be used for culinary water mains.

Concrete pipe and cast iron piping shall not be used for culinary water purposes.

Section 3.07 PIPE INSTALLATION:

Sub-section A. Cutting:

Cutting of pipe for closure pieces or for other reasons shall be done in a neat and workmanlike manner by a method recommended by the manufacturer. After cutting, the pipe shall be beveled and filed to prevent gasket damage in joint assembly.

Sub-section B. Dewatering of Trench:

Where water is encountered in the trench, it shall be removed during pipe laying operations and the trench so maintained until the ends of the pipe are sealed. See "Control of Groundwater" in Division 2 Trench - Excavation and Backfill.

Sub-section C. Laying of Pipe:

The pipe and pipe coating (where applicable) shall be inspected for defects before installation. Any defects shall be repaired or the pipe shall be replaced, whichever is deemed necessary by the Public Works Representative/Engineer.

All pipes shall be laid and maintained to the required lines and grades with fittings and valves at the required locations. The pipes shall be installed with a 36-inch minimum cover from finished road surface for culinary water. The Developer/Contractor shall be responsible to install the pipeline to the alignment set

by the Public Works Director/Engineer or as shown on the Drawings. Maximum depth shall be 6 feet unless otherwise approved by Engineer or Inspector.

Unless otherwise directed, pipe shall be laid with bell ends facing the direction of laying, and for lines on an appreciable slope, bells shall, at the discretion of the Engineer, face upgrade.

All pipes, fittings and valves shall be carefully lowered from the truck when unloading or when installing into the trench. This should be done one piece at a time in order to prevent damage to pipe materials and protective coatings and linings. Under no circumstances shall materials be dropped or dumped from the truck or into the trench.

The Developer/Contractor shall take the necessary precautions such that foreign materials do not enter into the pipe. No debris, tools, or other materials shall be placed in the pipe during laying operations. When laying of pipe is not in progress, the pipe shall be closed by a water-tight plug.

Maximum deflections at pipe joints shall not exceed the joint specifications of AWWA C600 of latest revision, or the recommendations of the pipe manufacturer.

Deflections in PVC pipe shall be made by longitudinal bending of the barrel of the pipe rather than deflecting the pipe joints. Longitudinal bending shall be limited to eighty percent (80%) of the manufactures recommended maximum bending radius. Wherever necessary to deflect pipe from a straight line, either in the vertical or horizontal plane to avoid obstructions, to plumb stems, or where long radius curves are permitted, the degree of deflection shall be approved by the Engineer or Inspector.

Temporary support, adequate protection and maintenance of all underground and surface utility structures, drains, sewers and other obstructions encountered in the progress of the work shall be furnished by the Contractor at his own expense under the direction of the Engineer.

Wherever existing utility structures or branch connections leading to main sewers or to main drains, or other conduits, ducts, pipes, or structures present obstruction to the grade and alignment of the pipe, they shall be permanently supported, removed, relocated or reconstructed by the Contractor through cooperation with the owner of the utility, structure or obstruction involved. In those instances where their relocation or reconstruction is impracticable, a deviation from line and grade will be ordered, and the change shall be made in the manner directed by the Engineer. Connections to private residences shall be cut and looped around the pipe line.

All open ends of pipe shall be closed by approved means, and no trench water shall be permitted to enter the pipe under any circumstance. Any pipe that is contaminated shall require pipe to be pulled and replaced.

Cutting of pipe for inserting valves, fittings or closure pieces shall be done in a neat and workmanlike manner without damage to the pipe. All cut edges shall require use of de-burring tool to provide smooth edge.

Jointing of all pipe shall be as recommended by the manufacturer. All pipes shall be handled in such a way so as to prevent damage to the coating and lining. Refer to backfilling specifications for proper bedding and compaction. Mega lugs and thrust blocking shall be applied at all tees, plugs, caps and at bends deflecting 22 1/2 degrees or more. Prevention of concrete adhesion by means of 10 mil plastic sheeting to protect valves or pipe material shall be directed by the City Inspector and all mechanical bolts shall be greased for future maintenance.

Precautions must be taken to protect pipe interiors, fittings, and valves against contamination. Pipe delivered for construction shall be strung so as to minimize entrance of foreign material. When pipe laying is not in progress, as for example at the close of the day's work, all openings in the pipeline shall be closed by water tight plugs. Joints of all pipe in the trench shall be completed before work is stopped. If water accumulates in the trench, the plugs shall remain in place until the trench is dry.

Extreme care and thorough inspection shall be practiced during the laying of water mains to prevent small stones, pieces of concrete, particles of metal, or other foreign material that may gain access to mains newly laid or repaired.

Sub-section D. Pipe Bedding:

All pipes shall be protected from lateral displacement and possible damage resulting from impact or unbalanced loading during backfilling operations by being adequately bed in accordance with Division 2 of these specifications.

In the event trench materials are not, in the judgment of the Public Works Representative/Engineer, satisfactory for pipe bedding, imported granular bedding will be required. See Division 2 of these specifications.

Sub-section E. Thrust Blocking:

Thrust blocking shall be applied at all tees, valves, plugs, caps and at bends deflecting 11 1/4 degrees or more on pipe sizes 4 inches in diameter and greater. The fitting shall be encased in a 12 mil protective plastic wrap before the thrust block is poured. Reaction blocking shall be concrete having a compressive strength of not less than 4,000 pounds per square inch at 28 days. Blocking shall be placed between undisturbed soil and the fitting to be anchored. The area of bearing on the pipe and on the ground shall be as shown in the Drawings. The blocking shall be so placed that the pipe and the fittings will be accessible for repair.

Sub-section F. Connections to Existing Water Lines:

Information on the drawings regarding existing water lines is taken from "record" drawings from the city or utility company files and may or may not be accurate as to size, type of material or location. The Developer/Contractor will be responsible to determine the proper fittings and materials required, obtain the Public Works Representative/Engineer's approval of the planned connection, and perform the construction in a suitable fashion. Where fitting sizes, such as tees and crosses, are shown on the plans, those sizes will be used. However, no attempt has been made to show all needed fittings or materials. Developer/ Contractor will be responsible to give at least 24 hour notice to residents of any water service interruption.

Section 3.08 WATER SERVICE LATERALS

Water service laterals shall be constructed with materials specified and at the locations shown on the Standard Drawings or at the actual location established during construction.

Pipe for culinary water service laterals shall be three-quarters of an inch (3/4") copper or larger and shall comply with ASTM Specification B88.

Services shall be identified for each lot by size and location. Copper lines shall be installed form saddle connection to meter base. All fittings on the downstream side of the meter location shall be brass and installed as outlined in the Standard Drawings and indicated herein.

Sub-section A. Extent of Laterals:

New water service laterals shall be located at the center of the lot and shall extend from the water main to ten-feet (10’) past the property line. When the location of the service lies within the driveway, it shall be relocated. The lateral shall be installed prior to the installation of the curb and sidewalk but the meter setter, box and cover shall not be installed until after the curb in installed. A two-inch (2") by four-inch (4") by six-foot (6') marker, with the top twelve-inches (12") painted blue, shall be installed to clearly mark the end of each lateral line. Copper services shall not have any joints between the corporation stop at the main and the meter setter.

Water service laterals relocated during construction of new pipelines shall extend from the water main to the water meter if the existing service is other than copper or is in poor condition. Copper water services shall not have any joints between the corporation stop and the meter.

Sub-section B. Excavation and Backfill:

Trench excavation and backfill shall conform to the applicable paragraphs of Division 2. Bedding shall meet the requirements of Division 2.

Sub-section C. Connection to Main:

Connections of services to main lines shall be an all Brass tapping saddle for PVC mains, or direct tap (with CC thread) for ductile iron mains. All connections shall be made using pack joints (compression) type fittings or Insta- Tite connections. The corporation stop shall be a three-quarter inch (3/4") Mueller H-15008 "CC" Pack joint or an Insta-Tite connection for service saddle tap.

On existing services the existing connection to main will be used unless damaged or leaking.

Sub-section D. Meter Setter, Box and Cover:

The lateral shall be installed prior to the installation of the curb and sidewalk. The meter setter shall be Ford VBHC 2184433. The meter box shall be 18-inch (18") diameter by thirty-six-inch (36") high corrugated with groove to fit over the inlet and outlet line. The meter cover to be D&L Supply L-2240 Reader Lid. Cover to be three-eighths-inch (3/8") above top back of curb. Centerline of cover shall be midway between the back of curb and walk. The cover shall be marked "Water." Meter boxes may be concrete or PVC (80 psi PIP) with smooth exterior

Meter type sensus 5/8 setter to be mueller as typical or 1 inch meter as approved by engineer

Protection. Contractor shall be responsible to ensure that all meter boxes are protected from physical damage during construction.

All Water Meter Boxes shall have physical protection surrounding the facility to prevent damage from construction activities. This protection should remain in place until the final inspection of the building. All meter lids shall remain closed and on the meter box which is only accessed by authorized personnel (City Employees). Upon a water service request a meter will be set and turned on for construction use. Meters will not be set if the meter box setter and lid is damaged or not found in accordance to the development standards. Not more than one grade ring is to be used in the height adjustment. Setters shall be free of dirt to within 12 inches of the meter area. The use of jumpers is prohibited. It will be the responsibility of the contractor/developer to have means of turning on & off the water outside of the meter box on the owner side of the meter box assembly.

Any meter boxes grouped into a central location should have permanently attached by copper wire to the meter setter a brass tag stamped with the correct address of the building in which it serves.

Sub-section E. Special Joints and Fittings:

1. Flared. The use of flare fittings must be approved by Public Works.

2. Solder and Sweat Joints. Joints in copper tubing shall be made by the appropriate use of approved brass or copper fittings. Surface to be joined by soldering shall be thoroughly cleaned bright by manual or mechanical means. The joints shall be properly fluxed with an approved non-corrosive type flux and made up with approved solder. All solders and fluxes shall not have a lead content that exceeds current EPA guidelines.

3. Copper Tubing to Screw Pipe Joints. Joints from copper tubing to threaded pipe shall be made by the use of brass adapter fittings.

Sub-section F. Separation:

Water service lines shall not be run or laid in the same trench as the building sewer lateral. Any exceptions shall be approved by Public Works/ Engineer. At all locations there shall be at least twelve (12) inches of separation **vertically** above the sewer lateral and ten (10) feet **horizontal** separation. In cases where a private sprinkler system is tied into the culinary service it shall be at least three (3) feet beyond the meter on the property side.

Sub-section G. Flushing, Testing and Disinfecting:

Flushing, testing and disinfecting shall be done at the time the water main is flushed, tested and disinfected. The end of the trench where the stub out past the meter is located shall be left open to allow for discharging water out of the service line for proper flushing and to insure that the line has been adequately disinfected. The line shall be flushed thoroughly following installation. Flushing, testing and disinfecting shall conform to the applicable paragraphs of this division.

On existing services the Developer/Contractor shall take precautions to prevent contamination of the pipe and connections during installation. The line shall be flushed thoroughly following installation.

Treated water shall be retained in the pipe long enough to destroy all nonsporeforming bacteria. This period should be at least 24 hours and preferably longer, as may be directed. After the chlorine-treated water has been retained for the required time, the chlorine residual at the pipe extremities and at other representative points should be at least 25 ppm.

Sub-section H. Damage and Repair of Water Mains and Appurtenances:

The Developer/Contractor shall be responsible for any damage to water mains and water facilities caused by his operations. The Developer/Contractor may be relieved of the responsibility under the following conditions:

(1) He has not excavated below or beyond the required excavation lines, and
(2) He has given proper and timely notice of his work plans, and
(3) He has used reasonable care, and cooperated, minimizing the damage.

Any damage to water gates, hydrants, valve chambers, meter boxes, and other surface appurtenances that result from the Developer/Contractor's operation shall be its sole responsibility.

Section 3.09 FLUSHING, DISINFECTING, AND TESTING:

Sub-section A. Flushing:

All foreign matter or dirt shall be removed from the inside of the pipe before it is lowered into its position in the trench, and it shall be kept clean by approved means during and after laying. All new water systems or extensions to existing systems shall be thoroughly flushed before being placed in service. Flushing shall be accomplished through hydrants, or end of line blow-off assemblies at a minimum flushing velocity of 2.5-feet per second. See chart below.

FLOW RATE AND OPENINGS TO FLUSH PIPELINES (40- psi Residual Pressure)

Pipe Size (inches)	Flow Required to Produce 2.5 fps velocity (gpm)
2	26
4	100
6	220
8	390
10	610
12	880
14	1,200
16	1,565
18	1,980
20	2,450
24	3,525
30	5,507

Sub-section B. <u>Disinfection:</u>

After flushing, all culinary water lines shall be disinfected by chlorination. Chlorination shall provide a minimum of 25 ppm residual after 24 hours contact in the pipeline. This may be expected with an application of 50 ppm, although some conditions may require more. Chlorine in the form of a 1% slurry of high-test calcium hypochlorite (HTH, Perchloron, Pittchlor, etc. which are 70% available chlorine by weight) shall be fed into the pipeline in such a manner as to mix with the water flowing in the pipeline. (A 1% slurry - 10,000 ppm - results from mixing one pound of calcium hypochlorite with 8.40 gallons of water.) When specifically authorized by the City, chlorine pellets or powder may be used. Rechlorination of pipes will always require a slurry.

The following table provides information as to the required quantity of slurry to be used per 100 feet of pipe to provide a chlorine concentration of 50 ppm:

Pipe Size (in.)	Vol. of 100 ft. Length (gal)	Required Amount of 1 % Chlorine Slurry (gal)
1 ½	9.18	0.07
2	16.32	0.12
2 ½	25.50	0.18
3	36.73	0.26
4	65.28	0.47
6	146.90	1.05
8	261.10	1.87
10	408.10	2.92
12	587.60	4.20

Calculation: (8.4 lb/1 gal water)*(8.4 gal water) + 1 lb HTH = 71.5 lb slurry; (71.5/10,000)*(gal)=gal of slurry

During the process of chlorinating the pipeline, all valves and other pipeline appurtenances shall be operated several times to provide sufficient contact with the chlorinating agent. After chlorination, the mains shall be drained and flushed thoroughly according to Section A in this Specification above and, if necessary, re-chlorinated until a satisfactory bacteriological test is obtained.

The City will pay for the initial bacteriological test. If the initial test fails, the Contractor/Developer will pay for subsequent tests.

Disinfection shall conform to the requirements of AWWA C651-05 (or latest edition).

(a) General. Disinfection of water mains shall be done in accordance with "Procedure for Disinfecting Water Mains", AWWA - C651. The interior of all pipe, fittings and other accessories shall be kept as free as possible from dirt and foreign matter at all times.
(b) Chlorination.

(1) Form of Chlorine and Means of Application. Before being placed in service, all new water mains shall be chlorinated. If the available water is more alkaline than pH 8, the holding time in the main shall be increased at the discretion of the Engineer.

(2) Form of Applied Chlorine. Either of the following forms of chlorine may be used, subject to the approval of the Engineer: Liquid Chlorine, Calcium Hypochlorite Tablets

(3) Methods of Chlorine Application.

(a) Continuous Feed Method. This method is suitable for general application.

Pipe Size (in.)		100% Chlorine (lb)		1 % Chlorine Solutions (gal.)
4		0.13		0.16
6		0.30		0.36
8		0.54		0.65
10		0.85		1.02
12		0.12		1.44

TABLE 1: Chlorine required to produce 25 mg/l concentration in 100 ft. of Pipe - by Diameter

Water from the existing distribution system or other approved sources of supply shall be made to flow at a constant, measured rate into the newly-laid pipeline. The water shall receive a dose of chlorine, also fed at a constant, measured rate. The two rates shall be proportioned so that the concentration in the water in the pipe is maintained at a minimum of 50 mg/l available chlorine. To assure that this concentration is maintained, the chlorine residual should be measured at regular intervals in accordance with the procedures described in the current edition of Standard Methods and AWWA M12 - Simplified Procedures for Water Examination.

Table 1 gives the amount of chlorine residual required for each 100 ft. of pipe of various diameters. Solutions of 1 per cent chlorine may be prepared with sodium hypochlorite or calcium hypochlorite. The latter solution requires approximately 1 lb. of calcium hypochlorite in 8.5 gal. of water.

During the application of the chlorine, valves shall be manipulated to prevent the treatment dosage from flowing back into the line supplying the water. Chlorine application shall not cease until the entire main is filled with the chlorine solution. The chlorinated water shall be retained in the main for at least 24 hrs. during which time all valves and hydrants in the section treated shall be operated in order to disinfect the appurtenances. At the end of this 24 hr. period, the treated water shall contain no less than 25 mg/l chlorine throughout the length of the main

(b) Tablet Method. Tablets are placed in each section of pipe and also in hydrants, hydrant branches, and other appurtenances. They shall be attached by an adhesive, except for the tablets placed in hydrants and in the joints between the pipe sections. All the tablets within the main must be at the top of the main. If the tablets are fastened before the pipe section is placed in the trench, their position should be marked on the section to assure that there will be no rotation. In placing tablets in joints, they are either crushed and placed on the inside annular space, or, if the type of assembly does not permit, they are rubbed like chalk on the butt ends of the sections to coat them with calcium hypochlorite.

The adhesive may be Permatex No. 1 or any alternative approved by the Engineer. There shall be no adhesive on the tablet except on the broad side next to the surface to which the tablet is attached.

(4) Filling and Contact. When installation has been completed, the main shall be filled with water at a velocity of less than 1-ft/sec. This water shall remain in the pipe for at least 24 hr.

Valves shall be manipulated so that the strong chlorine solution in the line being treated will not flow back into the line supplying the water.

	Diameter of Pipe (in.)					
Length of Section (ft.)	2	4	6	8	10	12
13 or less	1	1	1	1	2	3
18	1	1	1	2	3	4
20	1	1	1	2	3	4
30	1	1	2	3	4	6
40	1	1	2	4	5	7

TABLE 2: Number of 5 gram calcium Hypochlorite Tablets Required for Dose of 25 Mg/l (Based on 3 1/4 grams available chlorine per tablet).

Following chlorination, all treated water shall be thoroughly flushed from the newly-laid pipeline at its extremities until the replacement water throughout its length shall, upon test, be proved comparable to the quality of water served the public from the existing water supply system and approved by the public health authority having jurisdiction. This quality of water delivered by the new main should continue for a period of at least two full days as demonstrated by laboratory examination of samples taken from a tap located and installed in such a way as to prevent outside contamination. Samples should never be taken from an unsterilized hose or from a fire hydrant because such samples seldom meet current bacteriological standards.

Should the initial treatment fail to result in the conditions specified above, the chlorination process shall be repeated until such results are obtained.

Sub-section C. <u>Pressure Test:</u>

All newly laid pipes or any valved section thereof shall be subjected to a hydrostatic pressure. A leakage test shall be conducted concurrently with the pressure test.

(a) Pressure During Test. After the pipe has been laid and partially backfilled, all newly laid pipe, or any valved section of it shall, unless otherwise specified, be subjected to maximum operating pressure.

(b) Duration of Pressure Test. The duration of each pressure test shall be at least 120 minutes at 200 psi. If service connections are installed then 150 psi. shall be allowed at 120 minutes.

(c) Procedure. Each valved section of pipe shall be slowly filled with water and the specified test pressure, measured at the point of lowest elevation, shall be applied by means of a pump connected to the pipe in a satisfactory manner. The pump, pipe connections and all necessary apparatus shall be furnished by the Contractor.

(d) Expelling Air before Test. Before applying the specified test pressure, all air shall be expelled from the pipe. To accomplish this, taps shall be made, if necessary, at points of highest elevation, and afterward tightly plugged.

1. Test Pressure Restrictions:

Test pressures shall:

a) Not be less than 150 psi pressure at the highest point along the test section.

b) Not exceed pipe or thrust restraint design pressures.

c) Be of at least 2-hour duration.

d) Not vary by more than plus or minus five (± 5) psi for the duration of the test.

e) Not exceed twice the rated pressure of the valves or hydrants when the pressure boundary of the test section includes closed gate valves or hydrants.

f) Not exceed the rated pressure of the valves when the test boundary of the test section includes closed, resilient-seated gate valves or butterfly valves.

2. Pressurization:

Each valved section of pipe shall be slowly filled with water to the specified test pressure, based on the elevation of the lowest point of the line or section under test and corrected to the elevation of the test gage, by means of a pump connected to the pipe in a manner satisfactory to the Public Works Representative/Engineer.

3. Air Removal:

Before applying the specified test pressure, air shall be expelled completely from the pipe, valves, and hydrants. If permanent air vents are not located at all high points, the Developer/Contractor shall install corporation cocks at such points so that the air can be expelled as the line is filled with water. After all the air has been expelled, the corporation cocks shall be closed and the test pressure applied. At the conclusion of the pressure test, the corporation cocks shall be removed and plugged with brass plugs.

4. Examination:

All exposed pipe, fittings, valves, hydrants, and joints shall be examined carefully during the test. Any damaged or defective pipe, fittings, valves, or hydrants that are discovered following the pressure test shall be repaired or replaced with sound materials and the test shall be repeated until it is satisfactory to the Owner.

Sub-section D. <u>Leakage Test:</u>

A leakage test shall be conducted concurrently with the pressure test.

1. Leakage Defined:

Leakage shall be defined as the quantity of water that must be supplied into the newly laid pipe, or any valved section thereof, to maintain pressure within 5 psi of the specified test pressure after the air in the pipeline has been expelled and the pipe has been filled with water.

2. Allowable Leakage:

No pipe installation will be accepted if the leakage is greater than that determined by the following formula:

$$L = \frac{SD(P)^{0.5}}{133{,}200}$$

in which L is the allowable leakage, in gallons per hour; S is the length of pipeline tested in feet; D is the nominal diameter of the pipe, in inches; and P is the average test pressure during the leakage test, in pounds per square inch gage.

a) Allowable leakage at various pressures is shown in Table 1.

b) When testing against closed metal-seated valves, an additional leakage per closed valve of 0.0078 gal/hr/in. of nominal valve size shall be allowed.

c) When hydrants are in the test section, the test shall be made against the closed hydrant **.**

TABLE 1

Allowable Leakage per 1000 ft. of Pipeline - gph

Avg. Test Pressure *psi (Bar)*	Nominal Pipe Diameter—*in.*															
	3	4	6	8	10	12	14	16	18	20	24	30	36	42	48	54
450 (31)	0.48	0.64	0.95	1.27	1.59	1.91	2.23	2.55	2.87	3.18	3.82	4.78	5.73	6.69	7.64	8.60
400 (28)	0.45	0.60	0.90	1.20	1.50	1.80	2.10	2.40	2.70	3.00	3.60	4.50	5.41	6.31	7.21	8.11
350 (24)	0.42	0.56	0.84	1.12	1.40	1.69	1.97	2.25	2.53	2.81	3.37	4.21	5.06	5.90	6.74	7.58
300 (21)	0.39	0.52	0.78	1.04	1.30	1.56	1.82	2.08	2.34	2.60	3.12	3.90	4.68	5.46	6.24	7.02
275 (19)	0.37	0.50	0.75	1.00	1.24	1.49	1.74	1.99	2.24	2.49	2.99	3.73	4.48	5.23	5.98	6.72
250 (17)	0.36	0.47	0.71	0.95	1.19	1.42	1.66	1.90	2.14	2.37	2.85	3.56	4.27	4.99	5.70	6.41
225 (16)	0.34	0.45	0.68	0.90	1.13	1.35	1.58	1.80	2.03	2.25	2.70	3.38	4.05	4.73	5.41	6.03
200 (14)	0.32	0.43	0.64	0.85	1.06	1.28	1.48	1.70	1.91	2.12	2.55	3.19	3.82	4.46	5.09	5.73
175 (12)	0.30	0.40	0.59	0.80	0.99	1.19	1.39	1.59	1.79	1.98	2.38	2.98	3.58	4.17	4.77	5.36
150 (10)	0.28	0.37	0.55	0.74	0.92	1.10	1.29	1.47	1.66	1.84	2.21	2.76	3.31	3.86	4.41	4.97
125 (9)	0.25	0.34	0.50	0.67	0.84	1.01	1.18	1.34	1.51	1.68	2.01	2.52	3.02	3.53	4.03	4.53
100 (7)	0.23	0.30	0.45	0.60	0.75	0.90	1.05	1.20	1.35	1.50	1.80	2.25	2.70	3.15	3.60	4.05

*If the pipeline under test contains sections of various diameters, the allowable leakage will be the sum of the computed leakage for each size.
**To obtain leakage in liters/hour, multiply the values in the table by 3.785.

3. Acceptance of Installation:

Acceptance shall be determined on the basis of allowable leakage. If any test of pipe laid discloses leakage greater than specified, the Developer/Contractor shall, at its own expense, locate and repair the defective material until the leakage is within the specified allowance.

All visible leaks are to be repaired regardless of the amount of leakage.

DIVISION 3A: PRESSURE IRRIGATION

Section 3A.01 GENERAL:

This division covers furnishing and installing pressure pipe as shown on the Drawings or established in the field, and all flushing, testing, repairing, as required to ensure adequate and safe operation of the water system. Certification of all tests required by the American Water Works Association shall be provided by the manufacturer. The three-edge bearing test will be required, upon request of the inspector. All pipe shall be standard lengths except for making connections to valves, fittings, and other such closures.

Section 3A.02 DUCTILE IRON PIPE:

Sub-section A. Materials:

Ductile iron pipe shall conform to all requirements of ANSI/AWWA C151/A21.51, "American National Standard for Ductile Iron Pipe, Centrifugally Cast in Metal Molds or Sand-Lined molds, for Water or Other Liquids." The minimum Pressure Class will be 200. If thickness class pipe is used, the minimum shall be Thickness Class 50.

All pipe shall be made of good quality ductile cast iron and of such chemical composition and structure as is required to meet the physical and mechanical property requirements of the standard.

Sub-section B. Joints:

1. Mechanical Joints: All mechanical joints and gaskets shall meet the requirements of ANSI/AWWA C111/A21.11. All gaskets shall be smooth and free of porous areas, foreign materials, and visible defects. Gaskets shall be less than one (1) year old.

2. Push-on Joints: All push-on joints and gaskets shall meet the requirements of ANSI/AWWA C111/A21.11. All gaskets shall be smooth and free of porous areas, foreign materials, and visible defects. Gaskets shall be less than one (1) year old.

Lubricants shall have no deteriorating effects on gasket materials. Lubricants shall conform to ANSI 21.11.

3. Flanged Joints: Flanges, when required, shall conform to ANSI/AWWA C115/A21.15-83. Flanged joints shall meet the requirements of ANSI/AWWA C110/A21.10, "American National Standard for Ductile Iron and Gray Iron Fittings, 3-inch Through 48-inch for Water and Other Liquids." Flanged joints shall be bolted firmly with machine, stud, or cap bolts of proper size. Flanges may be cast integrally with the pipe or may be screwed on a threaded pipe. Flanges shall be faced and drilled and dimensioned properly for the size and pressure required. Bolts and nuts, unless otherwise specified, shall be made of the best quality refined iron or steel, and have clean, well-fitting threads. Bolts will be provided with standard hexagonal nuts and standard hexagonal heads. Bolts shall be of the diameter required for each flange, and when installed shall be of length so that no more than three-eighths inch (3/8”) nor less than one-eighth inch (1/8”) extends past the face of the nut. All buried metallic fittings and bolts shall be coated with a non-oxide wax and wrapped with polyethylene.

Gaskets shall be rubber, either ring or full face, and shall be one-eighth-inch (1/8”) thick.

Sub-section C. Coatings and Linings for Ductile Iron Pipe:

All exterior surfaces of pipe and fittings shall be coated with hot coal tar at least one (1) mil thick. All interior surfaces shall be cement mortar lined with a standard thickness according to ANSI/AWWA C104/A21.4-80.

Sub-section D. Fittings:

Fittings for ductile iron pipe shall conform to the provisions of ANSI/AWWA C110/A21.10-82 or C153/A21.53-58. All elbows, 90º caps, and loops must be mega lugged. All fittings must be wrapped & greased before back fill. All fittings shall be Mechanical-Joint-(MJ)-type unless otherwise specified by the Public Works Representative/Engineer.

Sub-section E. Locator Tape:

All pipe shall include a 3-inch warning tape installed in the pipeline trench approximately 12-inches above the pipe. Identification tape shall be furnished with white or black printing on a colored field having the words: "CAUTION: IRRIGATION LINE BURIED BELOW"

Section 3A.03 PVC PIPE:

Sub-section A. Materials:

Pipe for the transmission and distribution of water shall be manufactured in accordance with AWWA C900-81, "AWWA Standard for Polyvinyl Chloride (PVC) Pressure Pipe, 4-inch through 12-inch, for Water:" PVC pipe fourteen-inches (14") and larger shall be manufactured in accordance with AWWA C905-88, "AWWA Standard for Polyvinyl Chloride (PVC) Water Transmission Pipe, Nominal Diameters 14-inch through 36-inch." All PVC pipe four-inch (4") and larger shall be dimension ratio (DR) 18 with a working pressure of 150 psi. The PVC pipe shall have a cast-iron-pipe-equivalent outside diameter. Pipe smaller than four-inches (4") shall be schedule 40 PVC.

Color of all pressure pipes for irrigation water shall be purple.

Pipe shall be standard dimension ration pressure rated PVC pipe (SDR-RP-PVC) conforming to the latest revision of ASTM D2241 and the National Bureau of Standard Product Standard PS 22-70. The pipe shall be PVC Class 900 pipe shall meet the requirements of ASTM D 2241 except that the pipe shall have an outside diameter of ductile iron pipe sizes instead of iron pipe sizes. The PVC pipe shall meet the requirements of the AWWA C 900 with pressure clasp of 150 and the D.R. of not less than 18. Pipe shall be bell and spigot, twin gasket. At least 85 per cent of the total footage shall be furnished in standard 20-foot lengths. Piping west of 2000 West. shall be D.R.14 or better.

Sub-section B. Joints:

Joints shall be push on rubber gasket type. Lubrication shall be water soluble, non-toxic, non-objectionable in taste and odor imparted to the water, non-supporting of bacteria growth, and have no deteriorating effect on the PVC pipe or rubber gaskets.

Jointing of all pipe shall be as recommended by the manufacturer. All pipes shall be handled in such a way so as to prevent damage to the coating and lining. Refer to backfilling specifications for proper bedding and compaction. Thrust blocking shall be applied at all tees, plugs, caps and at bends deflecting 22 1/2 degrees or more. Prevention of concrete adhesion by means of 10 mil plastic sheeting to protect valves or pipe material shall be directed by the City Inspector.

Sub-section C. Fittings:

All fittings to be used with the PVC pipe shall be the same as fittings for ductile iron pipe and shall conform to the provisions of ANSI/AWWA C110/A21.10-82 or C153/A21.53-58. All fittings shall be Mechanical-Joint-(MJ)-type unless otherwise specified by the Public Works Representative/Engineer.

Sub-section D. Locator Tape:

All pipe shall include a three-inch (3") locator tape installed in the pipeline trench approximately twelve inches (12") below the ground surface. This tape shall be prepared with white or black printing on a purple field, color Pantone 512C, having the words: "CAUTION: IRRIGATION LINE BURIED BELOW"

Sub-section E. Tracer Wire:

All pipe shall include a tracer wire installed at the same elevation as the centerline of the pipe. The wire shall be a 14 gauge solid insulated copper wire. The tracer wire shall be installed adjacent to and paralleling the pipe at a distance of no more than 6" from the outside edge of the pipe. At all tees the wire shall be properly spliced using a grease cap and wire nut or soldering. At all valves the wire shall be brought up into the valve box where it will be easily accessible. The City Public Works department shall oversee the connection points of the locator wire.

Section 3A.04 PIPE INSTALLATION:

Sub-section A. Cutting:

Cutting of pipe for closure pieces or for other reasons shall be done in a neat and workmanlike manner by a method recommended by the manufacturer. After cutting, the pipe shall be beveled and filed to prevent gasket damage in joint assembly.

Sub-section B. Dewatering of Trench:

Where water is encountered in the trench, it shall be removed during pipe-laying operations and until the ends of the pipe are sealed. See "Control of Groundwater" in Division 2 Trench - Excavation and Backfill.

Sub-section C. Laying of Pipe:

The pipe and pipe coating (where applicable) shall be inspected for defects before installation. Any defects shall be repaired or the pipe shall be replaced, whichever is deemed necessary by the Public Works Representative/ Engineer.

All pipe shall be laid and maintained to the required lines and grades with fittings and valves at the required locations. The pipes shall be installed with a 30-inch minimum cover from finished road surface for irrigation water. The Developer/Contractor shall be responsible to install the pipe line to the alignment set by the Public Works Director/Engineer or as shown on the Drawings.

All pipe, fittings, and valves shall be moved carefully, either when lowering from the truck, or when placing in the trench. Under no circumstances shall materials be dropped or dumped from the truck or into the trench.

The Developer/Contractor shall take the necessary precautions to ensure that foreign materials do not enter the pipe. No debris, tools, or other materials shall be placed in the pipe during laying operations. When laying of pipe is not in progress, the pipe shall be closed with a water-tight plug.

Maximum deflections at pipe joints shall not exceed the joint specifications of AWWA C600 of latest revision, or the recommendations of the pipe manufacturer.

Deflections in PVC pipe shall be made by longitudinal bending of the barrel of the pipe rather than deflecting the pipe joints. Longitudinal bending shall be limited to eighty percent (80%) of the manufacturer's recommended maximum bending radius.

Temporary support, adequate protection and maintenance of all underground and surface utility structures, drains, sewers and other obstructions encountered in the progress of the work shall be furnished by the Contractor at his own expense under the direction of the inspector.

Wherever existing utility structures or branch connections leading to main sewers or to main drains, or other conduits, ducts, pipes, or structures present obstruction to the grade and alignment of the pipe, they shall be permanently supported, removed, relocated or reconstructed by the Contractor through cooperation with the City. In those instances where their relocation or reconstruction is impracticable, a deviation from line and grade will be ordered, and the change shall be made in the manner directed by the Engineer. Connections to private residences shall be cut and looped around the pipe line.

Unless otherwise directed, pipe shall be laid with bell ends facing the direction of laying, and for lines on an appreciable slope, bells shall, at the discretion of the Engineer, face upgrade.

Pipe shall be laid so as to drain back into the main system when system is out of service. Additional drain lines or blow off valves will be required where gravity draining may not be possible.

Sub-section D. Pipe Bedding:

All pipes shall be protected from lateral displacement and possible damage resulting from impact or unbalanced loading during backfilling operations by being adequately bedding. In the event trench materials are not, in the judgment of the Public Works Representative/Engineer, satisfactory for pipe bedding, imported granular bedding will be required. See Division 2 of these specifications.

Sub-section E. Thrust Blocking:

Thrust blocking shall be applied at all tees, valves, plugs, caps, and at bends that deflect twenty-two and one-half (22-1/2°) degrees or more. The fitting shall be encased in a 12 mil protective plastic wrap before the thrust block is poured. Reaction blocking shall be concrete, having a compressive strength of not less than three-thousand (3000) psi at twenty-eight (28) days. Blocking shall be placed between undisturbed soil and the fitting to be anchored. The area of bearing on the pipe and on the ground shall be as shown in the Drawings. The blocking shall be placed so that the pipe and the fittings will be accessible for repair.

Sub-section F. Connections to Existing Water Lines:

Information on the Drawings regarding existing water lines is taken from "record" drawings from the city or utility company files and may or may not be accurate as to size, type of material, or location of those lines. The Developer/Contractor will be responsible to determine the proper fittings and materials required, obtain the Public Works Representative/Engineer's approval of the planned connection, and perform the construction in a suitable fashion.

Sub-section G. Replacement of Damaged Material:

Any material that becomes damaged shall be replaced by the Subdivider at his own expense.

Sub-section H. Responsibility for Safe Storage:

The Developer/Contractor shall be responsible for the safe storage of material furnished by or to him, and accepted by him, and intended for the work, until it has been incorporated in the completed project.

Section 3A.05 PRESSURE IRRIGATION SERVICE CONNECTION:

Pressure irrigation service laterals shall be constructed with materials specified and at the locations shown on the Standard Drawings or at the actual location established during construction. This section covers the installation of the service connection from the main to right-of-way line.

Sub-section A. Service Saddle Specifications:

(For use with AWWA C-900 C1 O.D. for PVC plastic pipe.)

All service clamps shall be brass O.D. control saddle or brass double strap tapping saddle for PVC mains, or direct tap (with CC Thread) O.D. sized for ductile iron mains.

A rigid liner shall be used inside of tubing at the compression fitting on all service connections.

All service clamps shall be manufactured of brass cast in conformance to AWWA C-800, General Section - 1, Paragraph 1.2 (ASTM B-62).

The two sides of the clamp shall be held together by high quality Silicon Bronze Hex Bolts (in sizes 1" and over) or Silicon Bronze Slotted Screws (in sizes under 1"), no dis-similar metals shall be allowed at this point thus eliminating the possibility of galvanic corrosion.

Sub-section B. Polyethylene Tubing:

Pipe for the transmission of irrigation water from main to utility box and from the utility box to the homeowner's property line shall be Polyethylene CTS tube. Polyethylene CTS tube shall be manufactured in accordance with the standard specification for Polyethylene (PEP plastic tubing as issued by the American Standard for Testing and Materials under ASTM D 2737 and AWWA C-901.

Material designation code: Polyethylene: PE 3408

Plastic Extrusion Compound: Type III, class C, Grade 34, as defined by ASTM D 1248

Standard pipe dimension ratio CTS (SDR) 9 - 200-psi pressure rating.

All tubing for service lines shall be cut and installed in a neat and workmanlike manner by a method recommended by the manufacturer. No joints will be allowed under sidewalks or other paved surfaces.

Tubing shall be WESTFLEX PE 3408 Gold Label or equivalent.

Sub-section C. Compression Connection:

(a) The interior surface of the coupling nut, including threads, shall have a baked on, fluorocarbon coating to reduce assembly friction and prevent the gasket from turning and twisting during tightening. The nut shall bottom on a cast or machined shoulder on the body when properly assembled. This design will provide a visual check to assure connection is properly assembled.

(b) The sealing gasket shall be of molded synthetic rubber (ASTM D-2000) with molded in place bronze spring (ASTM A-134 Alloy #6) to eliminate the possible cold flow of the gasket between the pipe and fitting. A gripper band of hardened stainless steel (ANSI Type 401) shall be fitted into the gasket. When the gasket is compressed it will cause the gripper ring to distort the pipe giving the fitting a high resistance to pull out. The gripper band shall overlap itself to prevent cold flow of the gasket into the cavity under the band.

(c) When compression fittings are used with P.E. Pipe, Stainless Steel pipe stiffeners are required to eliminate cold flow of plastic pipe.

(d) All fittings are to be for CTS Polyethylene pipe.

(e) The Minimum pull out load for the fitting when used with PE plastic pipe shall be as follows for each given size:

SIZE	MINIMUM PULL OUT (FT.LBS.)
¾”	400
1”	400
1 1/2”	500
2"	500

MUELLER 110 COMPRESSION COUPLINGS AND FITTINGS OR EQUIVALENT ARE TO BE USED ON ALL P.E. PLASTIC PIPE INSTALLATIONS.

Sub-section D. Service Fittings:

All service fittings shall be brass tees, and brass ells or equivalent.

Sub-section E. Mark II Ori-Seal Valve:

These valves shall be closed bottom design and sealed against external leakage at the top by means of a non-adjustable resilient pressure actuated seal, and shall be provided with a secondary resilient seal disposed above the pressure seal for added protection of the bearing surfaces against ground water infiltration. Shutoff shall be affected by a resilient pressure actuated seal so disposed in the key (or plug) as to completely enclose the inlet body port (flow way), in the closed position. All Curb valves shall be quarter turn valves and the fully open and closed positions shall be controlled by check lugs that are integral parts of the key and body. The maximum pressure rating shall be 165-PSI water at a maximum temperature of 180 degrees Fahrenheit.

All fittings are to be CTS Size, used on CTS (Copper Tube Size) Polyethylene pipe. No IPS polyethylene pipe or fittings are to be used.

Curb stop valves shall be MUELLER H-1512-2, 110 COMPRESSION by FIP thread.

Sub-section F. Service Box:

Service box shall be a metal box with a lid saying “Irrigation”. Service Box shall be installed over the Ori-Seal valve and hose bib. A sign shall be attached or embossed to or on the cover indicating as follows: "IRRIGATION" or “WATER.” Box shall be D&L Suply M9150 or Tyler Union 6500 or equal utility box.

Sub-section G. Service Pipe Installation:

The copper service pipe shall be installed by use of a boring method that is approved by the Public Works Director/Engineer under all existing concrete and paved surfaces. Where subsurface materials or conditions will not permit installation by this method, open trenching will be permitted with the approval of the Public Works Representative/Engineer. Open trenching will be used in new streets not yet paved.

Section 3A.06 TESTING AND FLUSHING:

All newly laid pipes or any valved section thereof shall be subjected to a hydrostatic pressure test. A leakage test shall be conducted concurrently with the pressure test. All new lines, and extensions therefrom, shall be flushed thoroughly before being placed into service.

Sub-section A. <u>Pressure Test:</u>

If the pipe section being tested includes concrete thrust blocking, the concrete shall be allowed at least twenty-four (24) hours to set before any testing is conducted.

1. Test Pressure Restrictions:

Test pressures shall:

a) Be at least 1.5 times the working pressure at the highest point along the test section, but not less than 150 psi.

b) Not exceed the pressure rating of the pipe.

c) Be of at least 2 hour duration.

d) Not vary by more than plus or minus five ($\pm$ 5) psi for the duration of the test.

e) Not exceed twice the rated pressure of the valves or hydrants when the pressure boundary of the test section includes closed gate valves or hydrants.

f) Not exceed the rated pressure of the valves when the test boundary of the test section includes closed, resilient-seated gate valves or butterfly valves.

2. Pressurization:

Each valved section of pipe shall be filled slowly with water to the specified test pressure. Pressurization of the pipe shall be based on the elevation of the lowest point of the line or section under test and corrected to the elevation of the test gage. Pressure shall be applied by means of a pump connected to the pipe in a manner satisfactory to the Public Works Representative/Engineer.

3. Air Removal:

Before applying the specified test pressure, air shall be expelled completely from the pipe, valves, and hydrants. If permanent air vents are not located at all high points, the Developer/Contractor shall install corporation cocks at such points so that the air can be expelled as the line is filled with water. After all the air has been expelled, the corporation cocks shall be closed and the test pressure applied. At the conclusion of the pressure test, the corporation cocks shall be removed and plugged.

4. Examination:

All exposed pipe, fittings, valves, hydrants, and joints shall be examined carefully during the test. Any damaged or defective pipe, fittings, valves, or hydrants that are discovered during the pressure test shall be repaired or replaced with sound materials and the test shall be repeated. Repairs or replacements to the pipeline and subsequent pressure testing shall be repeated as necessary for the pipeline to pass the pressure test.

Sub-section B. <u>Leakage Test:</u>

A leakage test shall be conducted concurrently with the pressure test.

1. Leakage defined:

Leakage shall be defined as the quantity of water that must be supplied into the newly laid pipe, or any valved section thereof, to maintain pressure within 5 psi of the specified test pressure after the air in the pipeline has been expelled and the pipe has been filled with water.

2. Allowable leakage:

No pipe installation will be accepted if the leakage is greater than that determined by the following formula:

$$L = \frac{SD(P)^{0.5}}{133{,}200}$$

in which L is the allowable leakage, in gallons per hour; S is the length of pipeline tested in feet; D is the nominal diameter of the pipe, in inches; and P is the average test pressure (gage) during the leakage test, in pounds per square inch. See Table 1.

a) Allowable leakage at various pressures is shown in Table 1.

b) When testing against closed metal-seated valves, an additional leakage per closed valve of 0.0078 gal/hr/in. of nominal valve size shall be allowed.

c) When hydrants are in the test section, the test shall be made against the closed hydrant.

TABLE 1: Allowable Leakage per 1000 ft of Pipeline - gph

Avg. Test Pressure *psi (Bar)*	Nominal Pipe Diameter—*in.*															
	3	4	6	8	10	12	14	16	18	20	24	30	36	42	48	54
450 (31)	0.48	0.64	0.95	1.27	1.59	1.91	2.23	2.55	2.87	3.18	3.82	4.78	5.73	6.69	7.64	8.60
400 (28)	0.45	0.60	0.90	1.20	1.50	1.80	2.10	2.40	2.70	3.00	3.60	4.50	5.41	6.31	7.21	8.11
350 (24)	0.42	0.56	0.84	1.12	1.40	1.69	1.97	2.25	2.53	2.81	3.37	4.21	5.06	5.90	6.74	7.58
300 (21)	0.39	0.52	0.78	1.04	1.30	1.56	1.82	2.08	2.34	2.60	3.12	3.90	4.68	5.46	6.24	7.02
275 (19)	0.37	0.50	0.75	1.00	1.24	1.49	1.74	1.99	2.24	2.49	2.99	3.73	4.48	5.23	5.98	6.72
250 (17)	0.36	0.47	0.71	0.95	1.19	1.42	1.66	1.90	2.14	2.37	2.85	3.56	4.27	4.99	5.70	6.41
225 (16)	0.34	0.45	0.68	0.90	1.13	1.35	1.58	1.80	2.03	2.25	2.70	3.38	4.05	4.73	5.41	6.03
200 (14)	0.32	0.43	0.64	0.85	1.06	1.28	1.48	1.70	1.91	2.12	2.55	3.19	3.82	4.46	5.09	5.73
175 (12)	0.30	0.40	0.59	0.80	0.99	1.19	1.39	1.59	1.79	1.98	2.38	2.98	3.58	4.17	4.77	5.36
150 (10)	0.28	0.37	0.55	0.74	0.92	1.10	1.29	1.47	1.66	1.84	2.21	2.76	3.31	3.86	4.41	4.97
125 (9)	0.25	0.34	0.50	0.67	0.84	1.01	1.18	1.34	1.51	1.68	2.01	2.52	3.02	3.53	4.03	4.53
100 (7)	0.23	0.30	0.45	0.60	0.75	0.90	1.05	1.20	1.35	1.50	1.80	2.25	2.70	3.15	3.60	4.05

*If the pipeline under test contains sections of various diameters, the allowable leakage will be the sum of the computed leakage for each size.
**To obtain leakage in liters/hour, multiply the values in the table by 3.785.

3. Examination:

All exposed pipe, fittings, valves, hydrants, and joints shall be examined carefully during the test. Any damaged or defective pipe, fittings, valves, or hydrants that are discovered during the leakage test shall be repaired or replaced with sound materials and the test shall be repeated. Repairs or replacements to the pipeline and subsequent leakage testing shall be repeated as necessary for the pipeline to pass the leakage test.

Sub-section C. Acceptance of Installation:

Acceptance shall be determined on the basis of allowable leakage. If any test of pipe laid discloses leakage greater than specified, the Developer/Contractor shall, at its own expense, locate and repair the defective material until the leakage is within the specified allowance. All visible leaks are to be repaired regardless of the amount of leakage.

Sub-section D. Flushing:

Flushing shall be accomplished through temporary flushing valves, or end of line blow-off assemblies at a minimum flushing velocity of two and one-half feet per second (2.5 fps). Flow volumes to produce this velocity are shown in the following chart:

FLOW RATE AND OPENINGS TO FLUSH PIPELINES
(40 psi Residual Pressure)

Pipe Size (inches)	Flow Required to Produce 2.5 fps velocity (gpm)
2	26
4	100
6	220
8	390
10	610
12	880
14	1,200
16	1,565
18	1,980
20	2,450
24	3,525
30	5,507
42	10,800
48	14,100

Section 3A.07 PRESSURE IRRIGATION DRAINS:

When system drains are necessary to be installed on extensions of the pressure irrigation system they shall be constructed as a system drain to a curb inlet box or system drain to a storm drain pipe**.** The drain shall be constructed as shown on the Standard Drawings. The materials used shall meet the requirements of Division 3A, Pressure Pipe Pressure Irrigation. The connection to the box or pipe shall be by coring a hole and grouting the drainpipe in. A non-shrink grout shall be used.

When a section of pressure irrigation pipeline has to be laid such that there is a belly in it then a local drain sump will need to be constructed. The drain shall be constructed as shown on the Standard Drawings. The materials used shall meet the requirements of Division 3A, Pressure Pipe Pressure Irrigation, Division 4, Concrete Pipe, and Division 5, Manholes.

DIVISION 4: CONCRETE PIPE

Section 4.01 GENERAL:

This section covers the requirements for concrete pipe materials and installation in storm drain, and other gravity line construction.

Section 4.02 PIPE:

Concrete pipe used in sewer line, storm drain line and other gravity line construction shall be reinforced concrete pipe or non-reinforced concrete pipe, as required by design loading and fill heights and as follows:

Sub-section A. Reinforced Concrete Pipe:

All reinforced concrete pipe used in the construction shall be of the rubber gasket type, bell and spigot joint design. Reinforced concrete land drain pipe shall conform to the requirements for "Reinforced Concrete Pipe: ASTM Designation C 75556. Cement used in the pipe shall conform to Type 11A, (the air entraining agent shall be inter-ground at the mill), low alkali cement, conforming to Federal Specifications, 192a, of ASTM Designation C-15C-53. Pipe class shall be as shown on the Drawings. The minimum joint length of all pipes provided shall be 7 1/2 feet. All pipe 12-inch diameter and larger shall be reinforced concrete.

Sub-section B. Non-Reinforced Concrete Pipe:

Non-reinforced concrete land drain pipe shall conform to Concrete Pipe ASTM Designation C 14.

Sub-section C. Bell and Spigot Joints:

Pipe for rubber gasket joints shall be of the bell and spigot type conforming to the requirements of the latest revision of ASTM Designation C-44. A detail of the type the contractor proposes to use shall be furnished and must have the approval of the City Engineer before the work is to be commenced. The joint shall be so designed as to provide for self-centering and when assembled, to compress the gasket to form a water tight seal. The pipe design and gasket shall be such that movement of the pipe or hydrostatic pressure cannot displace the gasket. In order to assure water-tightness the clearance between the inner surface of the bell and the outer surface of the spigot, as well as the dimensional tolerances of this annular space, shall be such that the gasket residual deformation is neither less than 20% nor more than 45% when the spigot is seated to the full depth of the bell socket.

The rubber gasket for use on pipe shall be cured in such a manner that any cross section will be dense, homogeneous, and free from porosity and other imperfections. The gasket shall be extruded or molded to the specific size within a tolerance of plus or minus 1/32 of an inch at any cross section of the gasket. The gasket shall be fabricated from a high-grade tread-type compound. The basic polymer shall be natural rubber, or a copolymer of butadiene-styrene synthetic. The compound shall contain no factice and shall have the following characteristics:

Tensile strength, pounds per square inch, minimum	2,300
Elongation at break, percent, minimum	425
Shore Durometer (Type A)	40-60
Absorption of Waster, by weight, 2 days at 70 degree C, percent maximum	5
Compression set (constant deflection), percent of original, deflection, maximum	20
Tensile strength after oxygen bomb aging (48 hours, 158 degrees F, 300 per square inch), percent of tensile strength before aging, minimum	80
Increase in Shore durometer hardness after oxygen bomb , maximum increase over original Shore Duromoter aging	8
Acetone, extract, percent, maximum	15

The physical properties of the rubber compound shall be determined by tests performed in accordance with appropriate section of Federal Specifications ZZ-R-601a, except for Shore Durometer and compression set. All tests for compression set shall be made in accordance with method B, ASTM Designation D395 for compression set of vulcanized rubber under constant deflection. Tests for Shore Durometer shall be made in accordance with ASTM Designation D767. The contractor shall furnish certified copies of test reports as evidence of the rubber compound used in all rubber gaskets before any gaskets are used to join pipes. All rubber shall be stored in as cool a place as practicable, preferably at 70 degrees or less, and in no case shall the rubber for joints be stored exposed to the direct rays of the sun. All rubber gaskets shall be stored so as to permit free circulation of air about the rubber.

In all cases during the laying of the pipe extreme care must be taken to ensure that the rubber gaskets are properly fitted in place and continually free from twisting and unusual displacement.

Sub-section D. <u>Minimum Size and Slope Requirements:</u>

In no case shall storm sewer mains be less than fifteen (15) inches in diameter. Storm sewer drains shall be laid with uniform slope between manholes. All Storm sewer drains shall be designed and constructed to give mean velocities of not less than 2 feet per second when flowing full, based on Manning's formula using an n value of 0.013.

Whenever possible the slope should exceed 0.005ft/ft (0.5%). The pipe should be sized to meet anticipated hydraulic loads, increasing the pipe size to reduce the minimum slope requirements shall not be allowed. Storm sewer slopes shall not exceed 0.12 ft/ft (12%). Drop manholes shall be used when steeper slopes are needed, drop manholes shall be used to keep line grade below maximum grade allowed. Any exceptions shall be approved by Public Works/ Engineer.

Section 4.03 PIPE LAYING:

No pipe shall be laid under any circumstances until the pipe has been tested, and the samples selected have satisfactorily passed the requirements. All concrete pipe installation shall proceed upgrade with the bell end of the pipe upgrade on a stable foundation, with joints closely and accurately fitted. Rubber gaskets shall be fitted properly in place, and care shall be taken in joining the pipe units to avoid twisting of gaskets. Joints shall be clean and dry, and a joint lubricant as recommended by the pipe supplier shall be applied uniformly to the mating joint surfaces to facilitate easy positive joint closure.

A shallow excavation shall be made underneath the pipe at the joint, this space to be filled with mortar, into which the end of the second pipe beds when laid. The groove end of the first pipe must be thoroughly cleaned with a wet brush and a layer of soft mortar applied to the inside of the groove. The tongue end of the second pipe must be thoroughly cleaned with a wet brush and while in a horizontal position a layer of soft mortar is then inserted into the groove end of the first pipe until the mortar is squeezed out on the interior and exterior surfaces. The interior surface of the pipe joint over 18 inches in diameter shall be brushed smooth and under 18 inches in diameter wiped smooth.

Pipe shall be installed with uniform bearing under the full length of the barrel, with suitable excavations being made to receive pipe bells.

Select material shall be compacted around the pipe to firmly bed the pipe in position. All adjustments to grade shall be made by scraping away or tamping earth under the pipe. Wedging or blocking under the hub will not be permitted. If adjustment of position of a pipe length is required after being laid, it shall be removed and re-jointed as for a new pipe. When laying is not in progress, the ends of the pipe shall be closed with a tight-fitting stopper to prevent the entrance of foreign material.

In addition to the above requirements, all pipe installation shall comply with the specific requirements of the pipe manufacturer.

Section 4.04 GRAVEL FOUNDATION FOR PIPE:

Wherever the subgrade material does not afford a sufficiently solid foundation to support the pipe and superimposed load, or where groundwater must be drained, the subgrade shall be excavated to such depth as may be necessary and replaced with crushed rock or gravel compacted into place. Gravel for concrete pipe foundation shall be clean crushed rock or gravel with one hundred percent (100%) passing a one-inch (1") screen and five percent (5%) passing a No. 4 sieve.

Section 4.05 INSTALLATION REQUIREMENTS FOR LINE AND GRADE:

All concrete pipe shall be installed accurately to the defined line and grade with the following limits:

Variance from established line and grade shall not be greater than one-sixteenth (1/16) inch per inch of pipe diameter in ten feet, and not to exceed one-half inch in ten feet, provided that such variation does not result in a level or reverse sloping invert; provided also that variation in the invert elevation between adjoining ends of pipe, due to non-concentricity of joining surface and pipe interior surfaces, does not exceed one-sixty-fourth (1/64) inch per inch of pipe diameter, or one-half (1/2) inch maximum.

Section 4.06 PIPE BEDDING:

All pipes shall be protected from lateral displacement and possible damage resulting from impact or unbalanced loading during backfilling operations by being adequately bedded.

A groove shall be excavated in the bottom of the trench to receive the bottom quadrant of the pipe. Before preparing the groove, the trench bottom shall be excavated or filled and compacted to an elevation sufficiently above the grade of the pipe so that, when completed, the pipe will be true to line and grade. Bell holes shall be excavated so that only the barrel of the pipe receives bearing from the trench bottom.

Pipe bedding materials placed at any point below the mid-point of the pipe shall be deposited and compacted in layers not to exceed ten-inches (10") in uncompacted depth. Deposition and compaction of bedding materials shall be done simultaneously and uniformly on both sides of the pipe. Compaction shall be accomplished with hand or mechanical compactors. All bedding materials shall be placed in the trench in such a manner that they will be scattered alongside the pipe and not dropped into the trench in compact masses. Bedding materials shall be loose earth, free from lumps; sand or gravel, free from rocks larger than two-inch (2") diameter. All materials shall be free from roots, sod, or other vegetable matter.

In the event trench materials are not satisfactory for pipe bedding, modified bedding will be required. Modified bedding shall consist of placing compacted granular material on each side of and to the level of twelve-inches (12") above the top of the pipe.

Modified bedding material shall be graded as follows: One-hundred percent (100%) passing a one and one-half inch (1-1/2") screen and five percent (5%) passing a No. 4 sieve. Pea gravel is not allowed in any part of the trench.

Section 4.07 BACKFILL:

Sub-section A. <u>Granular Fill:</u>

Limit maximum particle size to 6 inches. Place fill per APWA Section 33 05 20. Compact to a modified proctor density of 95 percent or greater. Maximum lift thickness is 8 inches before compaction. Do not use clay without ENGINEER's review and acceptance. Water jetting is NOT allowed in backfilling operation.

Sub-section B. <u>Flowable Fill:</u>

Where required by city, or state agency, provide and place controlled low strength material per APWA Section 31 05 15. Cure the fill before placing surface restorations.

Sub-section C. Landscape Restoration:

Provide landscaped surfaces with topsoil. Rake to match existing grade. Replace vegetation to match pre-construction conditions. See APWA Section 32 92 00 or APWA Section 32 93 13 requirements.

Sub-section D. Pavement Restoration:

Do not install asphalt or concrete surfacing until trench compaction is accepted by Engineer.

Sub-section E. Pea Gravel:

Pea gravel is not allowed in any part of the trench.

Section 4.08 TESTS:

Random samples of pipe and all fittings and specials such as short radius bands, wyes, and tees shall be tested as specified for the type of pipe being used.

The Developer/Contractor will be required to conduct an air test or infiltration test and displacement test in the presence of the Public Works Director/Engineer or his representative. Camera all mains giving a video copy to the Public Works Representative/Engineer. If these tests prove to be inconclusive, any or all of the other required tests shall be conducted in the presence of the Public Works Director/Engineer or his representative. Tests shall be performed as follows:

Sub-section A. Displacement Test:

In conducting the displacement test a light will be flashed between manholes or, if the manholes have not as yet been constructed, between the locations of the manholes, by means of a flashlight or by reflecting sunlight with a mirror. If the illuminated interior of the pipe shows broken, misaligned or displaced pipe or other defects, the defects designated by the Public Works Director/ Engineer shall be remedied at the Developer/Contractor's expense.

Sub-section B. Infiltration Test:

The Developer/Contractor shall furnish labor, equipment, and materials, including pumps, and shall perform the infiltration tests of the completed line in the presence of the Public Works Director/Engineer before it can be placed into service. The Developer/Contractor shall furnish and install the measuring weirs or other measuring devices. The length of line to be tested at any time shall be subject to the approval of the Public Works Representative/Engineer. The maximum allowable infiltration shall not exceed two-hundred- (200) gallons per inch diameter per mile per twenty-four hours (24 hrs.) for all installed pipe. If the quantity of infiltration is in excess of the maximum allowable, the leaking joints shall be repaired to the satisfaction of the Public Works Director/Engineer at the expense of the Developer/Contractor.

Sub-section C. Exfiltration Test:

The Developer/Contractor shall furnish labor, equipment, and materials, including pumps, and shall perform the ex-filtration tests of the completed line in the presence of the Public Works Director/Engineer before it can be placed into service. The length of line to be tested at one time shall be limited to the length between adjacent manholes. The maximum allowable ex-filtration shall not exceed two-hundred (200) gallons per inch diameter per mile per 24 hours for all installed pipe. The end of the line which projects into the manhole shall be plugged. The pipe shall then be filled with water from the upper manhole, and the line maintained under a light pressure of four feet (4') of head. The inflow of water necessary to maintain this head shall be recorded as the leakage of the system. If the quantity of ex-filtration is in excess of the maximum

allowable, the leaking joints shall be repaired to the satisfaction of the Public Works Director/Engineer at the expense of the Developer/Contractor.

Sub-section D. <u>T V Inspection:</u>

The Developer/Contractor shall furnish labor, equipment, and materials, including pumps, etc. and shall assist Public Works Director/Engineer in making a TV inspection of mains. The line shall be filled with sufficient water to fill any low spots or "bellies" to establish low flow line. A color, sewer type "TV" camera will then be used to inspect and record the condition of the entire installation. A video recording and written log of this inspection shall then be given to the Public Works Director/Engineer at the conclusion of the inspection. This video recording shall be a continuous run and free from pauses and/or editing. It shall contain a reference to the line being inspected, it shall also include the date of inspection and a running footage of the line. The written log shall contain the following information; name, address, phone numbers of contractor performing the inspection, the name of the person performing inspection, the date and time of inspection, the line being inspected, footages and a description of any laterals, "bellies", low spots, debris, defects, damage, roots, imperfections, or other findings. This inspection shall be done with the Public Works Director/Engineer present. No inspection, or record thereof, will be accepted without the Public Works Director/Engineer present during inspection. The contractor/sub-contractor performing the inspection shall be subject to acceptance by the Public Works Representative/ Engineer. Any problems that are found shall be repaired/corrected and re-inspected at the expense of the Contractor/Developer, to the satisfaction of the Public Works Representative/Engineer, before line can be placed in service.

Section 4.09 MANHOLE CONNECTIONS:

Concrete pipe connections to manholes shall be achieved by use of manhole coupling adapters, rubber gaskets, positive seal gasket system with 300 series nonmagnetic corrosion-resistant steel bands, or grouting a bell or spigot pipe at the appropriate locations. Connections shall meet the requirements of Division 5 MANHOLES.

Sub-section A. <u>Connection to Main</u>:

Connections to a Storm Drain system shall be done through either adding a new manhole or connecting to an existing manhole. Any connection to an existing manhole shall not have flow that will exceed the capacity of the existing system. Connections shall be made as shown on the Standard Drawing and at the location specified herein, shown on the improvement drawings or as staked in the field.

Sub-section B. <u>Damage and Repair of Mains and Appurtenances:</u>

The Developer/Contractor shall be responsible for the protection of existing improvements, and any damage resulting from its operations shall be its sole responsibility. Damage to the mains, laterals, or appurtenances shall be repaired by acceptable and approved methods.

DIVISION 4A: PVC PLASTIC PIPE

Section 4A.01 GENERAL:

This section covers the requirements for PVC plastic sewer pipe materials and installation in sanitary sewer, land drain, and other gravity line construction.

All materials shall be new and shall be protected from any long exposure to the sun. The pipe shall be as uniform as commercially practical in color, density, and other physical properties.

Sub-section A. Certification

When agreed upon in writing by the purchaser and the seller the certification shall be made the basis of the acceptance of the material. This shall consist of a copy of the manufacturers test report or a statement by the seller, accompanied by a copy of the test results, that the material has been sampled, tested, and inspected in accordance with the provisions of the specification. Each certification so furnished shall be signed by an authorized agent of the seller or manufacturer. Copies will be furnished to the City.

Sub-section B. Marking

Pipes in compliance with this standard shall be clearly marked at intervals of five feet (5 ft) or less. The marking on SDR-35 shall be: (1) Mfg's Quality; (2) Nominal Pipe Size; (3) PVC 12454-B; (4) SDR-(number); (5) PSP Sewer Pipe; (6) Appropriate ASTM Number; (7) Extrusion Code

Section 4A.02 PIPE:

PVC gravity pipe and fittings shall conform to ASTM D-3034, for diameters from four-inch (4") to fifteen-inch (15") and ASTM F-679 for eighteen-inch (18") to twenty-seven-inch (27"), with integral bell gasket joints. Rubber gaskets shall be factory installed and conform to ASTM F-477. Pipe shall be made of PVC plastic having a cell classification of 12454A or 13364B (with minimum tensile modulus of 500,000 PSI) as defined in ASTM D-1784 and shall have a SDR of 35 and minimum pipe stiffness of 46PSI according to ASTM test D-2412. Pipe shall be installed in compliance with ASTM D-2321 and the manufacturer's requirements

Sub-section A. Minimum Size and Slope Requirements:

In no case shall mains be less than eight inches in diameter. Sewers shall be laid with uniform slope between manholes. All sewers shall be designed and constructed to give mean velocities of not less than 2 feet per second when flowing full, based on Manning's formula using an n value of .013. Absolute minimum slope allowed shall be those published by the Utah Department of Environmental Quality, Division of Water Quality as Administrative Rules for Design Requirements for Wastewater Collection, Treatment and Disposal System, R317-3, **Table R317-3-2.3 (D)(4) Minimum Slopes**.

Whenever possible the slope should exceed 0.005 ft/ft (0.5%). The pipe should be sized to meet anticipated hydraulic loads, increasing the pipe size to reduce the minimum slope requirements shall not be allowed. Sewers on slope 3:1 (33.3%) or steeper shall be anchored immediately downstream from bells with concrete anchors or approved equal as follows:

A. Not over 24 feet center-to center on slopes 3:1 to 2:1 (33.3% to 50%.)
B. Not over 16 feet center-to-center on slopes steeper than 2:1 (50%.)

All sewer lateral piping shall be identified as green in color and all land drain laterals shall be identified as white in color.

Section 4A.03 FITTINGS:

Fittings shall be made of PVC plastic conforming to ASTM D-1784 and a cell classification as outlined in ASTM D-3034.

Section 4A.04 PIPE LAYING:

All pipe installation shall proceed upgrade with bell end of pipe upgrade on a stable foundation, with joints closely and accurately fitted. Joints shall be clean and dry, and a joint lubricant as recommended by the pipe supplier shall be applied uniformly to the mating joint surfaces to facilitate easy positive joint closure.

Pipe shall be installed with uniform bearing under the full length of the barrel, with suitable excavations being made to receive pipe bells.

Select material (1" drain rock) shall be compacted around the pipe to firmly bed the pipe in position. Haunching material (bed to springline) should be carefully worked under the haunches of the pipe and compacted from the pipe to the trench wall or two and one half (2-1/2) pipe diameters on each side of the pipe to ensure support. If adjustment of position of a pipe length is required after being laid, it shall be removed and re-jointed as for a new pipe. When pipe laying is not in progress, the ends of the pipe shall be closed with a tight-fitting stopper to prevent the entrance of foreign material. In addition to the above requirements, all pipe installation shall rigidly adhere to the specific requirements of the pipe manufacturer.

Section 4A.05 GRAVEL FOUNDATION FOR PIPE:

Wherever the subgrade material does not afford a sufficiently solid foundation to support the pipe and superimposed load, and where groundwater must be drained, the subgrade shall be excavated to such depth as may be necessary and replaced with crushed rock or gravel compacted into place. Gravel for PVC pipe foundation shall be clean crushed rock or gravel with one hundred percent (100%) passing a one-inch (1") screen and less than five percent (5%) passing a No. 4 sieve.

Section 4A.06 INSTALLATION REQUIREMENTS FOR LINE AND GRADE:

All PVC pipe shall be installed accurately to the defined line and grade with the following limits:

> Variance from established line and grade shall not be greater than one-sixteenth (1/16) inch per inch of pipe diameter in ten feet, and not to exceed one-half inch in ten feet, provided that such variation does not result in a level or reverse sloping invert; provided also that variation in the invert elevation between adjoining ends of pipe, due to non-concentricity of joining surface and pipe interior surfaces, does not exceed one-sixty-fourth (1/64) inch per inch of pipe diameter, or one-half (1/2) inch maximum.

Section 4A.07 PIPE BEDDING:

All mains and drains shall be protected from lateral displacement and possible damage resulting from impact or unbalanced loading during backfilling operations by being adequately bedded.

A groove shall be excavated in the bottom of the trench to receive the bottom quadrant of the pipe. Before preparing the groove, the trench bottom shall be excavated or filled and compacted to an elevation sufficiently above the grade of the pipe so that, when completed, the pipe will be true to line and grade. Bell holes shall be excavated so that only the barrel of the pipe receives bearing from the trench bottom.

Pipe bedding materials placed at any point below the mid-point of the pipe shall be deposited and compacted in layers not to exceed ten-inches (10") in uncompacted depth. Deposition and compaction of bedding materials shall be done simultaneously and uniformly on both sides of the pipe. Compaction shall be accomplished with hand or mechanical compactors. All bedding materials shall be placed in the trench with hand tools or other approved method in such a manner that they will be scattered alongside the pipe and not dropped into the trench in compact

masses. Bedding materials shall be loose earth, free from lumps; sand or gravel, free from rocks larger than one-inch (1") diameter; with all materials free from roots, sod, or other vegetable matter.

In the event trench materials are not satisfactory for pipe bedding, modified bedding will be required. Modified bedding shall consist of placing compacted granular material on each side of and to the level of twelve-inches (12") above the top of the pipe.

Modified bedding material shall be graded as follows: One-hundred percent (100%) passing a one and one-half inch (1-1/2") screen and five percent (5%) passing a No. 4 sieve.

Section 4A.08 TESTS:

The Developer/Contractor will be required to conduct an air test, displacement test or TV inspection as per subsection E "TV Inspection" in previous section, in the presence of the Public Works Director/Engineer or his representative. If these tests prove to be inconclusive, any or all of the other required tests shall be conducted in the presence of the Public Works Director/Engineer or his representative. All mains will be camera inspected and videotaped. A copy being given to the Public Works Director. Tests shall be performed as follows:

Sub-section A. <u>Displacement Test:</u>

In conducting the displacement test a light will be flashed between manholes or, if the manholes have not as yet been constructed, between the locations of the manholes, by means of a flashlight or by reflecting sunlight with a mirror. If the illuminated interior of the pipe shows broken, misaligned or displaced pipe or other defects, the defects designated by the Public Works Director/Engineer shall be remedied at the Developer/Contractor's expense.

Sub-section B. <u>Infiltration Test:</u>

The Developer/Contractor shall furnish labor, equipment, and materials, including pumps, and shall perform the infiltration tests of the completed line in the presence of the Public Works Director/Engineer before it can be placed into service. The Developer/Contractor shall furnish and install the measuring weirs or other measuring devices. The length of line to be tested at any time shall be subject to the approval of the Public Works Representative/Engineer. The maximum allowable infiltration shall not exceed two-hundred (200) gallons per inch diameter per mile per twenty-four hours (24 hrs) for all installed pipe. If the quantity of infiltration is in excess of the maximum allowable, the leaking joints shall be repaired to the satisfaction of the Public Works Director/Engineer at the expense of the Developer/Contractor.

Sub-section C. <u>Exfiltration Test:</u>

The Developer/Contractor shall furnish labor, equipment, and materials, including pumps, and shall perform the exfiltration tests of the completed line in the presence of the Public Works Director/Engineer before it can be placed into service. The length of line to be tested at one time shall be limited to the length between adjacent manholes. The maximum allowable exfiltration shall not exceed two-hundred (200) gallons per inch diameter per mile per 24 hours for all installed sewer pipe. The end of the sewer line which projects into the manhole shall be plugged. The pipe shall then be filled with water from the upper manhole, and the line maintained under a light pressure of four feet (4') of head. The inflow of water necessary to maintain this head shall be recorded as the leakage of the system. If the quantity of exfiltration is in excess of the maximum allowable, the leaking joints shall be repaired to the satisfaction of the Public Works Director/Engineer at the expense of the Developer/Contractor.

Sub-section D. <u>Air Testing:</u>

The Developer/Contractor or his representative (a qualified firm or individual agreed upon by the Public Works Director/Engineer and the Developer/Contractor) shall furnish labor, equipment, and materials, including pumps and compressors, and shall perform, in the presence of the Public Works Representative/Engineer, air tests of the completed pipe before it can be placed in service. Each section of

sanitary sewer pipeline between manholes shall be tested after all the service laterals (and plugs) have been installed. Each test section shall be pressurized to a uniform gauge pressure of five (5) pounds per square inch (34.5kPa) or sufficient to balance a column of mercury ten (10 inches (254 mm) in height. The pressure shall be held without introducing additional air for a period of at least fifteen minutes. Failure of the Developer/Contractor's testing equipment to properly function shall render the test unacceptable. All faulty sections of pipeline shall be repaired and re-tested until the minimum air testing requirements have been met.

Sub-section E. T V Inspection:

The Developer/Contractor shall furnish labor, equipment, and materials, including pumps, etc. and shall assist Public Works Director/Engineer in making a TV inspection of mains. The line shall be filled with sufficient water to fill any low spots or "bellies" to establish low flow line. A color, sewer type "TV" camera will then be used to inspect and record the condition of the entire installation. A video recording and written log of this inspection shall then be given to the Public Works Director/Engineer at the conclusion of the inspection. This video recording shall be a continuous run and free from pauses and/or editing. It shall contain a reference to the line being inspected, it shall also include the date of inspection and a running footage of the line. The written log shall contain the following information; name, address, phone numbers of contractor performing the inspection, the name of the person performing inspection, the date and time of inspection, the line being inspected, footages and a description of any laterals, "bellies", low spots, debris, defects, damage, roots, imperfections, or other findings. This inspection shall be done with the Public Works Director/Engineer present. No inspection, or record thereof, will be accepted without the Public Works Director/Engineer present during inspection. The contractor/sub-contractor performing the inspection shall be subject to acceptance by the Public Works Representative/Engineer. Any problems that are found shall be repaired/corrected and re-inspected at the expense of the Contractor/ Developer, to the satisfaction of the Public Works Representative/Engineer, before line can be placed in service.

Section 4A.09 MANHOLE CONNECTIONS:

The maximum distance between manholes shall be 400'. PVC pipe connections to manholes shall be achieved by use of manhole coupling adapters, rubber gaskets, or positive seal gasket system with 300 series nonmagnetic corrosion-resistant steel bands. PVC may not be grouted directly to concrete. Connections shall meet the requirements of Division 5 MANHOLES.

Section 4A.10 SEWER LATERAL CONNECTIONS:

All sewer lateral connections onto new sewer mains shall be made through preformed tee fittings installed in the main line at the time of main line installation.

Connections onto existing sewer mains shall be made with field installed service saddles (gasketed and clamped). All connections by field installed service saddles on existing sewer mains shall be done with a sewer tapping machine and all required fittings and materials. Connections shall be made as shown on the Standard Drawing and at the location specified herein, shown on the improvement drawings or as staked in the field.

Section 4A.11 SEWER SERVICE LATERALS

New service laterals shall be constructed with materials and procedures as specified herein.

Existing service laterals shall be constructed with materials compatible with the existing laterals with appropriate connections for joining the ends of existing laterals. All laterals shall be four-inch (4") in diameter unless shown otherwise. Tracer wire shall be installed above each new service lateral.

Sub-section A. Extent of Laterals and Location of Laterals:

Service laterals shall extend from the sewer main to a point ten-foot (10') beyond the street right-of-way line unless shown or staked otherwise. Service laterals shall also be a minimum of ten feet (10') away from the culinary water service lateral. A two-inch (2") by four-inch (4") by six-foot (6') marker, with the top twelve-inches (12") painted green, shall be installed to clearly mark the end of each lateral line. In addition to the marker, the Developer/Contractor shall station (give a distance) the location of the lateral connection to the main from the nearest downstream manhole. Laterals shall be capped with a cap suitable to withstand test pressure and prevent any leakage into or out of the lateral.

When an existing sewer lateral is encountered along the line and grade of a new pipeline it shall be relocated using appropriate pipe and fittings and graded to insure adequate slope to drain properly. Minimum slope shall be one-quarter-inch (1/4") per foot (2%).

In compliance with Utah Code Title 54, Chapter 8a, the following requirements must be achieved:

1. An excavator must have property owner's permission to access or enter the property or dwelling to locate a sewer lateral.
2. The Sewer cleanout cap must be a material that can be easily located with a metal detector (such as a threaded brass cap). The installation or replacement of a sewer cleanout must be visibly positioned at a minimum of two-inches above grade and must be protected from damage.
3. The location of the sewer lateral and cleanout must be documented in an as-built construction drawing and delivered to the city sewer department manager.

Sub-section B. Excavation and Backfill:

Trench excavation and backfill shall conform to the applicable paragraphs of Division 2 and the bedding requirements of this Division.

Sub-section C. Pipe:

Pipe used for new service laterals shall be PVC Plastic Pipe conforming to ASTM D-3034 SDR 35. All sewer lateral piping shall be identified as green in color and all land drain laterals shall be identified as white in color.

Sub-section D. Connection to Main:

Connections to the main shall be made as specified in Section 4A.10 SEWER LATERAL CONNECTIONS. Recommendations of manufacturer of the materials used shall be carefully followed.

Sub-section E. Cover Over Sewer Lateral Lines:

There shall be a minimum of 3 feet of cover over all sewer lateral lines (3'6" minimum at property line.)

Sub-section F. Sewer Clean Outs:

There shall be a maximum distance of 5 feet from the foundation wall to the first exterior clean out with a maximum distance between clean-outs of one hundred (100) feet. There shall be a clean out when a combination of bends is ninety degree (90°) or greater. Sewer cleanouts shall be easily located after final grade and improvements, i.e. landscaping, etc., are completed.

Sub-section G. Testing:

The service laterals shall be tested as a part of the sewer main to which they are connected.

Sub-section H. <u>Damage and Repairs of Sewers and Appurtenances:</u>

The Developer/Contractor shall be responsible for the protection of existing improvements, and any damage resulting from its operations shall be its sole responsibility.

Damage to the sewers, laterals, or appurtenances shall be repaired by acceptable and approved methods.

DIVISION 4B: POLYETHYLENE CORRUGATED PIPE

Section 4B.01 GENERAL:

This section covers the requirements for high-density polyethylene corrugated pipe with integrally formed smooth interior for use in storm drains and other gravity line construction.

Section 4B.02 PIPE:

This specification is applicable to nominal sizes 12 - 36 inch diameter. Requirements for test methods, dimensions, and markings are those found in AASHTO Designation M-294.

Pipe and fittings shall be made of polyethylene compounds that meet or exceed the requirements of Type III, Category 4 or 5, Grade P33 or P34, Class C per ASTM Designation D-1248 with the applicable requirements defined in ASTM D-1248. Clean reworked material may be used.

Minimum parallel plate pipe stiffness values at 5% deflection shall be as follows:

Diameter	Pipe Stiffness*	
12"	45 psi	
15"	42 psi	
18"	40 psi	
24"	34 psi	
30"	28 psi	*Per ASTM Test
36"	22 psi	Method D-2412

The pipe and fittings shall be free of foreign inclusions and visible defects. The ends of the pipe shall be cut squarely and cleanly so as not to adversely affect joining.

The nominal size for the pipe and fittings is based on the nominal inside diameter of the pipe. Corrugated fittings maybe either molded or fabricated by the manufacturer. Fittings produced by manufacturers other than the supplier of the pipe shall not be permitted without the approval of the Project Public Works Representative/Engineer. A manufacturers' certification that the product was manufactured, tested, and supplied in accordance with this specification shall be furnished to the Project Public Works Director/Engineer upon request.

Pipe installation shall be in accordance with ASTM Recommended Practice D-2321 and the manufacturer's requirements.

Section 4B.03 JOINTS:

Joints shall be made with split couplings, corrugated to match the pipe corrugations, and shall engage a minimum of 6 corrugations for 12" - 24" diameter and 4 corrugations for 30" and 36" diameter pipe.

Section 4B.04 PERFORATIONS:

All perforated pipe used in the construction shall have either circular or slotted perforations. Circular perforations shall not be more that 5/16 in. nor less than 3/16 in. in diameter, and arranged in rows parallel to the axis of the pipe. Perforations shall be 3 in. center-to-center, along rows. The spigot or tongue end shall not be perforated for a length equal to the depth of the socket, or depth of the groove plus 3/4 in. and perforations shall continue at uniform spacing along the entire length of the barrel. There shall be a total of 8 rows for an 18-inch pipe. The rows shall be spaced over not more than 165 degrees of circumference. Rows shall be symmetrically arranged with respect to the intended top of bottom of the pipe.

Slots shall be circumferential in direction, not more than 3/16 in. or less than 1/8 in. in width, and 3 in. long. The slots shall be spaced 6 in. apart. There shall be two rows of slots, spaced 120° apart. The distance from the spigot end, or from the shoulder of the tongue end, to the first pair of slots shall be not more than 1 in. greater than the specified slot spacing, nor less than 1 in. less than the specified slot spacing. Slots shall continue at uniform spacing along the entire length of the barrel.

Section 4B.05 PIPE LAYING:

All pipe installation shall proceed upgrade on a stable foundation, with joints closely and accurately fitted.

Pipe shall be installed with uniform bearing under the full length of the barrel, with suitable excavations being made to receive pipe joints.

Select material shall be compacted around the pipe to firmly bed the pipe in position. Haunching material (bed to springline) should be carefully worked under the haunches of the pipe and compacted from the pipe to the trench wall, or two and one-half (2-1/2) pipe diameters on each side of the pipe, to ensure support. If adjustment of position of a pipe length is required after being laid, it shall be removed and re-jointed as for a new pipe. When pipe laying is not in progress, the ends of the pipe shall be closed with a tight-fitting stopper to prevent the entrance of foreign material.

In addition to the above requirements, all pipe installation shall rigidly adhere to the specific requirements of the pipe manufacturer.

Section 4B.06 GRAVEL FOUNDATION FOR PIPE:

Wherever the subgrade material does not afford a sufficiently solid foundation to support the pipe and superimposed load, and where groundwater must be drained, the subgrade shall be excavated to such depth as may be necessary and replaced with crushed rock or gravel compacted into place.

Gravel for pipe foundation shall be clean crushed rock or gravel with one hundred percent (100%) passing a one-inch (1") screen and less than five percent (5%) passing a No. 4 sieve.

Section 4B.07 INSTALLATION REQUIREMENTS FOR LINE AND GRADE:

All pipe shall be installed accurately to the defined line and grade with the following limits:

> Variance from established line and grade shall not be greater than one-sixteenth (1/16) inch per inch of pipe diameter in ten feet, and not to exceed one-half inch in ten feet, provided that such variation does not result in a level or reverse sloping invert; provided also that variation in the invert elevation between adjoining ends of pipe, due to non-concentricity of joining surface and pipe interior surfaces, does not exceed one-sixty-fourth (1/64) inch per inch of pipe diameter, or one-half (1/2) inch maximum.

Section 4B.08 PIPE BEDDING:

All pipes and drains shall be protected from lateral displacement and possible damage resulting from impact or unbalanced loading during backfilling operations by being adequately bedded.

A groove shall be excavated in the bottom of the trench to receive the bottom quadrant of the pipe. Before preparing the groove, the trench bottom shall be excavated or filled and compacted to an elevation sufficiently above the grade of the pipe so that, when completed, the pipe will be true to line and grade. Joint holes shall be excavated so that only the barrel of the pipe receives bearing from the trench bottom.

Pipe bedding materials placed at any point below the mid-point of the pipe shall be deposited and compacted in layers not to exceed ten-inches (10") in uncompacted depth. Deposition and compaction of bedding materials shall be done simultaneously and uniformly on both sides of the pipe. Compaction shall be accomplished with hand or mechanical compactors. All bedding materials shall be placed in the trench with hand tools or other approved

method in such a manner that they will be scattered alongside the pipe and not dropped into the trench in compact masses. Bedding materials shall be 1" drain rock.

In the event trench materials are not satisfactory for pipe bedding, modified bedding will be required. Modified bedding shall consist of placing compacted granular material on each side of and to the level of twelve-inches (12") above the top of the pipe.

Modified bedding material shall be graded as follows: One-hundred percent (100%) passing a No. 4 sieve and less than five percent (5%) passing a No. 200 sieve.

Section 4B.09 TESTS:

The Developer/Contractor will be required to test in the presence of the Public Works Director/Engineer or his representative. Lines will be required to be videoed and a copy given to the Public Works Director/Engineer. If this test proves to be inconclusive, other required tests shall be conducted in the presence of the Public Works Director/Engineer or his representative. The test shall be performed as follows:

Sub-section A. Displacement Test:

In conducting the displacement test a light will be flashed between manholes or, if the manholes have not as yet been constructed, between the locations of the manholes, by means of a flashlight or by reflecting sunlight with a mirror. If the illuminated interior of the pipe shows broken, misaligned, or displaced pipe or other defects, the defects designated by the Public Works Director/Engineer shall be remedied at the Developer/Contractor's expense.

Sub-section B. Infiltration Test:

The Developer/Contractor shall furnish labor, equipment, and materials, including pumps, and shall perform the infiltration tests of the completed line in the presence of the Public Works Director/Engineer before it can be placed into service. The Developer/Contractor shall furnish and install the measuring weirs or other measuring devices. The length of line to be tested at any time shall be subject to the approval of the Public Works Representative/Engineer. The maximum allowable infiltration shall not exceed two-hundred (200) gallons per inch diameter per mile per twenty-four hours (24 hrs.) for all installed subsurface drain pipe. If the quantity of infiltration is in excess of the maximum allowable, the leaking joints shall be repaired to the satisfaction of the Public Works Director/Engineer at the expense of the Developer/Contractor.

Sub-section C. Exfiltration Test:

The Developer/Contractor shall furnish labor, equipment, and materials, including pumps, and shall perform the exfiltration tests of the completed line in the presence of the Public Works Director/Engineer before it can be placed into service. The length of line to be tested at one time shall be limited to the length between adjacent manholes. The maximum allowable exfiltration shall not exceed two-hundred (200) gallons per inch diameter per mile per 24 hours for all installed sewer pipe. The end of the sewer line which projects into the manhole shall be plugged. The pipe shall then be filled with water from the upper manhole, and the line maintained under a light pressure of four feet (4') of head. The inflow of water necessary to maintain this head shall be recorded as the leakage of the system. If the quantity of exfiltration is in excess of the maximum allowable, the leaking joints shall be repaired to the satisfaction of the Public Works Director/Engineer at the expense of the Developer/Contractor.

Sub-section D. Air Testing:

The Developer/Contractor or his representative (a qualified firm or individual agreed upon by the Public Works Director/Engineer and the Developer/Contractor) shall furnish labor, equipment, and materials, including pumps and compressors, and shall perform, in the presence of the Public Works Representative/Engineer, air tests of the completed pipe before it can be placed in service. Each section of

sanitary sewer pipeline between manholes shall be tested after all the service laterals (and plugs) have been installed. Each test section shall be pressurized to a uniform gauge pressure of five (5) pounds per square inch (34.5kPa) or sufficient to balance a column of mercury ten (10 inches (254 mm) in height. The pressure shall be held without introducing additional air for a period of at least fifteen minutes. Failure of the Developer/Contractor's testing equipment to properly function shall render the test unacceptable. All faulty sections of pipeline shall be repaired and re-tested until the minimum air testing requirements have been met.

Sub-section E. T V Inspection:

The Developer/Contractor shall furnish labor, equipment, and materials, including pumps, etc. and shall assist Public Works Director/Engineer in making a TV inspection of mains. The line shall be filled with sufficient water to fill any low spots or "bellies" to establish low flow line. A color, sewer type "TV" camera will then be used to inspect and record the condition of the entire installation. A video recording and written log of this inspection shall then be given to the Public Works Director/Engineer at the conclusion of the inspection. This video recording shall be a continuous run and free from pauses and/or editing. It shall contain a reference to the line being inspected, it shall also include the date of inspection and a running footage of the line. The written log shall contain the following information; name, address, phone numbers of contractor performing the inspection, the name of the person performing inspection, the date and time of inspection, the line being inspected, footages and a description of any laterals, "bellies", low spots, debris, defects, damage, roots, imperfections, or other findings. This inspection shall be done with the Public Works Director/Engineer present. No inspection, or record thereof, will be accepted without the Public Works Director/Engineer present during inspection. The contractor/sub-contractor performing the inspection shall be subject to acceptance by the Public Works Representative/Engineer. Any problems that are found shall be repaired/corrected and re-inspected at the expense of the Contractor/Developer, to the satisfaction of the Public Works Representative/Engineer, before line can be placed in service.

Section 4B.10 MANHOLE CONNECTIONS:

Corrugated polyethylene pipe connections to manholes shall be achieved by use of manhole coupling adapters, rubber boots with 300 series nonmagnetic corrosion-resistant steel bands, or grouted directly to concrete.

Section 4B.11 LATERAL CONNECTIONS:

All lateral connections into new mains shall be through preformed tee fittings installed in the main line or with field installed service saddles. All connections by field installed service saddles on new or existing sewer mains shall be done in accordance with manufacturer recommendations and with all required fittings and materials. Connections shall be at the locations shown in the Drawings.

Section 4B.12 "GO/NO-GO" MANDREL PROOF TESTING:

Not less than thirty (30) days after installation of the flexible sewer or drain pipe, the City may require that the Developer/Contractor shall test the buried pipe to insure that ring-deflection of the pipe does not exceed five percent (5%) of the pipe's specified minimum inside diameter (ID). This proof test shall establish that the Developer/ Contractor has installed the flexible pipe in full compliance with the Project Specifications thereby providing required pipe/soil structural strength.

The Developer/Contractor, with Inspector present, shall pull a "Go/No-Go" Mandrel, inspected and approved by the Public Works Representative/Engineer, through the full length of installed flexible pipe. The Mandrel shall be fabricated from suitable metal with a minimum of nine (9) properly sized radial fins mounted upon a center pulling shaft. In any case, the Mandrel shall be provided with an odd number of rigidly mounted radial fins. The Mandrel shall be provided with a proof-sizing ring that can demonstrate that the Mandrel's minimum outside diameter (OD) is not less than ninety-five percent (95%) of the specified minimum inside diameter of the installed flexible pipe. The Mandrel shall be pulled by the Developer/Contractor through one hundred percent (100%) of the installed flexible pipe without using mechanical equipment. Failure of the Mandrel to pass through a pipeline shall be

deemed evidence of inadequate installation by the Developer/Contractor not in compliance with the Project Specifications.

The Public Works Director/Engineer may require, if deemed appropriate or necessary, additional proof testing of designated lengths of the buried flexible pipe approximately one year (1 yr.) after installation but prior to the expiration of the Developer/Contractor's Maintenance Bond. The flexible pipeline shall be cleaned adequately prior to performing the "Go/No-Go" Mandrel ring deflection proof test. The Developer/Contractor, with Inspector present, shall pull a Mandrel, approved by the Public Works Representative/Engineer, through the designated length of pipeline without using mechanical equipment. Failure of the Mandrel to pass through the pipeline shall be deemed evidence of inadequate installation by the Developer/Contractor not in compliance with the Project Specifications.

DIVISION 5: MANHOLES

Section 5.01 GENERAL:

This division covers the requirements for manhole materials and installation. Manholes shall be installed at the locations and at the depth shown on the drawings. Manholes shall be furnished complete with cast-iron rings and covers. Distance not to exceed 400' maximum between manholes.

Section 5.02 CONCRETE BASE:

Unless otherwise noted manhole bases shall be precast and shall have pipe inverts and a resilient connection between pipe and manhole for each pipe connecting to the manhole.

Where sewer lines pass through or enter manholes, the invert channels shall be smooth and semi-circular in cross section, conforming to the details shown on the Drawings. Changes of direction of flow within the manholes shall be made with a smooth curve with as long a radius as possible. The floor of the manhole outside the flow channels shall be smooth and slope toward the channel at not less than one-half inch (1/2") per foot.

Concrete pipe connections to manholes shall be achieved by use of manhole coupling adapters, rubber gaskets, positive seal gasket system, or grouting a bell or spigot pipe at the appropriate locations. Rubber gaskets or boots shall be made of rubber compound meeting ASTM C-923 Specifications for resilient connections between pipe and manhole. They shall meet all other applicable ASTM specifications, including ASTM F-477.

Positive seal gasket systems boot shall have a wall thickness of three-eighths inch (3/8"). The boot shall either be "cast-in-place" in the precast base or attached to the precast base by means of an internal expanding band. When the boot is attached to the precast base, a watertight seal between the boot and the precast base must be accomplished. An external band (take-up clamp) shall be supplied and used to clamp and seal the boot to the pipe. The band shall be made of 300 series nonmagnetic corrosion-resistant steel. After the band has been placed, it shall be completely coated with a bituminous material approved by the Public Works Representative/Engineer.

PVC pipe connections to manholes shall be achieved by use of manhole coupling adapters, rubber gaskets, or positive seal gasket system. PVC may not be grouted directly to concrete.

The maximum size pipe that can be used in a 48-inch manhole is twenty-four (24") inch PVC or twenty-one (21") inch concrete. For pipes larger than these require a 60-inch manhole or concrete box.

Concrete for manhole bases shall comply with the requirements of Division 8, Concrete, of these Specifications.

When cast-in-place manholes are authorized, they must be watertight and conform in dimension and design to the standard drawings. Cast-in-place manholes will only be considered on concrete subsurface lines or when connecting to an existing active line. A gasket placed over the outside of the pipe or other means of providing a watertight seal is required.

Section 5.03 WALL AND CONE SECTIONS:

All manholes shall be precast, sectional, reinforced concrete pipe of forty-eight-inch (48") or sixty-inch (60") diameter as specified. Both cylindrical and taper sections shall conform to all requirements of ASTM Designation C-478-88 (or latest revision) for Precast Reinforced Concrete Manhole Sections with the following exceptions:

1.The throat section of the manhole shall be adjustable, by use of manhole sections, up to forty-eight inches (48") in height.

2. The taper section shall be a maximum of thirty-six inches (36") in height for 48-inch manholes and thirty-nine inches (39") for 60-inch manholes, shall be of eccentric conical design, and shall taper uniformly to thirty inches (30") inside diameter.

3. The pipe used in the base section shall be furnished in section lengths of one, two, three, and four-feet (1, 2, 3, and 4 feet) as required.

All joint surfaces of precast sections and the face of the manhole base shall be thoroughly cleaned and wet prior to setting precast sections. All joints, including grade rings, shall be set in mortar or butyl rubber gasket. The mortar shall consist of one (1) part cement and one and one-half (1-1/2) parts sand with sufficient water added to bring the mixture to workable consistency or the joints shall be sealed with a butyl rubber gasket that is permanently flexible and non-shrinking. All joints shall be water tight and free from appreciable irregularities in the interior wall surface.

Sub-section A. Manholes Shall Be Furnished With Steps:

The steps are to be made of co-polymer polypropylene. The co-polymer polypropylene used shall conform to ASTM D-4101-82 PP200B33450Z02. The steel used in manufacturing of this product shall be a deformed 3/4" reinforcing rod. This material shall be grade 60 and conform to the requirements of ASTM A-615. The first step shall be a minimum of 24" from the top of the manhole.

Section 5.04 DROP MANHOLES (By approval of Public Works/Engineer only):

When the difference in elevation of an incoming sewer drain is 12-inches or greater a drop manhole shall be used. The drop manhole shall be constructed as shown in the Standard Drawings. The piping from the wye to the manhole on both legs shall be ductile iron or PVC pipe with appropriate fittings. If the sewer main that the drop manhole is a part of is concrete, then a transition coupling (Fernco) shall be used to connect the main with the drop pipe assembly.

The drop pipe assembly shall be encased in flowable fill. The flowable fill shall be placed to the minimum thickness as shown on the Standard Drawings.

Sub-section A. Cement:

Use Portland Cement, Type II per Division 8, Portland Cement Concrete.

Sub-section B. Fly Ash:

Supply fly ash that complies with ASTM C-618 Class F except that the loss on ignition must be 3 percent or less.

Sub-section C. Fine Aggregate:

Use natural sand. The sand shall meet the following gradation when tested in accordance with AASHTO T-27.

Fine Aggregate

Sieve Size	Percent Passing
No. 3/4	100
No. 100	0-10

Sub-section D. Mix Design:

The mix design shall meet the following requirements:

- Mix design compressive strength (28 day) – between 50 to 150 psi.
- Portland Cement – at least 50 pounds per cubic yard.
- Fly Ash – at least 300 pounds per cubic yard.
- Slump – 6 to 10 inches maximum.

Section 5.05 MANHOLE RINGS AND COVERS:

All iron casting shall conform to the requirements of ASTM Designation A-48 (Class 35) for grey iron castings, free from blowholes and shrinkage defects. Castings shall be free from fins and burrs and shall be shot-blasted to remove sand and other foreign matter.

Rings and covers shall be equal to the twenty-four inch (24") Standard circular, with machined bearing surfaces, gravity, solid, non-rocking type. The minimum weight of the cover shall be one hundred sixty (160) pounds. The minimum weight of the ring shall be two hundred eighty (280 lbs.). Flat rings and covers shall be allowed only when specifically authorized. Vented covers may be specified for certain areas. Use vented covers only when authorized. The tops of the cover and ring shall be flush and there shall be 1/8-inch clearance between the cover and the ring. In addition to the foundry name and year of manufacture, the cover shall be marked "SEWER," “STORM DRAIN,” “LAND DRAIN,” or “IRRIGATION” as appropriate.

Sub-section A. Setting of Manhole Frames and Covers:

Manhole rings shall be set in place in with the shaft in a bed of cement sand mortar, which mix shall be one part cement to two parts sand or Kent Seal. Covers shall be set to the finished grade and contour of the existing street. Rings and covers shall be protected during backfilling and compaction of the soil and during the placing or replacing of road surfaces. Any rings or covers loosened from the manhole sections shall be reset in cement mortar and any rings or covers damaged or broken shall be replace by the Developer/Contractor at its expense. Manholes placed in asphalt surfacing shall be set in a concrete collar. The collar shall be at least twelve inches (12”) thick and extend at least twenty four inches (24”) from the cast iron ring. The concrete collar shall be constructed such that at the interface with the asphalt, the collar shall be one-half inch (1/2”) lower than the pavement. The cast iron ring shall be constructed such that it is one-half inch (1/2”) lower than the pavement. Brick shall not be used to raise the manhole. Cones shall not be broken out to lower the ring to meet the road grade. Sections shall be removed and grade rings or adapter rings (riser) used. The maximum amount of grade rings to be used is a combined ten inches (10”). Any debris must be kept from entering sewer line and all debris removed.

Section 5.06 CONNECTIONS TO EXISTING SEWER:

Manholes used to connect the sewer to the existing sewer shall be plumb and centered on the existing pipe at the elevation designated and the base placed as specified. Care shall be taken not to disturb the alignment of the existing sewer.

The cutting of the existing sewer pipe shall be done in the presence of the Public Works Representative/Engineer. The cut shall be full area of the new pipe and shall be finished so as to leave no projections that will restrict the flow or catch solids.

Every precaution shall be taken to prevent any material from entering the sewer main. Any such materials entering the sewer shall be removed.

Section 5.07 INCOMING SEWER LINES:

In no case shall an incoming sanitary sewer be allowed to drop more that 12-inches to the base. In all cases the base shall have a channel for the incoming sewage. All manholes must be air tested. All debris must be removed including any that may have entered the sewer line itself.

Section 5.08 REVISIONS TO EXISTING MANHOLES:

All work required to revise or modify existing manholes, in connection with this project, as shown of the plans, or as directed by the Engineer, necessary to complete the project shall be done by the Contractor and no extra compensation shall be allowed for this work. This work shall include such incidentals as raising manhole floors, providing drop type inverts, new invert openings, etc.

DIVISION 6: VALVES, COUPLINGS, AND FIRE HYDRANTS

Section 6.01 GENERAL:

This section covers distribution valves to be used in the water system, couplings, and fire hydrants.

The Contractor shall furnish all valves indicated on the plans as called for in these specifications or as called for proper operation of the water system. Valve manufacturer shall provide detailed information as required by the Engineer for evaluating the quality of the valve. The technical information shall include complete dimensions, weights and material lists. No valve will be approved for installation until the required information has been received and approved. Except as otherwise specified, all buried valves shall be painted with two coats of asphalt varnish in accordance with the requirements of AWWA C 500. Gate valves shall be iron body, resilient seat, nonrising stem conforming to AWWA C 509 with double O-ring. Valves shall open counter clockwise. Valve ends shall be flanged or mechanical joint as required for the type of pipe used. Maximum shutoff pressure shall be 200 psi.

Gate valves, hydrants and fittings shall be located as shown on the plans or as directed by the Engineer or Public Works Department Director.

Section 6.02 RESILIENT SEATED GATE VALVE:

Valves in sizes 4" through 10" shall be of the iron body, non-rising bronze stem, resilient seated type, manufactured to equal or exceed all applicable AWWA standards of C-509 latest revision and all specific requirements outlined in these specifications.

Valves shall be iron body, bronze mounted, double disc with non-rising stems with design construction to AWWA C-500, and modifications herein. Stem seals shall be double O-ring seals valves shall open counterclockwise. Provide 2" square wrench nut for key operation. Operating valve nut shall be within 6-inches of finished surface grade. Install 24 inches of crushed rock from the bell top of the valve to the trench grade below the valve to provide proper drainage. Provide mechanical joint ends, except gate valves for use with fire hydrants.

1. Valves shall open left and be provided with 2" square operating wrench nuts unless otherwise specified.

2. When valves have Mechanical Joints, they shall be furnished with all necessary glands, followers, and bolts and nuts to complete installation.

3. The disc shall have integrally cast ASTM B-62 bronze stem nut to prevent twisting, binding or angling of the stem. Designs with loose stem nuts are not acceptable.

4. Bronze valve stems shall be interchangeable with stems of the double disc valves of the same size, direction of opening and manufacture.

5. All internal ferrous surfaces shall be coated, holiday free, to a minimum thickness of 4 mills with a two part thermo setting epoxy coating. Said coating shall be non-toxic, impart no taste to the water, formulated from materials deemed acceptable in the Food and Drug Administration Document Title 21 of the Federal Regulations on food additives, Section 121.2514 entitled Resins and Polymeric Coatings. It shall protect all seating and adjacent surfaces from corrosion and prevent build-up of scale or tuberculation.

6. The sealing element shall be secured to the disc with self-locking stainless steel screws, and it shall be field replaceable, and shall be such that it cannot be installed improperly.

7. Stem failure from over torquing in either the open or closing position shall occur externally at such a point as to enable the stem to be safely turned by use of a readily available tool after exposure of the valve through excavation.

8. Valve design shall incorporate a positive metal to metal stop to prevent over-compression of the sealing element.

9. A full faced composition gasket placed between machined body and bonnet flanges is required to eliminate cold flow or creep action present with "O" ring gasketed bodies.

10. Valves shall have a test plug in the bonnet area to vent air and allow line pressure testing.

11. The exterior of the valves shall be Asphalt Varnish, JAN-P-450. If exterior epoxy is used, all bolts and nuts shall be made of Stainless Steel to prevent galvanic corrosion of said nuts and bolts due to insulation from the ferrous valve and line.

Section 6.03 BUTTERFLY VALVE:

All valves 12 inches and larger shall be butterfly valves and shall conform to the latest revision of AWWA Standard C-504, Class 150-B, and comply with the following:

1. Valve bodies shall be cast iron, ASTM A-126 Class B. Body ends shall be flanged with facing and drilling in accordance with ANSI B16.1, Class 125; or mechanical joint in accordance with AWWA C-111. All mechanical joint end valves shall be furnished complete with joint accessories (bolts, nuts, gaskets, and glands). All valves shall conform to AWWA Standard C-504, Table 3, Laying Lengths for Flanged Valves and Minimum Body Shell Thickness for all Body Types.

2. Valve disc shall be ductile iron ASTM A-536, grade 65-45-12. Valve disc shall be of the offset design providing 360 degree uninterrupted seating.

3. The resilient seat shall be natural rubber bonded to an 18-8, Type 304 stainless steel retaining ring secured to the disc by 18-8, Type 304 stainless steel screws. The seat shall be capable of mechanical adjustment in the field and field replaceable without the need for special tools. Valve body seat shall be 18-8, Type 304 Stainless Steel.

4. Valve shafts shall be 18-8, Type 304 stainless steel. Shafts shall be of the two piece stub design and attached to the disc by means of "O" ring sealed taper pins with lock nuts.

5. The valve assembly shall be furnished with a non-adjustable factory set thrust bearing designed to center the valve disc at all times.

6. Shaft bearings shall be contained in the integral hubs of the valve body and shall be self-lubricated sleeve type.

7. Valve shaft seal shall consist of "O" Rings. Where the valve shaft projects through the valve body for actuator connection, the "O" Ring packing seal shall be field replaceable as a part of a removable bronze cartridge.

8. When manual actuators are required they shall be of the traveling nut design capable of withstanding 450 foot pounds of input torque against the open and closed stops. All actuators shall have adjustable mechanical stop limits. The closed position stop shall be externally adjustable. Valves shall be installed with the shaft horizontal unless otherwise directed by the Public Works Director/Engineer and shall be provided with a 2-inch square operating nut for manually operating the valve with a "T" handle wrench.

9. All valves shall be coated with epoxy in conformance to AWWA Standard C-550, latest revision. Interior wetted ferrous surfaces shall be coated nominal 10 mils thick for long life; and body exterior shall have a minimum of 3 to 4 mils coating thickness in order to provide superior base for field-applied finish coats.

Section 6.04 VALVE BOXES:

All buried valves shall be installed complete with two-piece, cast iron, 5-1/4-inch shaft valve box with locking lid. The lid shall have the words "Water" cast in the metal depending on the application.

Valves and valve boxes shall be installed where shown on the drawings. Valves and valve boxes shall be set plumb. Valve boxes shall be centered directly over the valve. Valves shall be aligned with property lines where possible. Earth fill shall be carefully tamped around the valve box to a distance of four (4) feet on all sides of the box, or to the undisturbed trench face if less than four (4) feet. Valves shall have the interiors cleaned of all foreign matter before installation. All valve boxes located in streets shall be installed to grade. Valves placed in asphalt surfacing shall be set in a concrete collar. The collar shall be at least twelve inches (12") thick and extend at least twelve inches (12") from the valve box. The concrete collar shall be constructed such that at the interface with the asphalt, the collar shall be one quarter inch (1/4") below the pavement.

Valve boxes in off-road areas shall extend six (6) inches above grade.

Irrigation Valve Boxes shall be buffalo type, sliding type with base as required for the valve size used and of sufficient length for the specified pipe bury. It shall have the word "sprinkler" or "irrigation" stamped thereon.

Cast iron valve boxes shall be firmly supported, and maintained centered and plumb over the wrench nut of the gate valve, with box cover flush with the surface of the finished pavement or at such other levels as may be directed. The valve shall be adequately supported and surrounded with two (2) feet in depth of fractured gravel around the base of the valve extending up to the bonnet. Valve boxes shall be flush with grade. Valve boxes located in road ways shall be encased in concrete at grade with a minimum of 12 inches deep and 12 inches beyond the outer edge. Valve boxes identifying culinary water locations shall be round in shape at grade.

Section 6.05 COUPLINGS:

Couplings shall be equal to the product of Smith-Blair or Dresser with ductile iron couplings being used on all ductile iron and PVC pipe. Couplings shall be of the straight, transition, or reducing style as required by the specific installation. Where the coupling is used to join a ductile iron line to a steel line appropriate transition gaskets will be used. All steel fittings and bolts shall be coated with a non-oxide coating and wrapped with polyethylene.

Latest standard style with rubber gasket for water. For diameters 4 inches to 14 inches middle ring to be a minimum of 1/4 inch thick and 5 inches long with 4 5/8 inch bolts for 4 inch diameters; 6 5/8 inch bolts for 6 and 8 inch diameters and 8 5/8 inch bolts for 10, 12, and 14 inch diameters.

Section 6.06 FIRE HYDRANTS:

Fire hydrants shall be "traffic model" type designed to conform to AWWA Specification C-502 and shall be of compression type. Hydrants shall be Mueller or Clow for consistency and maintenance purposes.

Hydrant valves shall be a minimum of 6-inch size. Hydrants shall be supplied complete with two 2 1/2-inch hose nozzles and one 4 1/2-inch pumper nozzle. All nozzles shall be provided with National Standard threading. A one cubic yard gravel sump shall be provided at each hydrant. Each hydrant shall also be supplied with O-ring seals, a National Standard pentagon operating nut which is designed for clockwise rotation closing, and a 6-inch mechanical joint inlet.

Hydrants shall be located in a manner to provide complete accessibility, and in such a manner that the possibility of damage from vehicles or injury to pedestrians will be minimized. Maximum separation distance between fire hydrants shall not be greater than 500 feet. Unless otherwise directed, the setting of any hydrant shall conform to Items 4, 5, 6, 7, and 8.

Fire hydrants shall meet the requirements of the current AWWA-Standard Specification C 502 for fire hydrants for ordinary water works service with the following supplementary qualifications:

(1) Length for depth of trench to be as specified.
(2) Two hose nozzles 2 1/2 inch diameter with national standard fire hose thread.

(3) One steamer nozzle 4 1/2 inch diameter when ordered with national standard fire hose thread.
(4) Counter clockwise to open.
(5) Operating nut pentagon, 1 1/2 inch point to flat.
(6) All internal parts to be removable from top of hydrant without the use of special tools.
(7) Operating valve nut shall be within 6-inches of finished surface grade.
(8) Meuller and Clow hydrants shall be used for consistency and maintenance purposes.

All hydrants shall stand plumb, and shall have their nozzles parallel with or at right angles to the curb, with the pumper nozzle pointing normal to the curb, except that hydrants having hose nozzles at an angle of 45 degrees shall be set normal to the curb. They shall conform to the established grade, with nozzles at least 12 inches above the ground.

A drainage pit 2 feet in diameter and 2 feet deep shall be excavated below each hydrant and filled compactly with coarse gravel or broken stone, mixed with coarse sand, under and around the bowl of the hydrant and to a level of 6 inches above the waste opening. No hydrant drainage pit shall be connected to a sewer.

The bowl of each hydrant shall be well braced against unexcavated earth at the end of the trench with concrete backing, or it shall be tied to the pipe with suitable rods or clamps.

Hydrants shall be thoroughly cleaned of dirt, or foreign matter before setting.

Standard plugs shall be inserted into the bells of all dead ends of pipe, toes or crosses and spigot ends shall be capped.

Reaction or thrust blocking shall be applied on all pipe lines 4 inches in diameter or larger at all tees, plugs, caps and at bends deflecting 22-1/2 degrees or more, or movement shall be prevented by attaching suitable metal rods or straps as directed by the Engineer. Thrust block size shall be determined by the Developer/ Contractor's engineer and shall be shown on the plans.

Reaction or thrust blocking shall be of concrete having compressive strength of not less than 2,000 psi. Blocking shall be placed between solid ground and the fitting to be anchored, the area of bearing on pipe and on ground in each instance shall be that required by the Engineer. The blocking shall be so placed that the pipe and fitting joints will be accessible for repair. The pipe shall be protected from the thrust block by a layer of 10 mil plastic.

All mechanical joints shall be wrapped with a layer of 10 mil plastic and all bolts greased.

Section 6.07 BLOW OFF VALVE:

A blow off valve is required on the culinary system in cul-de-sac's and in temporary dead-end streets. The installation in cul-de-sacs shall be permanent and shall come off the end of the culinary water line. Fire Hydrants may be used in place of Blow off Valve when approved by Public Works Director/ Engineer. A blow off valve shall also be required on the pressurized irrigation system at dead end or low elevation point connection lines in accordance with requirements and specifications of the City.

Section 6.08 AIR INLET AND REMOVAL FACILITY:

The connection to the main for the air inlet and removal facility shall be by a line size by 2-inch (or 1 inch) tapped tee for line sizes 4-inch through 12-inch and by a bronze service clamp, Mueller Model H-13490 for line sizes 14-inches and larger. Air inlet and removal facilities shall be placed at high points or uphill end points in the system. Tapping the main through the service clamp will be accomplished with standard tapping equipment before the system is put into service.

Connection to the tapped tee or service clamp shall be by a 1-inch or 2-inch brass MIP x Compression adapter. Piping and bends shall be 1-inch or 2-inch HDPE. This piping shall extend from the main to the utility box. The utility box shall house a 1-inch or 2-inch brass ball valve with screwed ends, 1-inch or 2-inch brass nipples, 1-inch or 2-inch brass 90° elbow, 1-inch or 2-inch by 2 1/2-inch brass reducer, 2 1/2-inch brass nipple and 2 1/2-inch fire hose connection. All threads except the fire hose connection shall be standard pipe threads. The fire hose connection shall have standard fire hose connection threads for a 2 1/2-inch fire hose. A fire hose cap with chain secured to the

stand pipe shall be installed at the end of the vertical stand pipe. For secondary water units installed near curb and gutter a 11 3/4-inch by 17-inch standard green fiberglass irrigation box with cover shall be installed over the 1-inch or 2-inch gate valve and 1-inch or 2-inch stand pipe. A sign shall be attached to or embossed on the cover indicating as follows: "AIR RELEASE". Box shall be Brooks 1419 series utility box and lid with recessed standard waterworks pentagon head locking device. For Units installed where there is no curb and gutter, the irrigation box shall be a 30-inch by 2-foot (30" X 2') concrete pipe section with a 24-inch CI manhole ring and grate equal to D&L Supply C-2670. For Culinary water units, the standpipe shall be located above ground and protected in a perforated steel pipe. For 1-inch or 2-inch standpipe, the steel pipe shall be minimum 5-inch diameter, otherwise a 6-inch steel pipe shall be used.

The Developer/Contractor shall provide smooth bore, circular woven suction hose reinforced with spring steel wire. The rubber friction cover shall be durable and resistant to wear and abrasion. The fire hose shall be two and one-half inch (2 1/2") National Fire hose 55-HD-77 or equivalent. Each hose shall be fitted with a two and one-half inch (2 1/2") male end adapter and a two and one-half inch (2 1/2") female end adapter firmly attached to withstand working pressures of 200 PSI. Each hose furnished for a unit with a fiberglass box shall also be provided with an Akron swivel elbow #632 or equivalent for connection of the fire hose to the air inlet and removal valve.

Section 6.09 PRESSURE IRRIGATION DRAINS:

When system drains are necessary to be installed on extensions of the pressure irrigation system they shall be constructed as a system drain to a curb inlet box or system drain to a storm drain pipe**.** The drain shall be constructed as shown on the Standard Drawings. The materials used shall meet the requirements of Division 3, Pressure Pipe Pressure Irrigation. The connection to the box or pipe shall be by coring a hole and grouting the drainpipe in. A non-shrink grout shall be used.

When a section of pressure irrigation pipeline has to be laid such that there is a belly in it then a local drain sump will need to be constructed. The drain shall be constructed as shown on the Standard Drawings. The materials used shall meet the requirements of Division 3, Pressure Pipe Pressure Irrigation, Division 4, Concrete Pipe, and Division 5, Manholes.

Section 6.10 CULINARY WATER CHECK VALVES:

Standard iron body swing check valves for 150 pound working pressure Crane, Ludlow or equal.

DIVISION 7: EARTHWORK

Section 7.01 GENERAL:

This section defines the requirements for excavation and backfill for streets and structures; construction requirements of earth embankments and earth fills; subgrade preparation; compaction and testing; removal of structures and fill; and erosion control.

Section 7.02 EXCAVATION FOR STRUCTURES:

Where suitable subgrade soils exist, structures shall be founded on undisturbed original subsoil. All unauthorized excavation below the specified subgrade shall be replaced with concrete, monolithic with that of the slab above or with coarse gravel thoroughly compacted into place.

Subgrade soils for structures not suitable for proper support shall be replaced with firm, dense, thoroughly compacted and consolidated material free from mud and muck. Coarse gravel or crushed stone may be used for subsoil reinforcement if satisfactory results can be obtained thereby. Such material shall be applied in thin layers, each layer being embedded in the subsoil by thorough tamping. All excess soil shall be removed to compensate for the displacement of the gravel or crushed stone and the finished elevation of any subsoil reinforced in this manner shall not be above the specified subgrade elevation.

Section 7.03 EXCAVATION FOR STREETS:

Excavation for street pavement and/or curb and gutter shall consist of the removal of all materials within the lines, grades and slopes shown on the plans or established by the City Engineer, including all earth, stone, loose rock, sand clay, shale, hard-pan, boulders, solid rock, stone blocks, roots, brush, trees, rubbish and all other materials of whatever nature that may be encountered within the lines, grades and slopes above described or that may be required in grading approaches to intersecting streets and alleys or in providing ditches at the ends of pipes, waterways and flumes.

Section 7.04 EXCAVATION BELOW SUB-GRADE:

If soft or otherwise undesirable material is found to exist at and below the sub-grade elevation, then such material shall be removed to the extent and in the manner designated by the Engineer.

Section 7.05 GRANULAR FOUNDATION BORROW:

Granular foundation borrow shall be compacted to not less than 96% of maximum dry density as determined by ASTM D-1557.

Section 7.06 BACKFILL AROUND STRUCTURES:

No backfilling around or behind structures shall be initiated until the concrete is fully cured for **seven days**. Backfill around structures shall be placed to the lines shown on the drawings, or as directed. After completion of foundation footings and walls and other construction below the elevation of the final grades, and prior to backfilling, all forms shall be removed and the excavation shall be cleaned of all trash and debris. Hand compacted fill, including fill compacted by manually-directed power tampers, shall be placed in layers whose thickness before compaction is not greater than four (4) inches. Material for backfilling shall consist of suitable excavated material or imported sand, gravel, or other suitable material with no rocks whose greatest dimension is larger than two (2) inches.

Fill shall be placed in a manner that will prevent damage to the structures and will allow the structures to assume the loads from the fill gradually and uniformly. The height of the fill adjacent to a structure shall be increased at approximately the same rate on all sides of the structure. Each layer shall be compacted by hand or machine tampers or by other suitable equipment to a density equal to 95% of maximum dry density as measured by ASTM D1557.

Section 7.07 CONSTRUCTION OF EMBANKMENTS AND FILLS:

A. **Clear and Grub:** On all portions of the work, where filling is required, the entire area shall first be stripped of all undesirable materials, as designated by the Inspector. The resulting surface, after the removal of all undesirable material, shall be scarified to the extent designated by the Inspector and brought to a uniform surface by means of graders or other suitable equipment, and shall be completed as provided in these specifications, before any embankment material is placed.

B. **Foundation Preparation:** Foundations for earth fill shall have unsuitable materials removed. Weeds, sod, roots (larger than 1/4-inch in diameter), vegetation, or other organic material shall be removed by clearing, stripping, and/or grubbing. Except as otherwise specified, earth foundation surfaces shall be graded to remove surface irregularities and shall be scarified parallel to the axis of the fill or otherwise acceptably scored and loosened to a minimum depth of six inches. The moisture content of the loosened material shall be controlled as specified for the earth fill, and the surface materials of the foundation shall be compacted and bonded with the first layer of earth fill as specified for subsequent layers of earth fill.

Earth abutment surfaces shall be free of loose, uncompacted earth in excess of 2 inches in depth normal to the slope and shall be at such a moisture content that the earth fill can be compacted against them to effect a good bond between the fill and the abutments.

Rock foundation and abutment surfaces shall be cleared of all loose material by hand or other effective means and shall be free of standing water when fill is placed upon them. Occasional rock outcrops in earth foundations for earth fill, except in dams and other structures designed to restrain the movement of water, shall not require special treatment if they do not interfere with compaction of the foundation and initial layers of the fill or the bond between the foundation and the fill.

C. **Placement:** Fill shall not be placed until the required excavation and foundation preparation have been completed and the foundation has been inspected and approved by the Public Works Director/Engineer and any Regulatory Agency having authority over the project. Fill shall not be placed upon a frozen surface, nor shall snow, ice, or frozen material be incorporated in the fill.

All excavated materials that have been approved by the Inspector for backfill purposes and that are needed for that purpose, shall be used at the points designated by the Inspector and in the following manner:

(1) The embankment shall be built by depositing approved material, in approximately level uniform layers, not exceeding six inches in thickness after compacting. Materials placed by dumping in piles or windrows shall be spread uniformly to not more than the specified thickness before being compacted.

(2) The material in place at both ends of any backfill, or where net material is placed against material in place, shall be plowed into the new material as the work progresses and shall be thoroughly scarified and worked into the new material and brought to the proper elevation before rolling of the layer being placed is commenced.

(3) If the material as found in excavation is too wet, as determined by the Inspector, then it shall be permitted to dry out to the extent required before being used in the embankment; or the material may be placed to the proper thickness on the embankment and worked with satisfactory equipment until the quantity of moisture in the material has been reduced to that required for maximum compaction. If the material as found in excavation is too dry, as determined by the Inspector, then it shall be moistened to the extent required and worked with harrows or other suitable equipment until the moisture throughout the material is uniform and contains the proper percentage of moisture, as determined by the Inspector, for proper compaction.

(4) All backfill materials shall be built to the lines, grades, and slopes shown on the plans or approved by the city engineer.

(5) backfill materials shall be compacted to 95% of maximum density (AASHO T-99 Test Procedure) unless otherwise specified by the City.

(6) Hand compacted fill, including fill compacted by manually-directed power tampers shall be placed in layers whose thickness before compaction is not greater than four (4) inches. All rock whose greatest dimension is larger than two-inch (2") shall be removed from the material receiving compaction by manually directed power tampers.

Earth fill designed to restrain the movement of water shall be placed so as to meet the following additional requirements:

1. The distribution of materials throughout each zone shall be essentially uniform, and the fill shall be free from lenses, pockets, streaks, or layers of material differing substantially in texture or gradation from the surrounding material.

2. If the surface of any layer becomes too hard and smooth for proper bond with the succeeding layer, it shall be scarified parallel to the axis of the fill, to a depth of not less than 2 inches before the next layer is placed.

3. The top surfaces of embankments shall be maintained approximately level during construction, except that a crown or cross-slope of not less than 2 percent shall be maintained to ensure effective drainage, and except as otherwise specified for drain fill zones. If the Drawings or specifications require or the Public Works Director/Engineer directs that fill be placed at a higher level in one part of the embankment than another is, the top surface of each part shall be maintained as specified above.

4. Dam embankments shall be constructed in continuous layers from abutment to abutment except where openings to facilitate construction of inlet and outlet pipes are specifically authorized in the contract.

5. Embankments built at different levels as described in 3 and 4 shall be constructed so that the slope of the bonding surfaces between the embankment in place and embankment to be placed is not steeper than 2 feet horizontal to 1-foot vertical. The bonding surface of the embankment in place shall be stripped of all loose material, scarified, moistened and recompacted when the new fill is placed against it. This is needed to ensure a good bond with the new fill, to obtain the specified moisture content and specified density at the junction of the in-place and new fill.

D. **Borrow**: When the embankment or fill exceeds the amount of excavation, sufficient additional material shall be obtained from borrow pits provided by the Developer/Contractor. All material proposed to be imported shall be subject to the review and approval of the Public Works Director/Engineer prior to starting of hauling operations.

The materials used for embankment and fill construction shall be free from sod, grass, roots larger than 1/4-inch diameter, trash, clods, rocks larger than four (4") inches in diameter, and all other material unsuitable for construction of compacted fills. If approved by the city, rotomilled asphalt meeting the large rock requirement may be used as borrow.

E. **Final Grading:** Grading of completed embankments and fills shall bring the surfaces to a smooth, uniform condition with final grades being within 0.1 foot of the design grade.

Section 7.08 CONSTRUCTION OF SUB-GRADE:

A. Preparation of Sub-Grade: In excavating the required material, the work shall be so handled as to leave in place sufficient material above the finished sub-grade elevation, to provide for compaction in building the sub-grade to the prescribed elevation.

B. Scarify and Compaction: After the materials have been excavated, as above described, then the sub-grade shall be scarified, after which the material shall be accurately graded to the required form of the finished

sub-grade and rolled with approved rollers to compaction required. If additional moisture is required, in order to produce the compaction required, then the proper quantity shall be applied uniformly, either before or after scarifying. If necessary, the material shall be scarified after the water is applied, in order to obtain uniform distribution of moisture and bring the material to a suitable condition. All rocks, boulders, or other unsuitable material shall be removed. The quantity of material, and its distribution, before rolling, shall be such that when compacted the required form and elevation will be secured. All sub-grade shall be compacted to 95% of maximum density (AASHO T-99 Test Procedure).

C. Completed Sub-Grade: The completed sub-grade shall accurately conform to the lines, grades and slopes shown on the plans or designated by the engineer and shall be maintained in satisfactory condition by the contractor. No driving or wheeling will be permitted on an unprotected sub-grade without the approval of the inspector.

D. Sub-Base: The depth of sub-base material shall be determined by soil exploration and load requirements. Such soil analysis shall be in accordance with acceptable engineering practices.

Section 7.09 COMPACTION OF MATERIALS:

Maximum density, as used in these Specifications, shall be defined as the maximum density obtained in the laboratory by ASTM D 1557. In-place density test procedures shall be in accordance with ASTM D 2922 and ASTM D 3017.

The material shall be deposited in horizontal layers having a thickness of not more than ten-inches (10") prior to being compacted as hereinafter specified. The distribution of materials shall be such that the compacted material will be homogeneous and free from lenses, pockets, or other imperfections.

During placement and compaction of fill, the moisture content of the materials being placed shall be maintained within the specified range, and the moisture content shall be uniform throughout the layers. Disking, blading or other approved methods prior to compaction of the layer shall obtain uniform moisture distribution. The moisture shall be controlled at a level to permit compaction of the fill as specified, but in no case greater or less than two percent plus or minus of the optimum moisture as determined by AASHTO T-99.

The application of water to the fill materials shall be accomplished at the borrow areas insofar as practicable. Water may be applied by sprinkling the materials after placement on the fill, if necessary.

Material that is too wet when deposited on the fill shall either be removed or dried to specified moisture content prior to compaction.

If the top surface of the preceding layer, a foundation or abutment surface in the zone of contact with the fill becomes too dry to permit suitable bond it shall be scarified and moistened by sprinkling to the required moisture content prior to placement of the next layer of fill.

When the material has been conditioned as here in before specified the backfill or embankment shall be compacted to a minimum of 96% of maximum dry density as determined by AASHTO T-99. Densification of earth fill shall be performed by equipment designated solely for that purpose. Each layer of fill shall be compacted as necessary to make the density of the fill matrix not less than the minimum density specified. The fill matrix is defined as the portion of the fill material finer than the maximum particle size used in the compaction test method specified.

Sub-section A. <u>Under Roadways</u>.

Under roadways and extending one foot beyond the proposed curb-line the fill or embankment material shall be compacted to a minimum of 96% of maximum density specified above.

Sub-section B. <u>Under Sidewalks and Driveways</u>.

Under sidewalks and driveways extending one foot each side of the edge of slab the fill or embankment material shall be compacted to a minimum of 96% of maximum density specified above.

Section 7.10 COMPACTION TESTING:

It shall be the responsibility of the Contractor to control his operations by confirmation tests to verify and confirm that he has complied, and is complying at all times, with the requirements of these Specifications concerning compaction, control, and testing.

Each location for trench compaction tests shall include tests for each layer, type, or class of backfill from bedding to finish grade or as required by inspector. The frequency of Contractor's confirmation tests shall be not less than as follows:

Situation	Test Frequency
Trench in open field	2 every 1000 linear feet
Trench along dirt or gravel road	2 every 500 linear feet
Trench crossing paved roads	2 locations along each crossing
Trench under pavement	1 location every 400 linear feet
Trench edge within 2 feet of pavement edge	1 location every 400 linear feet
Structural backfill	1 every 20 cubic yards
Embankment backfill	1 every 200 cubic yards
Base material	1 every 50 cubic yards

Confirmation tests shall be paid by the Contractor.

Copies of the test reports shall be submitted promptly to the inspector. The Contractor's tests shall be performed by a soils testing laboratory acceptable to the Inspector.

If compaction fails to meet the specified requirements, the Contractor shall remove and replace the backfill at proper density or shall bring the density up to specified level by other means acceptable to the inspector. Subsequent tests required to confirm and verify that the reconstructed backfill has been brought up to specified density shall be paid by the Contractor. The Contractor's confirmation tests shall be performed in a manner acceptable to the inspector. Frequency of confirmation tests for remedial work shall be double that amount specified for initial confirmation tests.

Section 7.11 REMOVAL OF DEFECTIVE OR EXCESS FILL:

Fill placement at densities lower than the specified minimum density or at moisture contents outside the specified acceptable range of moisture content or otherwise not conforming to the requirements of the specifications shall be reworked to meet the requirements or removed and replaced with acceptable fill. The replacement fill and the foundation, abutment and fill surfaces upon which it is placed shall conform to all requirements of this specification for foundation preparation, approval, placement, moisture control and compaction.

All excess or undesirable material that may be encountered in the work shall be disposed of by the contractor, in a manner approved by the Inspector, but it shall not be placed on other street or alleys without the Inspector's approval nor on private property without the approval of the owner, which approval shall be obtained by the contractor in writing.

Section 7.12 REMOVAL AND/OR REPLACEMENT OF EXISTING STRUCTRURES:

Should it be found necessary to remove, build and/or rebuild existing pipelines, flumes, monuments, manholes and other structures, or to reset metal covers and frames, etc., then said work shall be done as shown on the approved plans.

Section 7.13 EROSION CONTROL/ REVEGTATION

1. Definition: Placement of seed material or sod over open area for temporary or permanent erosion control.

2. Purpose: To Reduce velocity of storm water runoff and to reduce erosion by preventing rainfall directly hitting soil.
3. Application: All areas disturbed by construction activity, including cut and fill slopes.
4. Limitations: Revegetation on slopes steeper than 3:1 must utilize geotextiles to promote establishment of vegetative cover.
5. Installation of temporary seeding:
   (a) Grade and shape the area to be seeded so that it will drain properly and accommodate seeding equipment.
   (b) Loosen compacted soil by racking, or disking where hydraulic seeding will not be used, to provide for seed retention and germination.
   (c) Apply seed and fertilization suitable for the area and season. The seed species and fertilization requirements must be developed by a professional or the local Soil Conservation Service Office.
6. Installation of permanent seeding:
   (a) Grade Loosen compacted soil racking, or disking where hydraulic seeding will not be used, to provide for seed retention and germination.
   (b) Spread at least 3 inches of topsoil, if required, before seeding. If topsoil is required, the subsoil should be serrated or disked to provide an interface.
   (c) Apply seed and fertilization suitable for the area and season. The seed species and fertilization requirements must be developed by a professional or the local Soil Conservation Service Office.
7. Maintenance:
   (a) Inspect seeded areas after every rainfall event and at a minimum of monthly.
   (b) Replace seed on any bare areas, or area showing signs of erosion as necessary.

Section 7.14 EROSION CONTROL/ MULCHING

1. Definition: Placement of material such as straw, grass, wood-chips, wood-fibers or fabricated matting over open area.
2. Purpose: To reduce the velocity of storm water runoff; reduce erosion by preventing rainfall directly hitting the soil; and facilitate plant growth by holding seeds and fertilizer in place, retaining moisture and providing insulation against extreme temperatures.
3. Application: This shall apply to any of the following situations: Any exposed area to remain untouched; Any exposed area to remain untouched longer than 14 days and that will be exposed less than 60 days; Areas that have or will be seeded; or Stockpiled soil material.
4. Limitations: Anchoring may be required to prevent migration of mulch material. Down-gradient control may be required to prevent mulch material from being transported to the storm water system.
5. Installation: Rough area to revive mulch to create depressions that mulch material can settle into. Ensure material used is weed free and does not contain any constituent that will inhibit plant growth. Apply mulch to require thickness and anchor as necessary. Recommended application rates as follows:

Material	Application	Depth	Comments
Gravel: Washed ¾" to 1 ½"	9 cu yd/1000 sq ft	3 inches	Good for traffic areas. Good for short slopes.
Straw: Air-Dried, free of seeds and coarse material.	2-3 bales/1000 sq ft	2 inches (Min.)	Subject to wind blowing. Tack down or keep moist.
Wood Fiber Cellulose: Free from growth inhibitors; dyed green	25-30 lb/1000 sq ft	1 inch (Min.)	For critical areas, double application rate; Limit to slopes <3% and <150 feet

6. Maintenance: Inspect mulched areas after every rainfall event and at a minimum of monthly. Replace mulch and any bare areas and re-anchor as necessary. Clean and replace down-gradient controls as necessary.

DIVISION 8: PORTLAND CEMENT CONCRETE

Section 8.01 GENERAL:

This section defines the requirements for concrete type, class, aggregates, water air, water reducing, curing, testing, measurement, mixing, and placement. It also includes construction, expansion and contraction joints. It also includes surface finishing, curing, and replacement of defective concrete. Concrete placement in cold or hot weather conditions is also specified herein.

Section 8.02 CEMENT TYPE:

Portland cement shall be Type II and shall comply with the Standard Specification for Portland Cement, ASTM C-150. In areas where there is no exposure to sulfates in the soil or ground water, Type I cement is permissible. Cement content shall not be decreased because of the addition of certain admixtures. A certified analysis of the cement shall be presented to the City Engineer upon request.

Section 8.03 CLASS OF CONCRETE:

For the purpose of practical identification, concrete has been divided into four classes: Class AA(AE), A(AE), B(AE) and C(AE). The specific use for each Class is identified in the Division in which the concrete is used. The symbol (AE) designates air-entrainment. Basic requirements for each class are as follows:

Class of Concrete	Maximum Net Water Content (gallons/bag)	Minimum Cement Content (bags/cu. yd)	Minimum 28-day Comp. Strength (psi)	Typical Applications
AA(AE)	5	6 1/2	4000	Reinforced Structural Concrete
A(AE)	6	6	3500	Sidewalks- Curb & Gutter
B(AE)	7	5	2500	Reinforced footing and foundations
C(AE)	8	4	2000	Thrust Blocks

Section 8.04 CONCRETE AGGREGATE:

Aggregates shall conform to Tentative Specifications for Concrete Aggregates, ASTM C-33 for the specified sizes. Aggregates that fail to meet any requirement may be accepted only when: (1) the specified alternate conditions of acceptance can be proved prior to the use of the aggregates on the job and within a period of time such that no work under the contract will be delayed by the requirements of such proof; or, (2) the specification for concrete expressly contains a provision of special mix requirements to compensate for the effects of the deficiencies.

The potential reactivity of aggregates with the alkalis in cement shall be evaluated by petrographic examination and, where applicable, the chemical method of test, ASTM Designation C 289, or by the results of previous tests or service records of concrete made from similar aggregates from the same source. The standards for evaluating potential reactivity shall be as described in ASTM Specification C-33, Appendix A1.

Aggregates indicated to be potentially reactive, but within acceptable limits as determined by mortar bar test results or service records, shall be used only with "low alkali" cement, containing less than 0.60 per cent alkalis expressed as sodium oxide.

Aggregates indicated by any of the above to be potentially reactive shall not be used, except under one of the following conditions:

1. Applicable test results of mortar bar tests, made according to ASTM Method C-227, are available which indicate an expansion of less than 0.10 per cent at six months in mortar bars made with cement containing not less than 0.8 per cent alkalis expressed as sodium oxide; or

2. Concrete made from similar aggregates from the same source has been demonstrated to be sound after 3 years or more of service under conditions of exposure to moisture and weather similar to those anticipated for the concrete under these specifications.

Aggregate of each class and size shall be stored and handled by methods that prevent segregation of particle sizes or contamination by intermixing with other materials.

Aggregates maximum size shall be not larger than one-fifth (1/5) of the narrowest dimension between forms within which the concrete is to be cast, nor larger than three-fourths (3/4) of the minimum clear spacing between reinforcing bars or between reinforcing bars and forms. For un-reinforced concrete slabs, the maximum size of aggregates shall not be larger than one-fourth (1/4) the slab thickness.

Section 8.05 WATER FOR CONCRETE:

Water shall be cleaned and free from injurious amounts of oil, salt, acid, alkali, organic matter or other deleterious substances. Water shall be added to the mix to produce concrete with the minimum practicable slump. The slump of mechanically vibrated concrete shall not exceed four-inch (4"). No concrete shall be placed with a slump in excess of four-inch (4").

Section 8.06 AIR ENTRAINMENT:

If air-entraining cement is to be used, the Developer/Contractor shall furnish the manufacturers written statement giving the source, amount and brand name of the air-entraining addition.

Air-entraining agent shall be used in all concrete exposed to the weather. The air-entraining agent shall be added as liquid to the mixing water by means of mechanical equipment capable of accurate measurement and control. The agent shall conform to ASTM Designation C-175 and C-260, except that the relative durability factor in the freezing and thawing test shall be not less than 95. Air-Content for air-entrained concrete shall comply with the following:

Course Aggregate Size (in.)	Air Content (percent)
1 1/2 to 2 1/2	5 ± 1
3/4 or 1	6 ± 1
3/8 or 1/2	7 ± 1

Section 8.07 STEEL REINFORCEMENT:

Refer to Division 9 Reinforcing Steel

Section 8.08 WATER REDUCING AGENT:

Water reducing, set retarding admixtures shall not be used except with previous approval from the Public Works Director/Engineer and shall in such a case, conform to the standards of materials set forth in the specification.

Water-reducing and set-retarding admixtures shall conform to the requirements of ASTM Specification C-494, except that resistance to freezing and thawing shall be determined in all cases, and the minimum relative durability factor shall be 95.

Admixtures shall be Type A, Water-Reducing or Type D, Water-Reducing and Retarding, as defined in ASTM Specification C-494.

When added, in the manner and amount recommended by the manufacturer, to the concrete used on the job, with no change in the cement content or proportions of the aggregates, admixtures shall have the following effects:

> Type A or Type D: The water content at the required slump shall be at least 5 per cent less with the admixture than without. The air content shall remain within the range specified, but shall not exceed 8 percent in any case.
>
> Type D: The time of initial setting, determined as prescribed in ASTM C-494, shall be from 1 to 3 hours longer with the admixture than without.

Section 8.09 CURING COMPOUND:

Curing compound for concrete shall meet the requirements of ASTM Specification C-309.

Unless otherwise specified, the compound shall be Type 2.

All curing compound shall be delivered to the site of the work in the original container bearing the name of the manufacturer and the brand name. The compound shall be stored in a manner to prevent damage to the containers and to protect water-emulsion types from freezing.

Section 8.10 DESIGN OF THE CONCRETE MIX:

The proportions of the aggregates shall be such as to produce a concrete mixture that will work readily into the corners and angles of the forms and around reinforcement when consolidated, but will not segregate or exclude free water during consolidation.

Prior to placement of concrete, the Developer/ Contractor shall furnish the Public Works Representative/ Engineer, for approval, a statement of the materials and mix proportions (including admixtures, if any) it intends to use. The statement shall include evidence satisfactory to the Public Works Director/Engineer that the materials and proportions will produce concrete conforming to this specification. The materials and proportions so stated shall constitute the "job mix." After the job mix has been reviewed for conformance to specification by the Public Works Representative/ Engineer, neither the source, character, grading of the aggregates, the type and brand of cement, nor admixture shall be changed without prior notice to the Public Works Representative/ Engineer. If such changes are necessary, no concrete containing such new or altered materials shall be placed until the Public Works Director/ Engineer has approved a revised job mix.

Section 8.11 OBSERVATION AND TESTING:

It shall be the responsibility of the Developer/ Contractor to test the concrete during construction to ensure that it meets the city specifications. The city reserves the right to randomly test the concrete to verify that the construction conforms to the requirements of the specifications. Such tests are not intended to provide the Developer/ Contractor with the information required by it for the proper execution of the work and their performance shall not relieve the Developer/ Contractor of the necessity of completing the construction in accordance with these specifications and Standard Drawings.

The Public Works Director/ Engineer shall have free entry to the plant and equipment furnishing concrete under the contract. Proper facilities shall be provided for the Public Works Director/Engineer to observe the materials, equipment and processes and to obtain samples of the concrete. All tests and observations will be conducted so as not to interfere unnecessarily with manufacture and delivery of the concrete. Not less than one test shall be made for each 150 cubic yards of concrete, nor less than one test for each day's concreting. These tests shall be made at the option of the Inspector.

The City reserves the right to forbid the use of material from any plant, pit or source when the character of material, equipment in use or the method of operation is such, in his opinion as to make it doubtful that a reasonable uniform class of material will be furnished.

Section 8.12 HANDLING AND MEASUREMENT OF MATERIALS:

Cement shall be stored in such a manner as to be protected from weather, dampness or other destructive agents. Cement that is partially hydrated or otherwise damaged will be rejected.

Materials shall be stockpiled and batched by methods that will prevent segregation or contamination of aggregates and insure accurate proportioning of the ingredients of the mix.

Cement and aggregates shall be measured as follows:

Cement shall be measured by weight or in bags of 94 pounds each. When cement is measured in bags, no fraction of a bag shall be used unless weighed.

Aggregates shall be measured by weight. Mix proportions shall be based on saturated, surface-dry weights. The batch weight of each aggregate shall be the required saturated, surface-dry weight plus the weight of surface moisture it contains.

Water shall be measured by weight, to accuracy within one per cent of the total quantity of water required for the batch.

Admixtures shall be measured within a limit of accuracy of 3 per cent.

Section 8.13 MIXERS AND MIXING:

Concrete shall be uniform and thoroughly mixed when delivered to the work. Proper mixing shall be accomplished either by truck or by stationary mixers. Variations in slump of more than 1 inch within a batch will be considered evidence of inadequate mixing and shall be corrected by increasing mixing time or other means. For stationary mixers, the mixing time after all cement and aggregates are in the mixer drum shall be not less than 1 1/2 minutes. When concrete is mixed in a truck mixer, the number of revolutions of the drum or blades at mixing speed shall be not less than 70 or more than 100.

Unless otherwise specified, volumetric batching and continuous mixing at the construction site will be permitted if approved by Public Works Representative/Engineer. The batching and mixing equipment shall conform to the requirements of ASTM Specification C-685 and shall be demonstrated prior to placement of concrete, by tests with the job mix, to produce concrete meeting the specified proportioning and uniformity requirements. Concrete made by this method shall be produced, inspected, and certified in conformance with Sections 6, 7, 8, 13, and 14 of ASTM Specification C-685.

No mixing water in excess of the amount called for by the job mix shall be added to the concrete during mixing or hauling or after arrival at the delivery point.

Section 8.14 FORMS:

Forms shall be of wood, plywood, steel or other approved material and shall be mortar tight. The forms and associated false-work shall be substantial and unyielding and shall be constructed so that the finished concrete will conform to the specified dimensions and contours. Form surfaces shall be smooth and free from holes, dents, sags or other irregularities. Forms shall be coated with non-staining form oil before being set into place.

Metal ties or anchors within the forms shall be equipped with cones, she-bolts or other devices that permit their removal to a depth of at least one inch without injury to the concrete.

All edges that will be exposed to view when the structure is completed shall be chamfered by placing molding in the forms, unless finishing with molding tools.

Section 8.15 PREPARATION OF FORMS AND SUBGRADE:

Prior to placement of concrete the forms and subgrade shall be free of chips, sawdust, debris, water, ice, snow, extraneous oil, mortar, or other harmful substances or coatings. Any oil on the reinforcing steel or other surfaces required to be bonded to the concrete shall be removed. Rock surfaces shall be cleaned by air-water cutting, wet sandblasting or wire brush scrubbing, as necessary, and shall be wetted immediately prior to placement of concrete. Earth surfaces shall be firm and damp. Placement of concrete on mud, dried earth or uncompacted fill or frozen subgrade will not be permitted.

Unless otherwise specified, when concrete is to be placed over drain fill, the contact surface of the drain fill shall be covered with a layer of asphalt-impregnated building paper or polyvinyl sheeting prior to placement of the concrete. Forms for weep-holes shall extend through this layer into the drain fill.

Items to be embedded in the concrete shall be positioned accurately and anchored firmly. Weep-holes in walls or slabs shall be formed with nonferrous materials.

The place of deposit shall be prepared by adequate forming, proper compaction, necessary drainage, and sufficiently moistened to minimize loss from the freshly placed concrete.

Section 8.16 CONVEYING:
The transporting equipment shall be such as to deliver the concrete to the place of use without segregation and without undue loss of moisture.

Concrete shall be delivered to the site and discharged into the forms within 1 1/2 hours after the introduction of the cement to the aggregates. In hot weather or under conditions contributing to quick stiffening of the concrete, the time between the introduction of the cement to the aggregates and discharge shall not exceed 45 minutes. The Public Works Director/ Engineer may allow a longer time, provided the setting time of the concrete is increased a corresponding amount by the addition of an approved set-retarding admixture. In any case, concrete shall be conveyed from the mixer to the forms as rapidly as practicable by methods that will prevent segregation of the aggregates or loss of mortar.

Section 8.17 CONCRETE BATCH TICKET:

An original copy of the concrete batching ticket shall be given to the City inspector, at time of delivery. Ticket shall include the plant designation, ticket number, mix design number, slump, air entrainment, type of concrete, gallons of water added on site, time of leaving plant, time of arrival on site and bag mix. Concrete could be rejected if ticket is not available and does not meet City standards.

Section 8.18 BEFORE PLACING CONCRETE:

Concrete shall not be placed until the sub-grade, forms and steel reinforcement have been inspected and approved. No concrete shall be placed except in the presence of the Public Works Representative/ Engineer. The Developer/ Contractor shall give 48-hour notice to the Public Works Director/ Engineer each time it intends to place concrete. Such notice will give the Public Works Director/ Engineer adequate time to inspect the subgrade, forms, steel reinforcement and other preparations for compliance with the specifications before concrete is delivered for placing.

Section 8.19 PLACING CONCRETE:

The concrete shall be deposited as closely as possible to its final position in the forms and shall be worked into the corners and angles of the forms and around all reinforcements and embedded items in a manner to prevent segregation of aggregates or excessive laitance. Unless otherwise specified, slab concrete shall be placed to design thickness in one continuous layer. Formed concrete shall be placed in horizontal layers not more than 20 inches thick. Hoppers and chutes, pipes or "elephant trunks" shall be used as necessary to prevent splashing of mortar on the forms and reinforcing steel above the layers being placed.

Section 8.20 AFTER PLACING CONCRETE:

Immediately after the concrete is placed in the forms, it shall be consolidated by spading, hand tramping or vibration as necessary to insure smooth surfaces and dense concrete. Each layer shall be consolidated to insure monolithic bond with the preceding layer. If the surface of a layer of concrete in place sets to the degree that it will not flow and merge with the succeeding layer when spaded or vibrated, the Developer/ Contractor shall discontinue placing concrete and shall make a construction joint according to the procedure specified.

If placing is discontinued when an incomplete horizontal layer is in place, the unfinished end of the layer shall be formed by a vertical bulkhead.

Section 8.21 PLACING CONCRETE IN WALLS:

If the concrete is being placed in walls or structures more than five feet high, it shall be deposited into final position by means of tremies or similar equipment, and the maximum lateral movement of the concrete from any point of deposit shall not be more than five feet. It shall be deposited in even layers, not more than 24 inches in depth, and each layer shall be thoroughly vibrated preceding lift and next to the forms to insure a smooth surface and the removal of air pockets. Particular attention shall also be given to working of the concrete around reinforcing steel and embedded fixtures in such manner as to produce a continuous homogeneous mass filling all corners and

eliminating segregation of aggregate and air pockets. An internal vibrator shall be inserted vertically at intervals of from 18 inches to 30 inches, depending on the thickness of the concrete. It shall be held in position and gradually withdrawn when air bubbles no longer come to the surface, which will usually require from five to fifteen seconds. All concrete shall be vibrated within 15 minutes after being placed in the forms. The vibrator shall not be permitted to come in contact with the forms, the reinforcing steel or embedded fixtures or to over-vibrate the concrete at any point. Concrete shall not be transported laterally by means of vibrators.

Section 8.22 JOINING TO CURED CONCRETE

In joining new concrete to old, the old concrete shall be thoroughly treated with concrete epoxy preceding the lacing of the new concrete. All surface film shall be removed from the old concrete, the surface roughened and thoroughly washed to remove loose particles. The methods employed to prepare the surface of the old concrete shall be approved by the inspector in advance. A layer of mortar of the same proportions and consistency as the mortar used in the new concrete shall be thoroughly boomed into the surface of the old concrete, immediately before the new concrete is placed, but no pools of water shall be permitted on the surface of the old concrete when the mortar is placed.

Section 8.23 CONSTRUCTION JOINTS:

Construction joints shall be made at the locations shown on the Drawings. If construction joints are needed which are not shown on the Drawings, they shall be placed in locations approved by the Public Works Representative/ Engineer.

Where a featheredge would be produced at a construction joint, as in the top surface of a sloping wall, an inset form shall be used so that the resulting edge thickness on either side of the joint is not less than six-inches (6").

In walls and columns, as each lift is completed, the top surfaces shall be immediately and carefully protected from any condition that might adversely affect the hardening of the concrete.

Steel tying and form construction adjacent to concrete in place shall not be started until the concrete has cured at least 12 hours. Before new concrete is deposited on or against concrete that has hardened, the forms shall be retightened. New concrete shall not be placed until the hardening concrete has cured at least 12 hours.

Surfaces of construction joints shall be cleaned of all unsatisfactory concrete, laitance, coatings or debris by washing and scrubbing with a wire brush or wire broom or by other means approved by the Public Works Representative/ Engineer. The surfaces shall be kept moist for at least one hour prior to placement of the new concrete.

Section 8.24 EXPANSION AND CONTRACTION JOINTS:

Expansion and contraction joints shall be made only at locations shown on the drawings.

Exposed concrete edges at expansion and contraction joints shall be carefully tooled or chamfered, and the joints shall be free of mortar and concrete. Joint filler shall be left exposed for its full length with clean and true edges.

Preformed expansion joint filler shall be held firmly in the correct position as the concrete is placed.

Open joints, when specified, shall be constructed by the insertion and subsequent removal of a wooden strip, metal plate or other suitable template in such a manner that the corners of the concrete will not be chipped or broken. The edges of open joints shall be finished with an edging tool prior to removal of the joint strips.

Section 8.25 WATERSTOP:

Waterstops shall be held firmly in the correct position as the concrete is placed. Joints in metal waterstops shall be soldered, brazed or welded. Joints in rubber or plastic waterstops shall be cemented, welded or vulcanized as recommended by the manufacturer.

Section 8.26 REMOVAL OF FORMS:

Forms shall not be removed without the approval of the Public Works Representative/ Engineer. Forms may be removed when the concrete has sufficient strength to carry its own weight and the loads upon it with safety (approximately 75% of design strength or at the discretion of the engineer.) Forms shall be removed in such a way as to prevent damage to the concrete. Supports shall be removed in a manner that will permit the concrete to take the stresses due to its own weight uniformly and gradually.

Section 8.27 FINISHING FORMED SURFACES:

Immediately after the removal of the forms all fins and irregular projections shall be removed from exposed surfaces. On all surfaces, the holes produced by the removal of form ties, cone-bolts, and she-bolts shall be cleaned, wetted and filled with a dry-pack mortar consisting of one part Portland cement, three parts sand that will pass a No. 16 sieve, and water just sufficient to produce a consistency such that the filling is at the point of becoming rubbery when the material is solidly packed.

Section 8.28 FINISHING UNFORMED SURFACES:

Finishing shall provide a pleasant appearing surface, as well as a protective coat against weathering effects. All exposed surfaces on the concrete shall be accurately screeded to grade and then float finished, unless specified otherwise. Excessive floating or troweling of surfaces while the concrete is soft will not be permitted. The addition of dry cement or water to the surface of the screeded concrete to expedite finishing will not be allowed. Joints and edges on unformed surfaces that will be exposed to view shall be chamfered or finished with molding tools.

Section 8.29 CURING AND PROTECTION:

Concrete shall be prevented from drying for a curing period of at least 7 days after it is placed. Exposed surfaces shall be kept continuously moist for the entire period, or until curing compound is applied as specified below. Sprinkling, flooding or fog spraying shall maintain moisture or by covering with continuously moistened canvas, cloth mats, straw, sand or other approved material. Wood forms (except plywood) left in place during the curing period shall be kept wet. Formed surfaces shall be thoroughly wetted immediately after forms are removed and shall be kept wet until patching and repairs are completed. Water or covering shall be applied in such a way that the concrete surface is not eroded or otherwise damaged. As soon as the concrete has hardened sufficiently to prevent damage, the finished surface shall be protected for curing one of the following ways:

1. Application of light colored waterproof plastic materials, conforming to "Specifications for Waterproof Sheet Materials for Curing Concrete" ASTM C-171, placed and maintained in contact with the surface of the concrete.

2. Application of a curing compound, conforming to "Specifications for Liquid Membrane - Forming Compounds for Curing Concrete" ASTM C-309. The compound shall be light in color and shall be applied in accordance with the manufacturer's recommendations immediately after any water sheen, which may develop after finishing, has disappeared from the concrete surface.

3. Ponding of water on the surface or continuous sprinkling.

4. Application of absorptive mats such as three-inches (3") of cured hay, clean straw or fabric kept continuously wet.

5. Application of two-inches (2") of moist earth or sand uniformly distributed on the surface and kept saturated by spraying with water.

Curing compound shall not be applied to surfaces requiring bond to subsequently placed concrete, such as construction joints, shear plates, reinforcing steel and other embedded items. If the membrane is damaged during the curing period, the damaged area shall be re-sprayed at the rate of application specified above.

Section 8.30 REMOVAL OR REPAIR:

When concrete is honey combed, damaged or otherwise defective, the Developer/Contractor shall remove and replace the structure or structural member containing the defective concrete or, where feasible, correct or repair the defective concrete. Prior to starting repair work the Developer/ Contractor shall obtain the Public Works Representative/ Engineer's approval of its plan for effecting the repair. The Developer/ Contractor shall perform all repair work in the presence of the Public Works Representative/Engineer. In all cases the contractor shall assume all responsibility arising from preparing, placing, and the removal of forms, and shall assure himself that the concrete is properly cured to sustain loads before forms are removed.

Section 8.31 CONCRETING IN COLD WEATHER:

Concrete shall not be mixed nor placed when the daily minimum atmospheric temperature is less than 40 degrees unless facilities are provided to prevent the concrete from freezing. The use of accelerators or antifreeze compounds will not be allowed. ACI 306R: Cold weather concreting shall be followed.

If the contractor desires to place concrete in cold weather he shall assume all responsibility for damage that may be caused by freezing or by any other cause, even though permission to proceed may have been given by the Engineer. In no case, however, shall concrete be placed when the temperature is 40° Fahrenheit and falling, unless the contractor has complied with the following requirements and such additional precautions:

(a) Provision shall be made for heating the water and, if necessary, the aggregates, also. If the aggregates are heated, it shall preferably be done with steam by means of closed steam coils.

(b) All concrete materials, forms, fillers and ground with which the concrete is to come in contact shall be free from frost.

(c) The temperature of the mixed concrete when placed in the forms shall be between 50°F. and 70°F., depending on the temperature of the air. Whenever the temperature of the surrounding air is below 40 degrees Fahrenheit, all concrete when placed in forms shall have a minimum temperature of 50 degrees Fahrenheit and shall be maintained at a temperature of not less than 40 degrees Fahrenheit for at least 72 hours.

(d) Concrete subject to freeze/thaw shall be air entrained to a content of 6% + 1.5%

(e) When the concrete has been placed, the forms and concrete shall be covered with tarpaulins or other approved covering and a sufficient number of perforated steam pipes provided under the covering to maintain the temperature needed to ensure proper curing.

(f) The use of any admixture to lower the freezing point of the concrete is forbidden.

(g) No concrete shall be placed upon a frozen subgrade and no frozen materials shall be used in the concrete.

(h) Replacement of concrete in temperatures below 50 F shall be provided with additional expansion material at each end of area affected and covered to prevent damage to concrete during curing process.

(i) Salamanders shall not be used without special permission from the City Engineer, and if the use of salamanders is permitted, then each salamander shall have a vessel containing water placed on it in order to maintain the necessary humidity to prevent drying of the concrete. Water shall be maintained continuously in the vessel.

(j) The material shall be free from ice, snow and frozen lumps when introduced into mixer.

Section 8.32 CONCRETING IN HOT WEATHER:

The Developer/Contractor shall apply effective means to maintain the temperature of the concrete below 90 degrees during mixing, conveying and placing. ACI 305R: Hot weather concreting shall be followed.

Whenever the ambient temperature is above 80°F or the humidity is below 10%, the City Engineer may, at his discretion, require trial batches to determine the period of initial set. If, in the opinion of the City Engineer, weather

conditions are such that the initial set is accelerated, the maximum period specified for mixing, placement and compaction shall be reduced to allow at least 10 minutes time before initial set. The term "initial set" shall be construed as the time in which, in the opinion of the engineer, the concrete is no longer workable. Necessary steps will be taken at the direction of the engineer to protect the concrete from undesirable effects of heat. These steps may include:

(a) Spraying forms, reinforcing steel and subgrade to prevent absorption of water from mix.

(b) Erecting sun shades and wind breaks.

(c) Protect slabs before final finishing by covering with waterproof cover or visqueen.

(d) Spraying outside of forms to cool concrete.

(e) Cooling mixing water.

(f) Spraying coarse aggregate to reduce temperature.

Section 8.33 CONCRETE WASTE

Waste Concrete Disposal all waste concrete shall be disposed of within an approved location according to E.P.A. standards including any washout of chutes of trucks and trailers. This site shall be established by the developer for each phase and or construction site as approved by the inspector

DIVISION 9: REINFORCING STEEL

Section 9.01 GENERAL:

This section defines the requirements for reinforcement material, size, clearance, fabrication, support, splicing, placing, coating, cutting, and inspecting. These specifications shall apply where the International Building Code does not.

Section 9.02 MATERIAL:

Use deformed billet-steel bars as specified. All reinforcing bars used for concrete reinforcement shall be Grade 60 deformed bars conforming to ASTM A615 and shall include the supplementary requirements. Wire Fabric shall conform to ASTM A185-70. Steel reinforcement shall be free from rust, oil, grease, paint or other deleterious matter. All steel shall be clean and free from mill scale, flakes of loose rust, cement, concrete, paint, oil, grease or any other foreign material.

Section 9.03 PRE-APPROVAL OF REINFORCEMENT:

Before supply of steel, the Developer/Contractor shall provide all order lists and bending diagrams for approval of the Public Works Representative/ Engineer. The approval of such lists and diagrams shall in no way relieve the Developer/Contractor of responsibility for the correctness of reinforcing supplied and all expenses incidental to revision of furnished reinforcing steel shall be carried by the Developer/Contractor.

Section 9.04 FABRICATION:

Reinforcement shall be cold bent to the shapes shown in accordance with ACI 1997 Standard Code (ACI 318-97) Chapter 7 Section 7.1. If the fabric reinforcement is shipped in rolls, it shall be straightened into flat sheets before being placed.

Section 9.05 SIZE AND CLEARANCE:

All bars shall be of the size specified and shall be placed in the positions shown on the Drawings in such a manner as to be firmly held during the placing of the concrete. Where not otherwise indicated, minimum clearance and cover as required by the ACI Code, Section 7.7 shall be maintained.

Reinforced Clearances for Cast In Place Concrete
(Not Pre-stressed)

Concrete cast against and permanently exposed to earth	Min Cover (inch)
All Bars	3
Concrete exposed to earth or weather:	
No. 6 through No. 18 Bar	2
No. 5 Bar, W31 or D31 wire, and smaller	1 1/2
Concrete not exposed to weather or in contact with ground:	
Slabs, Walls, and Joists: No. 14 and no. 18 Bar	1 1/2
Slabs, Walls, and Joists: No. 11 Bar and smaller	3/4
Beams, Columns: Primary reinforcements, ties, stirrups, spirals	1 1/2
Shells, Folded Plate Members: No. 6 Bar and larger	3/4
Shells, Folded Plate Members: No. 5 Bar, W31 or D31 wire, and smaller	1/2

Reinforced Clearances for Precast Concrete (Manufactured Under Plant Controlled Conditions)	
Concrete exposed to earth or weather:	Min Cover (inch)
Wall Panels: No. 14 and No. 18 Bars	1 1/2
Wall Panels: No. 11 Bar and smaller	3/4
Other Members: No. 14 and No. 18 Bars	2
Other Members: No. 6 through No. 11 Bars	1 1/2
Other Members: No. 5 Bar, W31 or D31 wire, and smaller	1 1/4
Concrete not exposed to weather or in contact with ground:	
Slabs, Walls, Joists: No. 14 and No. 18 Bars	1 1/4
Slabs, Walls, Joists: No. 11 Bar and smaller	5/8
Beams, Columns: Primary reinforcement	1 1/2
Beams, Columns: Ties, stirrups, spirals	3/8
Shells, folded plate members: No. 6 Bar and larger	5/8
Shells, folded plate members: No. 5 Bar, W31 or D31, and smaller	3/8

Section 9.06 SUPPORT:

Bars shall be tied at all intersections except where the spacing is less than twelve inches (12") where alternate intersections shall be tied. Distance from supports shall be by means of ties, hangers, or other approved supports. Metal chairs of approved design shall be used to hold reinforcement from contact with the forms. Metal chairs that are in contact with the exterior surface of the concrete shall be galvanized. When placing concrete directly on a prepared subgrade, reinforcing shall be separated by precast mortar blocks or by other equally suitable devices. The use of stones, pieces of broken brick, metal pipe, or wooden blocks shall not be permitted. Reinforcement in any member shall be placed and then inspected and approved by the Public Works Director/ Engineer before the placement of concrete begins. Concrete placed in violation of this provision may be rejected in which case removal will be required.

Section 9.07 SPLICING:

All splices shall be staggered so that splices in adjacent bars shall be not less than four feet (4') apart, and shall conform to ACI Code Section 12.15.

Section 9.08 PLACING:

All reinforcement bars shall be placed accurately, as shown on the plans, wired at intersections and spaced and supported by means of metal chairs, spacers, hangers or other devices approved by the Inspector. The placing of bars on layers of fresh concrete as the work progresses will not be permitted. The reinforcement shall be securely bound together and rigidly held in the required position. Where splices are made, the base shall be tapped 40 diameters or a minimum of 20 inches and tightly wired together.

Section 9.09 EPOXY COATING:

Sub-section A. <u>Prequalify all Coatings:</u>

Ensure that epoxy coating applicator has Concrete Reinforcing Steel Institute (CRSI) fusion bonded epoxy coating applicator plant certification. Furnish a copy of the Prequalification Test Report to the Public Works Representative/Engineer. Provide an 8-ounce sample of the coating material from each batch.

Sub-section B. <u>Coat Bars as Specified:</u>

The following requirements shall be followed:

- Maintain the coating thickness between 8 and 12 mils.
- Coat bars after bending, unless the fabricator can show that satisfactory results can be obtained by coating before bending
- Reject any bent bars with visible cracks or damage in the coating.

Sub-section C: <u>Handling:</u>

Do not damage the bars or the coating during handling and storage.

- Use systems with padded contact areas when handling coated bars.
- Pad all bundling bands.
- Lift all bundles with strong back, multiple supports, or a platform bridge.
- Do not drop or drag bars.
- Repair damaged bars or coating at no additional cost to the Owner.
- Use patching material per manufacturer's recommendation to repair damaged coating.
- Have the coated bars inspected for damage to the coating after the bars are in place and immediately before concrete placement.
- Repair all visible defects using the specified patching or repair material.

Section 9.10 FIELD CUTTING:

Sub-section A. <u>Cutting and Bending:</u>

All cutting and bending shall be done at the mill or shop unless provisions satisfactory to the Inspector are made for handling this work in the field. The radius of curvature of the bends shall not be less than 4 diameters. All bending shall be done cold. Heating preparatory to bending will not be permitted. All steel shall conform accurately to the dimensions shown on the plans. Saw or shear epoxy-coated bars that are specified to be cut in the field. Do not flame cut.

Sub-section B. <u>Repairing:</u>

Repair the sawed or sheared end using the specified patching or repair material.

Section 9.11 INSPECTION:

Inspection. No concrete shall be placed in any reinforced concrete structure until the steel and its placement have been inspected and approved by the Inspector and he has given permission to proceed with the placing of concrete. Any concrete placed in violation hereof shall be rejected and shall be removed by the contractor at his own expense.

Section 9.12 STORAGE AND PROTECTION:

Storage and Protection. All reinforcement steel shall be stored in such manner as to be protected from the elements. It shall be stored above ground on skids or other supports and shall be protected against corrosion, mechanical injury, and physical damage. No bars that are bent, twisted, kinked or warped shall be used in the work. No bars that have been bent shall be straightened and used in the work.

DIVISION 10: RESTORATION OF SURFACE IMPROVEMENTS

Section 10.01 GENERAL:

This Section defines the requirements for surface removals, trench repair, surface restorations including hardscape and landscape, pavement markings, and moratorium.

The Developer/Contractor shall be responsible for the protection and the restoration or replacement of any improvements existing on public or private property at the start of work or placed there during the progress of the work.

Existing improvements shall include but not be limited to permanent surfacing, curbs, gutters, sidewalks, planted areas, ditches, driveways, culverts, fences, and walls. All improvements shall be reconstructed to equal or better, in all respects, than the existing improvements removed.

Section 10.02 FIELD VERIFICATION OF IMPROVEMENTS:

In submitting a bid, the Developer/Contractor will be deemed to have carefully examined the site of the work and to have acquainted itself with all conditions relating to the protection and restoration of existing improvements. The Public Works Director/Engineer does not guarantee that all improvements are shown on the Drawings, and it shall be the Developer/Contractor's responsibility to provide in its bid for the protection and restoration of all existing improvements whether or not each is provided for specifically on the Drawings and/or Bid Form.

Section 10.03 REMOVAL OF PAVEMENT, SIDEWALKS, CURBS, ETC.:

The pavement, sidewalk, curb and gutter, driveway, etc. shall be cut vertically parallel to the lines forming the trench, or at the nearest full joint, in such a manner as to not cause damage to adjoining pavement, sidewalk, curb and gutter, driveway, etc. The portion to be removed shall be broken up in a manner that will not cause damage to the pavement or concrete outside the limits of the trench; however, any pavement damaged by operations outside the limits of the trench shall be replaced at the Developer/Contractor's expense. Broken paving materials shall be removed immediately from the site of the work.

Section 10.04 MATERIALS:

Materials used for repair or replacement of surface improvements shall be equal to or better than the material removed. Concrete shall comply with Division 8 of these Standard Specifications. Concrete shall be Class AA(AE). The bituminous surface shall be hot-rolled plant mix in accordance with Division 11. Untreated base course shall comply with the requirements of Division 11. The Public Works Director/ Engineer shall take samples of the untreated base course on a random basis. All materials not meeting the tolerance requirements shall be removed from the project and replaced with specification material.

Section 10.05 RESTORING BITUMINOUS, CONCRETE, OR ASPHALT STREET SURFACES:

Between street intersections, unless otherwise ordered by the engineer, the backfilling shall be built up slightly above the surface of the pavement, oiled and maintained in good condition until the contractor is ready to place the new pavement, when the backfilling shall be removed to the subgrade elevation or bottom of the pavement. This work shall be done accurately to the proper elevation and all loose material removed. If any material is removed below the established subgrade elevation, said space shall be filled with similar material to that used for pavement base, at the contractor's expense, after which the new pavement shall be placed according to the City's specifications for the type of pavement that was removed, or such other type as may have been ordered to replace it.

At street intersections a temporary pavement, satisfactory to the Inspector, shall be placed and maintained in good condition until the contractor is ready to place the new pavement, when it shall be removed accurately to the subgrade elevation of the pavement and the new pavement placed according to the City's specifications for the type of pavement that was removed, or such other type of pavement as may have been ordered to replace it.

Such temporary bridges as may be required to properly handle the traffic during the progress of the construction shall be built, maintained and removed at the contractor's expense.

All area affected by excavation will require new asphalt cement to be replaced in a manner as shown in the Standard Drawings according to approved "T" patch to prevent premature joint failure above trench edges. If the trench patch exceeds sixty (60) percent of the existing lane of travel, the lane in its entirety to the crown shall be replaced. This shall be for work that runs parallel with direction of travel exceeding 20 feet in length. The removed asphalt concrete shall be replaced with AC-20, ¾ -Design Mix per APWA Standard Specification Section 32 12 03, PAVING ASPHALT. The patch shall be placed in compliance with Standard Drawings.

Section 10.06 MORATORIUM

This standard applies to new streets, streets that have been reconstructed and overlaid streets. Exceptions may be made at the city's discretion and for emergency situations.
Overlaid Streets: Overlaid streets shall not be cut for one (1) year from the time the street was overlaid.
New Streets: New streets shall not be cut for two (2) years from the time construction.
Reconstructed Streets: Reconstructed streets shall not be cut for two (2) years from the time of reconstruction.

Section 10.07 SPECIAL RESTORATION STANDARD

This standard applies to new streets, streets that have been reconstructed, overlaid, and surface treatments such as slurry seal and chip seal. Streets having a moratorium, which are cut, must be restored to the following requirements:

New Streets: (For five years after moratorium ends) The asphalt surface shall be milled down a minimum depth of two (2) inches fifteen feet each way of the edge of the cut. Milling shall be done in widths equivalent to existing striped traffic lanes. The Engineer reserves the right to require and area length greater than fifteen (15) feet each way of cut or a depth greater than two (2) inches if deemed appropriate to restore the roadway to the original condition. If a fabric was placed prior to asphalt placement or overlay, an approved fabric shall be place prior to asphalt patch.

Reconstructed Streets: (For five years after moratorium ends) The asphalt surface shall be milled down a minimum depth of two (2) inches fifteen feet each way of the edge of the cut. Milling shall be done in widths equivalent to existing striped traffic lanes. The Engineer reserves the right to require and area length greater than fifteen (15) feet each way of cut or a depth greater than two (2) inches if deemed appropriate to restore the roadway to the original condition. If a fabric was placed prior to asphalt placement or overlay, an approved fabric shall be place prior to asphalt patch.

Overlaid Streets: (For three years after moratorium ends) The asphalt surface shall be milled down a minimum depth of two (2) inches fifteen feet each way of the edge of the cut. Milling shall be done in widths equivalent to existing striped traffic lanes. The Engineer reserves the right to require and area length greater than fifteen (15) feet each way of cut or a depth greater than two (2) inches if deemed appropriate to restore the roadway to the original condition. If a fabric was placed prior to asphalt placement or overlay, an approved fabric shall be place prior to asphalt patch.

Slurried Streets: (For one year after placement only) An area not less than (15) fifteen feet, in any direction, from the edge of the cut shall be re-slurried. If slurry area extends partially into a traffic lane, then full lane width must also be slurried.

Section 10.08 FLOWABLE FILL:

The Engineer reserves the option of requiring flowable fill in the trench/pit restoration.

Section 10.09 TESTING:

All compaction testing shall be done by contractor/developer. All densities must meet current specifications.

Section 10.10 TRENCH REPAIR PROCEDURE:

Where trenches are in or cross bituminous asphalt or concrete surfaced roads, traffic lanes, driveways, parking areas, etc., the bituminous or concrete surface shall be cut, restored as quickly as there is sufficient quantity to make it practical, weather permitting, and maintained as follows:

Sub-section A. Before Excavation.

All existing asphalt or concrete surfaces shall be saw-cut or roto-milled to a square edge before excavation.

Sub-section B. Temporary Graded Surface.

Until resurfacing can be done in paved areas a temporary gravel surface shall be placed deep enough to provide a minimum depth as indicated on the Standard Drawings below the bottom of the bituminous surface and shall be brought flush with the paved surface.

The untreated base shall be placed in the trench at the time it is backfilled. Excess material shall be removed from the premises immediately. The Developer/Contractor will maintain the temporary gravel surface until the asphalt is placed.

Sub-section C. Preparation for Paving.

The area over trenches to be resurfaced shall be graded and rolled with a roller weighing not less than 12 tons, or with the rear wheels of a five-yard truck loaded to capacity, until the subgrade is firm and unyielding. Mud or other soft or spongy material shall be removed and the void filled with gravel and rolled and tamped thoroughly in layers not exceeding six inches in thickness. The edges of trenches, which are broken down during the making of subgrade, shall be removed and trimmed neatly before resurfacing.

Before any permanent resurfacing is placed, the Developer/Contractor shall trim the existing paving to clean straight lines as nearly parallel to the centerline of the trench as practicable. Said straight lines shall be thirty feet minimum lengths and no deviations from such lines shall be made except as specifically permitted by the Public Works Representative/ Engineer. If edge of final trench is located within 5’ of the lip of the curb and gutter the entire asphalt between the trench and the curb and gutter shall be removed and replaced.

For Shallow excavation the existing bituminous paving shall be saw cut or roto-milled back a minimum of twenty four inches beyond the limits of any excavation or cave-in along the trench so that the edges of the new paving will rest on at least twenty-four inches (24") of undisturbed soil. For Deeper excavations the existing bituminous paving shall be saw cut or roto-milled back a minimum of thirty six inches beyond the limits of any excavation or cave-in along the trench so that the edges of the new paving will rest on at least thirty-six inches (36") of undisturbed soil.

Before any permanent resurfacing is placed, the exposed subgrade shall be proof rolled by the contractor/ developer with a fully loaded, tandom-axle dump truck or other approved equipment providing an equal subgrade loading. A representative from the city must be present for proof rolling. Unsuitable areas observed at time of proof rolling shall be improved by compaction or by sub-excavating to a depth approved by the Public Works Director/ Engineer and placement of fabric and granular borrow.

Sub-section D. Bituminous Prime Coat.

The bituminous prime coat shall consist of an application of hot bituminous material on a previously prepared base course or other surface to be paved. Prior to the application of the prime coat, an inspection of the area to be coated will be made by the Inspector to determine its fitness to receive the bituminous priming material. That portion of the base course prepared for immediate treatment, if considered excessively dry, shall be lightly sprinkled with water immediately in advance of the application, to assure a uniform spread of the bituminous material.

Bituminous material used for the prime coat shall conform to the requirements for RC-250. Material shall be applied at a temperature of 175 degrees F to 225 degrees F at a rate of 0.3 to 0.4 gallons per square yard by use of a bituminous distributor.

Immediately following the preparation of the base course, the bituminous material shall be applied by means of a bituminous distributor at the temperature previously specified. The priming material shall be so applied that uniform distribution is obtained at all points of the surface to be primed.

Following the application of prime material, the surface shall be allowed to dry without being disturbed, or for such additional period of time as may be necessary to attain penetration into the base course and drying out or evaporation of the volatiles from prime material. The Contractor shall furnish and spread sufficient acceptable sand on all areas which show an excess of bituminous material to effectively blot up and cure the excess.

The primed surface shall be maintained by the Contractor until the succeeding layer of pavement has been placed. During this interval, the Contractor shall protect the primed surface against damage and shall repair all broken spots.

The bituminous distributor shall be so designed and equipped as to distribute the bituminous material uniformly at even heat on variable widths of surface at readily determined and controlled rate with pressure range of 25 to 75 pounds per square inch.

The prime coat shall be applied only when the base course is dry or contains moisture not in excess of that which will permit uniform distribution and the desired penetration. It shall not be applied when atmospheric temperature is below 50 degrees F.

Sub-section E. Tack Coat.
Before placing asphalt cement, an application of tack (Grade CSS-1h per APWA Standard Specification Section 32 12 14, TACK COAT.) MC-70 or MC-250 complying to AASHTO M-82, applied at a rate of 0.15 to 0.20 gallons/square yard.

Sub-section F. Bituminous Surface.

The bituminous surface over trenches shall be restored by standard paving practices to a minimum thickness of four inches (4"). Gradation of aggregate shall conform to the 3/4-inch gradation limits as defined in the Standard Specifications for Roadway Construction.

Sub-section G. Concrete Surface Crossings.

Driveways, Sidewalk or Curb and Gutter. Where a trench is located under private driveways, sidewalk or curb and gutter, the subgrade shall be prepared in the same manner as described for pavement, and the concrete driveway, sidewalk or curb and gutter shall be rebuilt according to the City's specifications on file in the Inspector's office, for the type of driveway, sidewalk or curb and gutter that was removed, or such other type as may have been ordered to replace it.

Repairing Damaged Pavement, Driveway, Sidewalk or Curb and Gutter. If any pavement, concrete driveway, sidewalk, or curb and gutter has been damaged outside the lines of the trench, while trenching, damaged areas shall be removed along straight lines and at right angles, and all cut surfaces shall be vertical, and removal and rebuilding of the damaged portion shall be done by the contractor at his own expense, and to the full satisfaction of the engineer.

Section 10.11 GRAVEL SURFACE:

Where trenches are excavated through gravel-surfaced areas such as roads and shoulders, parking areas, unpaved driveways, etc., the gravel surface shall be restored and maintained as follows:

Sub-section A.

The gravel shall be placed deep enough to provide a minimum of six inches of material.

Sub-section B.

The gravel shall be placed in the trench at the time it is backfilled. The surface shall be maintained by blading, sprinkling, rolling, adding gravel, etc., to maintain a safe, uniform surface. Excess material shall be removed from the premises immediately.

Sub-section C.

Material for use on gravel surfaces shall be obtained from sound, tough, durable gravel or rock meeting the following requirements for gradation:

Passing 1-inch sieve	100%
Passing 1/2-inch sieve	79-91%
Passing No. 4 sieve	49-61%
Passing No. 16 sieve	27-35%
Passing No. 200 sieve	7-11%

Section 10.12 RESTORATION OF SURFACES:

Unless otherwise directed, all street surfacing, curbs, gutters, sidewalks, driveways, or other hard surface that must be removed in the performance of the work shall be restored in kind by the Developer/Contractor in accordance with the Specifications contained herein. Deviation of more than one-fourth inch (1/4") between old and new work or within new construction shall be corrected. Such measurement shall be made from a ten-foot (10') minimum length straight edge. Adjoining surfaces between old and new must be flush.

Minimum trench repair in asphalt surfaced roadways shall be 12 inches of compacted granular roadbase and 4 inches of plant mix asphalt or to match the existing whichever is greater.

Street repairs in the pavement during the warranty period of a new subdivision or other development must be completed prior to the placement of the slurry seal at the end of the warranty period. This includes repair of settled trenches or asphalt patching where curb and gutter has been removed and replaced. All work of this type must be inspected and approved by the City Engineer or his representative.

Section 10.13 PAVEMENT MARKINGS:

The Developer/Contractor shall be responsible for restoration of pavement markings on all roadways. Restoration of pavement markings shall conform to the applicable local and state specifications.

On roadways under UDOT jurisdiction temporary pavement markings shall be provided for any removed or obliterated markings. The temporary markings shall conform to UDOT standards and specifications. The Developer/ Contractor shall coordinate with UDOT for permanent markings.

Section 10.14 MISCELLANEOUS IMPROVEMENTS:

It shall be the Developer/Contractor's responsibility to restore to their original condition all irrigation canals, levees, culverts, gates, fences, drainage ditches, and all such improvements which are cut or disturbed during construction. Topsoil in farming areas or along road edges shall be stored separate from subsoil during pipe trench excavation. Topsoil shall be replaced during backfill operations as nearly as possible to its original condition, thereby assuring suitable soil for reseeding.

Section 10.15 LANDSCAPE RESTORATION:

Areas of new construction that cover or disturb existing landscaped areas with fills and cuts or areas disturbed by construction of retaining walls shall have the landscape restored. Areas that have lawn or flower beds shall be restored including sprinkling systems that might be damaged or relocated because of construction. Lawn covered or removed shall be replaced by sod. If existing landscape area is disturbed, the area should be restored to match the existing landscape. Agricultural fields that have been disturbed shall be re-vegetated to match the disturbed crop. Grass areas shall be restored at a maximum slope of 4:1 and drive way areas shall be restored a maximum slope of 8:1. Any relocation must be accepted by owner.

The topsoil shall be fertile, sandy loam topsoil, obtained from well-drained areas. It shall be without admixture of subsoil or slag and shall be free of stones, lumps, sticks, plants or their roots, toxic substances or other extraneous matter that may be harmful to plant growth and would interfere with future maintenance. Topsoil pH range shall be 5.3 to 6.0.

Section 10.16 CLEANUP:

At the completion of each area of work all equipment, barricades, and similar items shall be removed from the area. All excess material will be removed. Adjacent borrow pits and road shoulders used for storage of excavating materials will be smoothed and returned to its original contour.

DIVISION 11: ROADWAY CONSTRUCTION

Section 11.01 GENERAL:

This Division covers roadway construction. Work shall consist of pulverizing existing asphalt, earthwork, roadway excavation, 6-inch curb walls, 30-inch curb and gutter, 6-foot monolithic curb gutter and sidewalk, and drive approaches. It will also include imported granular borrow, curb face inlet boxes including connection to existing storm drain, subgrade preparation, untreated base course, asphalt surface and raising manholes and valve boxes to grade.

Section 11.02 PULVERIZING:

The Developer/Contractor shall pulverize the existing asphalt and roadbase to a depth of 6 to 8 inches. The limits of the area to be pulverized will be as shown on the improvement drawings. This material may be used for granular borrow or untreated roadbase. The Developer/Contractor has the option of methods he feels will result in the least work and best product in breaking up the existing asphalt, provided that the maximum size for a single piece of asphalt does not exceed 3-inches. Placing, grading and compacting of this material shall comply with the requirements of borrow or roadbase. The existing asphalt edges where the pulverizing terminates shall be saw cut following or prior to being pulverized.

Section 11.03 EARTHWORK:

The earthwork needed for roadway construction shall meet the requirements of Division 7, Earthwork.

Section 11.04 ROADWAY EXCAVATION:

Following completion of the curb and gutter improvements the roadway between lip of gutters shall be excavated to the lines and grades shown on the improvements drawings. Materials not suitable for use as granular borrow or roadbase shall be removed from the road section. Excavation may be done on one-half of the road at a time.

Section 11.05 SUBGRADE PREPARATION:

Sub-base as determined necessary upon analysis of soil characteristics and loads to be imposed on the pavement structure.

This work shall consist of the shaping and compacting of the subgrade in accordance with these specifications and in conformity with the lines, grades, and typical cross sections shown on the Drawings or as established by the Public Works Representative/Engineer.

Following roadway excavation the subgrade shall be proof rolled by running moderate-weight rubber tire-mounted construction equipment uniformly over the surface at least twice. During the rolling operation moisture content of the subgrade layer shall be maintained at not less than 97% or more than 105% of the optimum moisture content. Rolling shall be continued until the entire roadbed is compacted to the specified density to a minimum depth of 8 inches.

Section 11.06 GRANULAR BORROW:

Granular borrow (foundation or roadway) material shall consist of well graded granular bank run natural aggregate material with a maximum size of 3 inches and less than 15% passing a No. 200 sieve. The material shall meet the following gradation:

Sieve Size	Percent Passing
No. 10	50 max.
No. 40	30 max.
No. 200	15 max.

The granular borrow material shall be compacted to not less than 95% maximum dry density as determined by AASHTO T-99. Granular foundation borrow shall be compacted to not less than 95% of maximum dry density as determined by ASTM D-1557. Surfaces shall be true to the established grade with thickness being not less than 1/4-inch from the required layer thickness and with the surface elevation varying not more than 3/8-inch in ten feet from the true profile and cross section.

Section 11.07 GRANULAR BACKFILL BORROW:

Granular backfill borrow shall be free draining natural aggregate material meeting the following gradation:

Sieve Size	Percent Passing
1 - ½ inch	100
1 inch	95-100
½ inch	25-60
No. 4	0-10

Section 11.08 BASE COURSE:

Base for all streets shall consist of hard, durable particles or fragments of stone or gravel, screened or crushed to the required size and grading. The material shall be free from balls of clay, alkali, adobe or other deleterious matter, and shall conform to the following gradation when tested in accordance with AASHTO T-27 or ASTM C 136 and AASHTO T-11 or ASTM C 117.

Base Course Gradation	Percent Passing		
U.S. Sieve Size	1 ½" minus	1" minus	¾" minus
1 ½ inch	100	--	--
1 inch	--	100	--
¾ inch	81-91	--	100
½ inch	67-77	79-91	--
3/8 inch	--	--	78-92
No. 4 sieve (4.75 mm)	43-53	49-61	55-67
No. 16 sieve (1.20 mm)	23-29	27-35	28-38
No. 200 sieve (0.075 mm)	6-10	7-11	7-11

Slag 4133 (3/4 inch minus) and slag 4120 (3/4 inch minus) can be used.

The material shall be deposited and spread in a uniform layer at optimum moisture content, without segregation of size, with such depth that when compacted, the layer will have the required thickness as stated below.
Each layer shall be compacted for the full width and depth. Alternate blading and rolling will be required to provide a smooth, even and uniformly compacted course true to cross section and grade. Places inaccessible to rolling shall be compacted with mechanically operated hand tampers.

The gravel base shall be compacted to not less than 95% maximum dry density as determined by AASHTO T-180. Surfaces shall be true to the established grade with thickness being not less than 1/4-inch from the required layer thickness and with the surface elevation varying not more than 3/8-inch in ten feet from the true profile and cross section.

Section 11.09 BITUMINOUS ASPHALT CEMENT PAVEMENT:

Asphalt cement shall conform to the requirements for asphalt cement, AR-2000, AASHTO M-266 (AR-40) or ASTM D 3381. Mixing temperature shall be not lower than 275 degrees F, nor higher than 325 degrees F.

Mineral aggregate shall consist of coarse aggregate of crushed stone or gravel composed of hard, durable particles, sand, and filler as specified in the following. The portion of the material retained on the No. 4 sieve shall be known

as coarse aggregate and that portion passing a No. 4 sieve shall be known as fine aggregate. The composite material shall be uniformly graded from coarse to fine and shall meet the requirements of the following gradation when tested in accordance with AASHTO T-27 or ASTM C 136. Asphalt concrete shall be as indicated on the Plans, but if not indicated shall be two course plant mix.

The surface course shall consist of a mixture of mineral aggregate and binder. Gradation of aggregate shall conform to the following ¾ inch design mix (APWA 32-12-05):

U.S. Sieve Size	Percent Passing
1/2 inch	90-100
3/8 inch	75-91
No. 4	46-62
No. 16	22-34
No. 50	11-23
No. 200	3-7

At least 70 percent by weight of each size of aggregate included in the coarse aggregate shall consist of particles which have at least one rough, angular surface produced by crushing.

Coarse aggregate shall have a percentage of wear of not more than 50 at 500 revolutions, as determined by AASHTO T-96 or ASTM C 131.

Plasticity index of the aggregate shall be not more than 2 as determined by AASHTO T-90 or ASTM D 431B.

Sand may be added to the crusher or pit run product to supply any deficiency in the 4-sieve size, and filler may be added to supply any deficiency in 200-sieve material. If the aggregate contains an excess of sand, wasting will be required.

Finely powdered lime stones, Portland cement, or other artificially or naturally powdered mineral dust, acceptable to the inspector, may be used for filler.

The Developer/Contractor shall establish a mix gradation, and the amount of bituminous material shall be subject to the approval of the Public Works Director/Engineer and shall meet the requirements of the gradation selected. Regardless of the bituminous content, there shall not be more than 3% voids in the aggregate.

The bituminous material for the surface course shall be AC-10 penetration asphalt cement conforming to the requirements of ASTM M20-60.

Section 11.10 ASPHALT PLACEMENT:

The methods employed in performing the work, all equipment, tools and machinery and other appliances used in handling the materials and executing the work shall be the responsibility of the contractor. The contractor shall make such changes in the methods employed and in the equipment used as are necessary whenever the bituminous mix being produced does not meet the specifications herein established.

Over the dry, dust-free compacted base course the Developer/Contractor shall place and compact a bituminous asphalt cement surface course. The bituminous asphalt cement surface course shall not be placed until the Public Works Director/Engineer has approved the underlying base course. The bituminous asphalt cement surface course shall be placed no less than 7 days following this approval. After 7 days the base course must be reinspected before the surface course is placed.

The bituminous surface course shall be mixed at a mixing plant and spread and compacted on the prepared base in conformance with the lines and dimensions shown on the Drawings and in accordance with these Specifications.

The bituminous mixtures shall be spread with self-propelled mechanical spreading and conditioning equipment capable of distributing at least a 12-foot width. The mixture shall be spread and struck off in such a manner that the

finished surface shall result in a uniform smooth surface. The longitudinal joints in succeeding courses shall be offset at least 6-inches transversely to avoid a vertical joint through more than one course.

The temperature of the bituminous mix shall be between 250 deg. F. and 350 deg. F. when placing.

After the mixture has been spread, the surface shall be rolled in longitudinal direction commencing at the outside edge or lower side and proceeding to the higher side. Each pass of the roller shall overlap the preceding pass at least one-half the width of the roller. Rolling shall continue until 95% of the laboratory density as determined in accordance with ASTM Designation D-1559 for the bituminous mixture being used has been obtained. Density tests shall be done following the procedures of ASTM D-2950.

Rolling operations shall be conducted in such a manner that shoving or distortion will not develop beneath the roller.

The surface of the pavement, after compaction, shall be uniform and true to the established grade. When tested with a ten-foot straight edge placed on the surface of the pavement, at any point, the surface shall not deviate more than one-eighth of an inch from the lower edge of the straight edge. All high and low spots shall be remedied immediately by removing the wearing course material over the affected areas and replacing it with fresh, hot wearing course and surface finish material and immediately compacting it to conform with surrounding area.

It is the responsibility of the Developer/Contractor to control traffic. All traffic shall be kept off the completed surface until the pavement is fully cured as approved by the Public Works Representative/Engineer.

No bituminous surface course shall be placed when the temperature of the air or roadbed is 50 deg. F. or below, and falling, during rainy weather, when the base is wet, or during other unfavorable weather conditions as determined by the Public Works Representative/Engineer.

Section 11.11 ADJUSTING MANHOLES AND VALVE BOXES TO FINAL GRADE:

This section covers the requirements for adjusting manholes and valves to final grade. The adjustment shall be made with cast-iron ring inserts concrete grade rings or cast-in-place concrete collars. Cast-in-place concrete collars shall be constructed after the asphalt surface has been placed.

When concrete rings are used the concrete shall conform to the requirements of Division 8. Concrete shall be Class AA(AE). The concrete mix shall be one part cement to two parts sand or Kent Seal.

Manhole rings shall be set to the grade and slope of the road – shim and grout ring into place.

Manholes and valves placed in asphalt surfacing shall be set in a concrete collar. The collar shall be at least twelve inches (12”) thick and extend at least twelve inches (12”) from the cast iron ring or valve box. The concrete collar shall be constructed such that at the interface with the asphalt, the collar shall be one-half inch (1/2”) lower than the pavement. The cast iron ring or valve box shall be constructed such that it is one-half inch (1/2”) lower than the pavement.

Where manholes are to be raised this is be accomplished by removing the cover and frame and raising the manhole to proper elevation with concrete.

Rings and covers shall be protected during backfilling and compaction of the soil and during the placing or replacing of road surfaces. Any ring or cover loosened from the manhole section shall be reset in cement mortar and any ring or cover damaged or broken shall be replaced by the Developer/Developer/Contractor at its expense.

Section 11.12 SLURRY SEAL COAT

A slurry seal coat is required on roads after one-year of being constructed. Slurry Seal shall consist of a properly proportioned mixture of fine graded aggregate, mineral filler, emulsified asphalt and water mixed and evenly spread as a surface treatment. The cured slurry shall have a homogeneous appearance, fill all cracks, adhere firmly to the surface and have skid resistant texture.

Materials shall be per Section 405 of the Utah Department of Transportation Standard Specifications and as follows:

A. The emulsified asphalt shall meet the current specifications of the American Society of Testing and Materials (ASTM) for cationic emulsified asphalt grade CSS-1hr (ASTM D 2397), grade SS-1hr for anionic emulsified asphalt (ASTM D 977) or quick setting asphalt emulsion (QSH) or (CQS-1hr).
B. Aggregate: The mineral aggregate shall consist of natural or manufactured sand, slag, crushed fines or a combination thereof. Aggregate shall consist of sound, durable, crushed stone or crushed gravel and approved mineral filler. The material shall be free from vegetable matter and other deleterious substances. Aggregates shall be 100% crushed with no rounded particles, volcanic in origin and black in color. The aggregate blend shall have a sand equivalent of not less than forty-five (45). The mineral aggregate shall conform to the quality requirements of ASTM D 1073.
C. Mineral Filler: Mineral filler shall be portland cement, hydrated lime or aluminum sulfate conforming to ASTM D 242.
D. Type I slurry shall be used on trails and parking lots. Type II slurry shall be used on local roads. Type III slurry shall be used on collector and arterial roads.
E. The combined aggregate and mineral filler shall conform to the following gradation (from APWA Section 32 01 13):

AMOUNT PASSING SIEVE SIZE		PERCENT PASSING BY WEIGHT	
SIEVE SIZE	TYPE I	TYPE II	TYPE III
3/8”	--	100	100
No. 4	100	90-100	70-90
No. 8	90-100	65-90	45-70
No. 16	65-90	45-70	28-50
No. 30	40-65	30-50	19-34
No. 50	25-42	18-30	12-28
No. 100	15-30	10-21	7-18
No. 200	10-20	6-15	5-15

F. APPLICATION RATE
The aggregate spread shall be as follows:
Type I: 8 to 12 pounds per square yard
Type II: 12 to 16 pounds per square yard
Type III: 15 to 18 pounds per square yard
Any area found to be less than the indicated minimum pounds shall receive a second application at the contractors expense.
G. Water: All water used with the slurry mixture shall be potable and free from harmful soluble slats.
H. Selection of materials and rate or percentage of each in the slurry mix shall be in accordance with the following:

The contractor shall provide the Engineer with test results from an independent laboratory of materials he intends to use. The tests results shall conform to the requirements of ASTM D 3910-80a and shall be as follows:

1. Consistency Test	4.4.4
2. Set Time	4.4.5
3. Cure Time	4.4.6
4. Wet Track Abrasion Test	4.4.7

The contractor shall include the cost of the above tests in the unit bid price for Asphalt for Slurry Seal Coat. The stockpile shall be completely built before any slurry seal is started.

Engineer may take courtesy samples of the stockpile the first day and every five hundred (500) tons thereafter. If the Contractor elects to build more than one stockpile or conditions require more than one stockpile, each stockpile shall be tested and accepted prior to use. Any material that does not meet specifications shall be corrected or removed from the stockpile area. Corrected material will be retested for acceptance. The Contractor shall receive written acceptance of stockpiles from the Engineer prior to starting slurry work.

I. Equipment. The equipment shall be designed specifically for the blending, mixture and placing of "Slurry Seal" similar and/or equal to the #804 Young Continuous Mix Slurry Machine. The slurry machine shall have been calibrated in advance to ensure proper proportioning of the materials, and all equipment used in the performance of this work shall be maintained in satisfactory working order at all times.

Surface preparation, asphalt material application, cover material application, and surface rolling shall be in accordance with Section 405 of the Utah Department of Transportation Standard Specifications and as follows:

Preparation of Surfaces: Immediately prior to applying the slurry, unsatisfactory areas shall be repaired and the surface shall be cleaned of all oil spots, loose paint, silt spots, vegetation, and other loose and objectionable material. Any standard cleaning method may be used, except that water flushing will not be permitted in areas where considerable cracks are present in the pavement surface. Areas that have been subject to fuel or oil spillage shall be wire-brushed to remove any dirt accumulations. The area shall then be primed with shellac or a synthetic resin to prevent the sealcoat from debonding. The authorized representative of the owner shall give final approval that the surface has been prepared properly.

Application: The surface shall be pre-wetted by fogging ahead of the slurry box. Water shall be applied at a rate of 0.02 to 0.05 gals/yd^2. No free water shall be on the surface of the pavement in front of the slurry box. The slurry mixture shall be of the desired consistency upon deposit on the surface and no additional elements shall be added. A sufficient amount of slurry shall be carried in all parts of the spreader at all times so that a complete coverage is obtained. Overloading of the spreader shall be avoided. No lumping, balling or unmixed aggregate shall be permitted. No segregation of the emulsion and aggregate fines from the coarse shall be permitted. No excessive breaking of emulsion shall be allowed in the spreader box. No streaks, such as those caused by oversized aggregate will be left in the finished pavement.

Joints: Build up on longitudinal and traverse joints shall not be permitted. Slurry seal placed adjacent to concrete pavements or concrete curb and gutter shall be placed with a straight longitudinal edge and shall not overlap the concrete by more than two (2") inches. All edges shall be straight and neat in appearance.

Hand Work: Approved squeegees shall be used to spread slurry in non-accessible areas to slurry mixer. Care should be exercised not to leave an unsightly appearance from handwork.

Curing: Treated areas shall be allowed to cure until such time as the Public Works Director/Engineer permits opening to traffic.

Weather Limitations: No slurry shall be applied, a) when there is any danger that the unfinished product will freeze before it cures completely; b) when the pavement or air temperature is 50°F (10°C) or below and falling, but may be applied when both air and pavement temperature are 45°F (7°C) or above and rising; or c) in the period following a rain while puddles of water remain on the surface to be coated. Slurries that cure by evaporation should not be laid during periods of abnormally high humidity, or when rain may fall within a few hours. Slurries that cure by chemical ejection of water may be laid without regard to existing humidity, even during periods of light rainfall.

Traffic Control: Suitable methods such as barricades, flagmen, pilot cars, etc., shall be used to protect the uncured slurry surface from all types of traffic. Any damage to the uncured slurry will be the responsibility of the contractor. Unless otherwise approved, all traffic control devices are to remain in place at least 24 hours.

Section 11.13 ASPHALT PAVING

All streets shall be surfaced in accordance with the following minimum standards, unless otherwise determined that a thicker section is required based upon a geotechnical evaluation or as specified by the City Engineer. The developer/contractor may be required to submit a pavement design for review on any street. If a pavement design is submitted, all design criteria must be specified, reviewed and approved by the City. Traffic volume, axle loadings and percent trucks may vary greatly from location to location.

Local Streets

A. 10-inch minimum crushed gravel base course over prepared subgrade.

B. 3-inch minimum compacted thickness plant mix asphalt surfacing on streets.

Collector Streets

A. 12-inch minimum crushed gravel base course over prepared subgrade.

B. 4-inch minimum compacted thickness plant mix asphalt surfacing on streets.

Arterial Streets

A. 12-inch minimum crushed gravel base course over prepared subgrade.

B. 6-inch minimum compacted thickness plant mix asphalt surfacing on streets.

Section 11.14 SUPERPAVE

Composition of performance grade asphalt - aggregate mix.

Sub-section A. DEFINITIONS:

A. Asphalt-Aggregate Designator: Alpha-numeric code that indicates nominal maximum size of aggregate, and type and grade of asphalt in aggregate-asphalt mix. For example; "*12.5 PG70-28*" means aggregate asphalt mix shall be composed of an aggregate gradation with a 12.5 mm nominal maximum size and a performance grade asphalt binder designed to perform between temperatures of 70 deg C. and –28 deg C.

B. ESAL (acronym for equivalent single axle load): Number used in designing Pavement thickness. It relates axle load of any mass and number to an equivalent number (18,000 lb).

C. Mean of Deviations: Defined in Section 32 11 23 of the 2007 Utah/APWA Specifications.

D. Nominal Maximum Size: One sieve size larger than first sieve size retaining more than 10 percent of the Sample. The nominal maximum size sieve will retain a minimum of 0 and a maximum of 10 percent of the sample. Maximum size is one sieve size larger than the nominal maximum size.

Sub-section B. <u>SUBMITTALS:</u>

A. Quality Assurance: Submit names, certification levels, and years of experience of testing agency's field technicians that are assigned to the Work. Verify laboratory complies with ASTM standards.

B. Mix Design: Submit.

1. Date of mix design. If older than 365 days, recertify mix design.
2. Paving asphalt source, type, and chemical composition.
3. Nominal maximum size of aggregate.
4. Temperature of mix at plant and in the field for optimum field compaction.
5. Paving asphalt target, dust to asphalt ratio, rut susceptibility, moisture sensitivity (tensile strength), voids in the mineral aggregate (VMA) and voids filled with asphalt (VFA).
6. RAP, mineral filler, antistrip, and recycle agent percentages.
7. Compaction at Nmax.

C. Pre-approved mix design, submit name and address of Supplier.

D. Before changing mix design, submit a new design and give ENGINEER 10 days to evaluate the changes.

E. Source Quality Control Inspections and Testing Report: If requested, submit report describing CONTRACTOR's and Supplier's quality control activities and test results.

Sub-section C. QUALITY ASSURANCE:

A. Use a laboratory that follows and complies with ASTM D 3666.

B. Do not change aggregate source or paving asphalt source without ENGINEER's written approval.

C. Do not use non-complying sources.

Sub-section D. ACCEPTANCE:

A. General:
1. Acceptance is based on one day's production.
B. Installation:
C. Materials:
1. At the Source:
a. Aggregate: Verify gradation prior to the drum mixer or after going through the drier.
b. Paving Asphalt:
c. Mix: 325 deg. F. maximum in transport vehicle.
2. At the Site:
a. Sampling: Two random samples. Location as follows:
1) Behind paver before compaction, or
2) Where sub-lot exhibits non-uniform appearance.
3. At the Laboratory:
a. Air Voids:
1) Basis of evaluation is laboratory compacted samples (not field compacted samples).
2) If test results are not within this Section's limits, options include correction of production procedures or alternate mix design acceptable to ENGINEER.
b. Dust to asphalt ratio.
c. Asphalt Content, Aggregate Gradation: A days production is acceptable if test deviations are within acceptable limits.

Sub-section E. PAVING ASPHALT:

A. Performance Grade Asphalt Binder (PGAB): Section 32 12 03 of the 2007 Utah/APWA Specifications.
1. Blending with polymers or natural asphalts is CONTRACTOR's choice.
2. Do not use acid blends without documentation supporting need.
3. As a rule of thumb, if the two numbers in an asphalt binder designation are added together and are greater than 90, then the binder will most likely contain a polymer or natural asphalt.
B. Recycle Asphalt: Section 32 12 03 of the 2007 Utah/APWA Specifications.

Sub-section F. AGGREGATE:

A. Material: Clean, hard, durable, angular, sound, consisting of crushed stone, crushed gravel, slag, sand, or combination.
B. Source: Use the following requirements to determine suitability of aggregate source and not for project control.
1. Coarse Aggregate:
a. Angularity (fractured faces), ASTM D 5821: At least one fracture as follows.
1) 55 percent minimum if ESALs are less than 0.3 million.
2) 85 percent minimum if ESALs are more than 0.3 million.
b. Hardness (toughness), ASTM C 131: Retained above 2.36 mm sieve.

1) 40 percent maximum if ESALs are less than 0.3 million.
2) 35 percent maximum if ESALs are more than 0.3 million.

c. Flat and Elongated Particles, ASTM D 4791: 20 percent maximum retained above the 9.5 mm sieve has a 3:1 length to width ratio.

2. Fine Aggregate:

a. Angularity, AASHTO T304: 45 percent minimum uncompacted void content.

b. Friable Particles, ASTM C 142: 2 percent maximum by weight passing 4.75 mm sieve.

c. Plasticity, ASTM D 4318: Aggregate passing 4.75 mm sieve is non-plastic even when filler material is added to the aggregate.

1) Liquid limit: Less than 25.
2) Plastic limit: Less than 6.

Sub-section G. <u>ADMIXTURES:</u>

A. Reclaimed Asphalt Pavement (RAP) Aggregate: Restrictions include.
1. 15 percent by weight maximum providing grading, VMA and VFA are met.
2. Greater than 15 percent requires separate mix design.

B. Mineral Filler: ASTM D 242.

C. Recycle Agent: ASTM D 4552.

D. Antistrip: Heat stable, cement slurry, or lime slurry.

Sub-section H. <u>MIX DESIGN:</u>

A. Selection of Materials:
1. Paving Asphalt. Section 32 12 03 of the 2007 Utah/APWA Specifications.
a. PG70-28: Less than 3 million EASLs.
b. PG70-28: 3 million to 30 million EASLs.
2. Aggregate: This Section Article 2.2.

B. Selection of Design Aggregate Structure.
1. Gradation: Maximum particle size is 1/4 compacted lift thickness.
a. Target Gradation Curve must lie within one of the following Master Grading Bands. It must lie below the restricted zone in traffic class IV and traffic class V (Table 3 Section 32 12 05 of the 2007 Utah/APWA Specifications). In all other classes it may lie above, below, or pass through the zone.
b. If acceptable to ENGINEER, use fractionated proportioning to select or adjust gradation.

Table 2 – Master Grading Bands

Sieve Size (mm)		**Aggregate Grade**			
				12.5	**9.5**
Control Sieves	37.5	100.0	-	-	-
	25	90-100	100.0	-	-
	19	<90	90-100	100	-
	12.5	-	<90	90-100	100
	9.5	-	-	<90	90-100
	4.75	-	-	-	<90
	2.36	19-45	23-49	28-58	32-6
	0.075	1-7	2-8	2-10	2-10
Restricted Zone	4.75	39.5	-	-	-
	2.36	29.8-30.8	34.6	39.1	47.2
	1.18	18.1-24.1	22.3-28.3	25.6-31.6	31.6-37.6
	0.6	13.6-17.6	16.7-20.7	19.1-23.1	23.5-27.5
	0.3	11.4	13.7	15.5	18.7

NOTES
(a) Gradation in percent passing by weight, ASTM D 4759.
(b) It is assumed fine and coarse aggregate have same bulk specific gravity.
(c) Percentage of fines passing 0.075 mm control sieve determined by washing per ASTM C 117.

2. Aggregate Blend:
   a. Dry-rodded Unit Weight, ASTM C 29: 75 pounds per cubic foot minimum.
   b. Weight Loss (soundness), ASTM C 88: 16 percent maximum using sodium sulfate.
   c. Clay Content (cleanliness), ASTM D 2419: Sand equivalent value after going through the dryer or prior to the drum mixer.
      1) 45 percent minimum if ESALs are less than 0.3 million.
      2) 60 percent minimum if ESALs are more than 0.3 million.
      The sand equivalent requirement is waived for the RAP aggregate but applies to the remainder of the aggregate blend.

C. Selection of Admixture:
   1. RAP: Adjust pavement asphalt grade to account for RAP binder viscosity.
   2. Cement or Hydrated Lime: Add if mix is moisture sensitive.

D. Selection of Mix Properties: Use AI SP-2 volumetric procedure.
   1. Compaction:

Table 4 – Compaction Parameters			
20 Year design ESALs (Million)	**Ninitial/ % of Gmm**	**Ndesign/ % of Gmm**	**Nmax/ % of Gmm**
Less than 0.3	6/ □□91.5	50 / 96	75 / □□98
0.3 to <3	7 / □□90.5	75 / 96	115 / □□98
3 to <30	8 / □□89	100 / 96	160 / □□98
30 or more	9 / □□89	125 / 98	205 / 98
NOTES (a) N = Number of gyrations. (b) Gmm = maximum specific gravity of mix, ASTM D 2041 (Rice method) (c) Specific gravity of specimen: AASHTO T 312. (d) 20 year design ESALs defined as follows. □□Less than 0.3 = parking lots, light traffic, residential streets □□0.3 to 3 = collector roads (most county roads) □□3 to 90 = city streets, state routes □□30 or more = interstate, weigh stations.			

2. Voids in the mineral aggregate (VMA) at Ndesign:

Nominal Maximum Size	**Voids (VMA)**
37.5 mm	11 to 13 percent
25.0 mm	12 to 14 percent
19.0 mm	13 to 15 percent
12.5 mm	14 to 16 percent
9.5 mm	16 percent minimum

3. Voids filled with asphalt (VFA) at Ndesign:

20 Year Design ESALs (million)	**Voids Filled with Asphalt (VFA)**
Less than 0.3	70 – 80 percent
0.3 to <3	65 – 78 percent
3 to <30	65 – 75 percent
30 or more	65 – 75 percent

a. For 9.5 mm nominal maximum size mixtures, the specified VFA range is 73 percent to76 percent for design traffic levels 3 million ESALs or greater.
b. For 25.0 mm nominal maximum size mixtures, the specified lower limit of the VFA is 67 percent for design traffic levels less than 0.3 million ESALs.
c. For 37.5 mm nominal maximum size mixtures, the specified lower limit of the VFA is 64 percent for all design traffic levels.

4. Dust to Asphalt Ratio:

a. 0.6 to 1.2 if aggregate gradation passes through or over the restricted zone.
b. 0.8 to 1.6 if aggregate gradation passes under the restricted zone.

5. Moisture Sensitivity, ASTM D 4867: Tensile strength ratio less than 0.80 using freeze-thaw conditioning. Test specimen shall be 150 mm in diameter and 95 mm in height and compacted at 7 percent plus or minus 1 percent air voids.

6. Rut Susceptibility, AASHTO T 324: Maximum rut depth is 10 mm at 20,000 passes.

Sub-section I. <u>SOURCE QUALITY CONTROL:</u>

A. General: Collect Samples randomly, ASTM D 3665. Do not change sampling points.
   1. Aggregate sampling, ASTM D 75.
   2. Paving asphalt sampling, ASTM D 140.

B. Asphalt-aggregate mix sampling, ASTM D 979. Test for
   1. Air voids, ASTM D 3203.
   2. Paving asphalt content, ASTM D 6307.
   3. Aggregate gradation, ASTM D 5444.
   4. Tensile strength of bitumen-aggregate mixtures, ASTM D 4867.

C. Mixing Plant: ASTM D 3515.

DIVISION 12: CONCRETE SIDEWALK, CURB AND GUTTER

Section 12.01 GENERAL:

This section covers installation of curb and gutter; sidewalk; combination of curb, gutter and sidewalk; cross drain waterway; drive approaches; handicap ramps; and curb returns. All improvements shall be constructed to the dimensions and thickness shown on the Standard Drawings.

Section 12.02 CONCRETE:

Concrete shall be Class AA(AE) and shall meet all of the requirements of Division 8, Portland Cement Concrete. Under no condition shall the water cement ratio exceed 0.44 by weight. The concrete used for the construction of reinforced concrete drain gutter and concrete curb and gutter shall be air entrained using type II cement and shall be as outlined in Division 8.

The concrete materials and the proportioning, mixing, transporting, placing, protection and curing of the same shall conform to all the applicable requirements of Division 8 of these specifications. Vibration will not be required.

Section 12.03 EXPANSION JOINT MATERIAL

Material for 1/2-inch expansion joints shall be as specified in AASHTO M-153 and AASHTO M-213, and shall be installed with its top approximately 1/4-inch below the concrete surface.

Section 12.04 GRADE:

After construction, gutters shall be checked by flowing water. The Public Works Representative/Public Works Director/Engineer shall be present during the flow test. Removing concrete and replacing to the correct grade shall repair any high spots or depressions (which exceed 0.02 feet). (Minimum flow line grade shall be 0.50 percent.)

Resetting Frames and Covers, etc. Where there are structures existing, within the area of the sidewalk being constructed, such as valve boxes, meter boxes, hydrant boxes, sewer manholes, etc., that require resetting of frames and covers, or the building up or cutting down of the structure to fit the grade of the sidewalk, this work shall be done by and at the expense of the contractor unless otherwise provided in these specifications. Work shall be done to the satisfaction of the engineer.

Section 12.05 EXCAVATION:

Sidewalks: All excavation required for concrete sidewalks and preparation of subgrade shall be made as provided in these specifications and shall include all applicable provisions therein contained. If the sidewalk under construction does not cover the entire area between the curb and the property line, then after the forms have been removed, the depressions along the edges of the sidewalk pavement shall be backfilled with approved material, properly moistened and hand tamped to the satisfaction of the Inspector, and the areas between the sidewalk and the curb and between the sidewalk and the property line shall be finished to a uniform slope, as shown on the plans, with fine material, free from stones and large lumps, and then neatly surfaced with hand rakes. Where the excavation extends into lawns, the sod shall be taken up, carefully preserved and re-laid by the contractor.

Curb and Gutter: Preparation of Subgrade, Base and Backfilling. All excavation and preparation of subgrade and base required for construction of concrete curb and gutter and reinforced concrete shall be as outlined in Division 8 of these specifications, as determined by the engineer. Embankment required under the concrete shall be with approved material compacted to 96% of maximum density. Base material will be required as outlined in Division 11.

All excess material excavated by the Developer/Developer/Contractor shall be removed from the site. Removal of the excavated material shall be done before or immediately after the concrete is placed. The Developer/Contractor shall maintain adequate barricades and other devices to protect the public until excavated material is removed.

Section 12.06 FORMS:

All forms shall be steel, except at curves with a radius smaller than 200 feet. They shall be of a size to match the sections shown on the Drawings. Forms shall be held firmly in place with stakes or other approved means and shall be true to line and grade. The width of the form shall be equal to the full depth of the concrete and the upper edge shall be set accurately to the required elevation of the finished surface.

All forms shall be clean and coated with a light oil to prevent the concrete from adhering to them. Clamps, spreaders and braces shall be used where required to insure rigidity in the forms.

Forms shall not vary from vertical grade by more than 0.02 feet and from horizontal alignment by more than 0.05 feet. All forms shall have smooth even lines in both the horizontal and vertical plane.

Forms for curved sections shall be so constructed and placed that the finish surface of walls and edge of sidewalks, curbs and gutters will not deviate from the arc of the curve.

Section 12.07 SUBGRADE PREPARATION:

After having excavated the area, it shall be compacted immediately in advance of placing the base material and shall be maintained in a suitable condition until the base has been placed.

The developer/Developer/Contractor shall grade to the line and grade approved by the City. No concrete shall be placed without approved cut sheets. The sub-grade shall be properly shaped to conform to the cross section shown on the Standard Drawings, graded and compacted. Compaction shall meet the requirements of Division 7 Earthwork.

Placement of concrete on unsuitable materials shall not be permitted. The subgrade surface shall have a road base foundation as shown on the Standard Drawings. Immediately prior to the placing of concrete, the subgrade shall be compacted using a mechanical foot compactor, with compaction being at least ninety-six percent (96%) density.

Section 12.08 BASE COURSE:

Base Course. The base course shall be composed of natural gravel or crushed gavel placed on the prepared subgrade. The gradation of the aggregate shall be as follows:

	%Passing
U.S. Sieve Size	Gradation Band
1 inch	100
1/2 inch	70-100
No. 8	40-70
No. 16	20-40
No. 50	10-27
No. 200	4-13

The base course shall be placed to a minimum depth as indicated on the Standard Drawings and shall be compacted to 96% of maximum laboratory density as determined by AASHO T-180 Method D. Compaction shall be to the satisfaction of the City Inspector.

Section 12.09 CONSTRUCTION OF CURB AND GUTTER:

Placing, Compacting and Curing. The method of mixing, placing, compacting, finishing and curing, etc., of the concrete shall conform to all applicable requirements of Division 8 of these specifications.

Concrete curb and gutter shall be constructed in conformity with the lines, grades, slopes, form and dimensions shown on the plans or as designated by the engineer. In the construction of combined curb and gutter, the entire structure will be built simultaneously and no joint or line of cleavage shall be made between the curb and the gutter. The curb and gutter shall be constructed monolithically

After concrete has been placed in curb and gutter forms, it shall be consolidated so as to insure a thorough mixture, eliminate air pockets, and create uniform, smooth sides. As the concrete takes its initial set the forms shall be removed and all exposed surfaces shall be float finished, edged and broomed lightly. The curb and gutter shall be constructed to the dimensions shown in the Standard Drawings.

The top and face of the curb and also the top of the apron on combination curb and gutter must be finished true to line and grade and without any noticeable irregularities of surface. No portion of the surface or face of the curb and gutter shall vary more than ¼ inch from a straight edge ten feet in length, placed on the curb parallel to the street center line nor shall any part of the exposed surface present a wavy appearance.

Curb and gutter may be placed by an approved slip form method. The slip form machine equipment shall spread, consolidate, screen and float finish the freshly placed concrete in such a manner that a minimum of hand float finishing will be required to provide a dense and homogeneous concrete section. The concrete shall be distributed uniformly into final position by the machine without delay and competently placed true to line and grade.

Curb and Gutter Contraction Joints. At intervals of ten (10) feet, joints shall be made by inserting 1 ½ inches deep from plates one-eighth (1/8) inch in thickness and shaped to the exact form and dimensions of the curb and gutter. Plates must be smooth and clean. They shall be oiled with mineral oil immediately before using. Any plate that has become warped or damaged shall not be used. They shall be carefully removed as the concrete takes initial set, and any concrete broken out shall be repaired to the satisfaction of the City. The edges of such joints shall be tooled with an edger so as to provide a neat workmanlike appearance.

Expansion joints 1/2-inch thick shall be provided at approximately 50-foot intervals. The expansion joint filler shall be shaped to the exact form and dimensions of the curb and gutter, shall be 1/2-inch in thickness, and shall conform to A.S.T.M. Designation D544-52T, or as last revised, and as approved by the engineer. In cul-de-sac locations expansion joint material shall be provided at start and finish of radius and at intervals not exceeding 30 feet. A full plate must be used at expansion joints and ends of the constructed section, such as at driveways, curved sections and/or where determined by the engineer.

Joint Sealer shall be applied after division plates have been removed and expansion joints have been properly set. All joints shall be sealed in a manner and with material approved by the engineer.

Section 12.10 CONSTRUCTION OF COMBINED CURB WALK COMBO

Concrete curb, gutter and sidewalk may be constructed by first constructing the curb and gutter and then constructing the sidewalk behind it. If this method is used the joint between the back of curb and front edge of sidewalk shall be sealed. The curb and gutter may be placed using stationary forms or the slip method of forming.

Concrete curb, gutter and sidewalk may be constructed at the same time for combination curb, gutter and sidewalk. Stationary forms can be used to place combination curb, gutter and sidewalk or the slip form method can be used if it can be demonstrated that the tolerances specified herein can be met.

Joints in the sidewalk, when placed separately and adjacent to the curb, shall match the contraction and expansion joints in the curb and gutter as well as where the sidewalk abuts a solid object.

Section 12.11 CONSTRUCTION OF SIDEWALK:

All concrete sidewalks shall be constructed to the lines, grades and dimensions as shown on the prepared plans, or as directed otherwise by the engineer. All concrete sidewalks shall be installed by the developer prior to the final warranty inspection. It shall be built four (4) inches thick except at and through driveways. Concrete sidewalk built at and through resident driveways that are used generally for passenger car traffic shall be six (6) inches in thickness through the entire width of driveway. If driveway locations are not known at time of placement than entire lot width shall be placed at minimum thickness of 6 inches. At driveways, other than resident driveways, such as service stations and at all driveways used for commercial and industrial traffic, the thickness of the sidewalk through the entire driveway shall be as shown on the drawing, or as determined by the engineer; but in no case shall the thickness of the concrete walk be less than seven (7) inches.

The concrete shall be placed on the subgrade, prepared as above described, to the full depth of the sidewalk, as shown on the plans, in one course. The full quantity of concrete required shall be deposited in as near its final position as practical in one operation, and the placing shall be completed with shovels. Spades shall be used along the edges to bring the concrete into uniform and complete contact with the forms. Hand tampers approved by the engineer shall be used for compacting. A heavy iron shod straight edge shall be used for striking off the concrete at the proper elevation. Wood floats shall be used for bringing the material to a uniform surface and after the surface has partially set, all edges shall be finished with an approved edging tool having a three-eighths inch radius, and the surface shall then be finished with a wood float or by floating with a steel trowel as directed by the inspector. On steep grades the surface shall be roughened with a light broom finish as directed by the inspector. In no case shall dry cement or a mixture of dry cement and sand be sprinkled on the surface to absorb moisture or hasten hardening.

Sidewalk Expansion Joints. Transverse expansion joints shall be constructed in all concrete sidewalks at intervals of approximately thirty two (32) feet. These joints shall be one-half (1/2) of an inch in thickness and shall run the full width and depth of the sidewalk pavement. Expansion joints shall also be constructed between the sidewalk and curb, between the sidewalk and buildings abutting said sidewalk, around all poles, hydrants, manhole frames and/or other structures coming within or immediately adjacent to the sidewalk area, and at such other points as shown on the plan or as directed by the engineer. The width of expansion joint at the above mentioned locations shall be as shown on the drawing, or as directed by the engineer, except that the expansion joint abutting curb shall be a special joint one (1) inch wide by eight (8) inches deep. All expansion joints shall extend the full depth of the sidewalk pavement being constructed and shall be constructed at right angles to the center line and surface of the sidewalk pavement. A metal holder shall be used to hold the expansion joint rigidly and securely in place during the sidewalk construction.

Sidewalk expansion joint filler to be used shall be prepared resilient, non-extruding joint filler conforming to the requirements of A.S.T.M. specifications, designation D544-52 T, or as last revised, and as approved by the engineer, cut or molded to proper dimensions, and it shall be so placed in relation to surface of sidewalk pavement to allow for pouring of joint sealer compound.

Sidewalk Contraction Joints: In addition to the expansion joint all concrete sidewalks shall be marked transversely with a marking tool, at intervals equal to the width of the sidewalk being built. Each contraction joint shall be finished with an edging tool and shall be cut to a depth of one-quarter (1/4) of the sidewalk slab thickness and an approximate width of 3/16 inch. Additional contraction joints shall be provided as and where shown on the drawing or as directed by the engineer. Ordinary markings shall not be more than one-quarter inch in depth. Saw cuts for control joint purposes shall be strictly prohibited.

Section 12.12 CONCRETE CURB WALL:

Concrete curb wall shall be Class AA(AE) and shall meet all of the requirements of Division 8, Portland Cement Concrete. The curb walls shall be constructed to the dimensions and grades shown on the Standard Drawings or improvement drawings or as determined by the Public Works Representative/Engineer. Reinforcing steel shall meet the requirements of Division 9, Reinforcing Steel. Excavation for and backfill around the curb walls shall meet all the requirements of Division 7, Earthwork.

Section 12.13 CONCRETE CROSS DRAIN WATERWAY:

Concrete cross drain waterway shall be reinforced and constructed in conformity with the lines, grades, slopes, form and dimensions shown on the Standard Drawings. The concrete used shall be the same as described in Division 8. The methods of placing, spading, compacting, finishing and curing, as indicated with curb and gutter shall apply to the construction of the concrete cross drain waterway. Base must be placed under the concrete cross drain waterway as indicated on the Standard Drawings.

Section 12.14 6-INCH CONCRETE DRIVE APPROACH:

The concrete to be used for the drive approach shall be Class AA(AE) and shall meet the requirements of Division 8, Portland Cement Concrete.

When the location of a residential driveway is known, it shall be a minimum of six (6) inches thick. On commercial sites the drive approach shall be a minimum of six (6) inches thick. They shall be constructed to the dimensions shown on the Standard Drawings. The concrete shall be finished as described above for sidewalks.

The driveways shall have a compacted 8-inch untreated base course under them.

Section 12.15 CURB RAMPS:

This section sets guidelines for accessibility to places of public accommodation and commercial facilities by individuals with disabilities. These guidelines are to be applied during the design, construction, and alteration of street construction or public buildings. The construction of curb ramps and drive approaches shall conform to the American Disabilities Accessibility Standards as indicated in the Standard Drawings.

Sub-section A. Curb Ramp Location:

Curb ramps shall be provided wherever an accessible route crosses a curb.

Sub-section B. Curb Ramp Slope:

Slope of curb ramps shall be the least possible slope. The maximum slope of a ramp in new construction shall be 1:12. The maximum rise for any run shall be thirty (30) inches. Transitions from ramps to walks, gutters, or streets shall be flush and free of abrupt changes. Maximum slopes of adjoining gutters, road surface immediately adjacent to the curb ramp, or accessible route shall not exceed 1:20.

Sub-section C. Curb Ramp Width:

The minimum width of a curb ramp shall be forty-eight (48”) inches, exclusive of flared sides.

Sub-section D. Curb Ramp Surface:

Surface of curb ramps shall be stable, firm, and slip resistant.

Sub-section E. Sides of Curb Ramps:

If a curb ramp is located where pedestrians must walk across the ramp, or where it is not protected by hand rails or guardrails, it shall have flared sides: the maximum slope of the flare shall be 1:12 (see Standard Drawings). Curb ramps with returned curbs may be used where pedestrians would not normally walk across the ramp.

Sub-section E. Built up Curb Ramps:

Built-up curb ramps shall be located so that they do not project into vehicular traffic lanes.

Sub-section G. Obstructions:

Curb ramps shall be located or protected to prevent their obstruction by parked vehicles.

Sub-section H. Location of Marked Crossings:

Curb ramps at marked crossings shall be wholly contained within the markings, excluding any flared sides.

Sub-section I. Diagonal Curb Ramps:

If diagonal (or corner type) curb ramps have returned curbs or other well defined edges, such edges shall be parallel to the direction of pedestrian flow. The bottom of diagonal curb ramps shall have a forty-eight (48) inch minimum clear space. If diagonal curb ramps are provided at marked crossings, the forty-eight (48) inch clear space shall be within the markings. If diagonal curb ramps have flared sides, they shall also have

at least a twenty-four (24) inch long segment of straight curb located on each side of the curb ramp and within the marked crossing.

Sub-section J. Islands:

Any raised islands in crossing shall be cut through level with the street or have curb ramps at both sides and a level area at least forty-eight (48) inches long between the curb ramp in the part of the island intersected by the crossing.

Section 12.16 EXCESS CONCRETE:

Wasted Concrete. Retempering concrete that has partly set will not be permitted. Concrete that for any reason has been mixed too wet shall be wasted. Concrete that is partly set shall not be used in the work. Waste concrete shall be disposed of by the contractor in approved washout containment areas .

Section 12.17 CONCRETE FINISHING:

All concrete surfaces not coming in direct contact with the forms shall be struck off with a straight edge to the exact form and elevation required. The surface shall then be finished with a wood float or steel trowel as shown on the plans or as ordered by the inspector, and the edges shall be finished with an approved edging tool.

If any special type of finish is required on any of the concrete included in this section, it shall be indicated on the plans or directed by the city.

Section 12.18 CONCRETE CURING:

All Portland Cement concrete shall be cured by acceptable means and approved by the engineer. The work shall be done in an efficient and systematic manner. The curing period shall not be less than seven (7) days.

Section 12.19 CONCRETE PLACEMENT IN HOT OR COLD WEATHER:
Refer to Division 8: Portland Cement Concrete

Section 12.20 DISCONTINUOUS POUR

If, for any reason, work is discontinued for a period long enough for the concrete to become set or partially set, then a construction joint shall be provided, preferably at a transverse expansion joint, or if that is impracticable, then at a transverse contraction joint. A bulkhead shall be placed between and at right angles to the side forms and at right angles to the surface of the pavement. It shall extend through the full depth of the pavement and the upper edge shall be set flush with the upper edge of the forms. The concrete shall be finished against this bulkhead to the full depth of the pavement and any excess concrete shall be wasted, and all work shall be done to the satisfaction of the inspector before work is stopped.

Section 12.21 CONCRETE PROTECTION AND REPLACEMENT

The contractor shall protect all curb and gutter and drain gutter from damage from traffic and all other causes until accepted by the City. Should the curb and gutter or drain gutter become damaged by weather, traffic, or during the rolling of the street, or from any other cause, it shall be repaired by reconstructing an entire section, by and at the expense of the Contractor and to the satisfaction of the inspector.

Replacement of damaged concrete-- all sidewalks that are broken, cracked, spaulding, or settled shall be replaced prior to any occupancy of structure, and for warranty completion. All replacement shall be done in accordance to new standard installation. Sidewalks placed inconsistent to approved plans shall be replaced unless written approval has been obtained for circumstances allowed by the City Engineer.

Curb replacement. All curb that has settled or broken shall be removed to the next joint and #4 bar drilled a minimum of 6” into existing curb placing a minimum of 3 bars with two in bottom and one in the back. All rebar shall be glued with approved glue for concrete and shall be completed to the satisfaction of the inspector.

Repair of defaced curb- curbs shall be repaired using approved bonding agent and non-shrink grout. Repairs only allowed for chips in curb less than 25% curb depth all others shall require replacement and finished to the satisfaction of the inspector.

DIVISION 13: STORM DRAINS

Section 13.01 GENERAL:

This section covers installation of storm drainpipe, manholes, and curb face inlet boxes. All improvements shall be constructed to the dimension and thickness shown on the Standard Drawings.

Section 13.02 STORM DRAIN CALCULATIONS:

Storm drain calculations will be produced using the rational method using a Farmer Fletcher Storm Distribution. Storm drain design shall follow the 0.2 cfs discharge allowable by Davis County and shall be sized for a 10 year storm without detention, a 50 year storm with minor detention, and a 100 year storm with major detention.

Hydraulic calculations shall be submitted which produce the Composite "C".

Submit copies of the storm intensity/frequency.

Section 13.03 PIPE INSTALLATION:

Installation of pipe shall be in an open trench unless otherwise shown. Trench and backfill shall meet the requirements of Division 2, Trench Excavation and Backfill.

Section 13.04 PIPE:

Pipe and pipe laying shall meet the requirements of Division 4, Concrete Pipe, Division 4A, PVC Plastic Pipe, Division 4B, Polyethylene Corrugated Pipe. Pipe shall be laid with the bells up grade.

All pipe required for the Storm Sewer shall be standard strength, tongue and groove, reinforced concrete culvert pipe. All culvert pipe shall conform to the American Society for Testing Materials Specifications for Reinforced Concrete Culvert Pipe, latest designation D-76, or as provided in the special provisions.

Pipe diameters listed in the bid schedule for which no reinforcing requirements have been determined under ASTM Specifications shall be reinforced as required for the next diameter larger.

Culvert Pipe from 10" in diameter to 36" in diameter shall be at least 36" long. Pipe over 36" in diameter shall be at least as long at the inside diameter.

Section 13.05 STRUCTURES:

(a) All items listed in the bidding schedule as cleanout boxes, inlet boxes and junction boxes shall be designated as structures.

(B) Concrete for all structures shall be as outlined in Division 8.

(c) Upon removal of the forms, all the tie wire holding the forms shall be cut flush with concrete face and any rough or irregular surfaces found to exist shall immediately be repaired to the satisfaction of the Engineer. Surface not exposed to view need not be finished, unless otherwise shown on the plans. Unless otherwise shown on the plans, exposed surfaces of structures shall be finished to conform to the finish of the adjacent concrete. Surfaces over which asphalt paving is to be placed shall be rodded off to the neat lines. Surfaces exposed in concrete paving shall be given a float finish and surfaces exposed in curb and gutter areas shall be finished as prescribed for curb and gutter. An edging tool shall be used on all exposed corners to properly shape and finish the concrete.

Section 13.06 MANHOLES:

Manholes shall meet the requirements of Division 5, Manholes. Where the size of the storm drain does not permit use of manholes, precast or cast-in-place reinforced concrete boxes shall be used. Concrete used in precast or cast-in-place boxes shall be Class AA(AE).

Section 13.07 CONCRETE:

Concrete shall meet the requirements of Division 8, Portland Cement Concrete.

Section 13.08 REINFORCING STEEL:

Reinforcing steel shall meet the requirements of Division 9, Reinforcing Steel.

Section 13.09 STORM DRAIN INLET BOXES:

The concrete to be used for the storm drain inlet boxes shall be Class AA(AE). The boxes shall be built to the dimensions and reinforced as shown on the Standard Drawings. The boxes may be precast or cast-in-place.

Excavation and backfill of the boxes shall meet the requirements of Division 7, Earthwork.

The storm drain inlet grate and frame shall be a D & L Supply I-3517 single unit with curb box with type "V" grate or equal. Grates and frames are to be dipped in cold tar epoxy following fabrication. Grates are to be bicycle safe type grates. All inlets shall be marked "Drains to Stream" Inlet grates where an open face curb will not be used, a D&L supply I-1803 shall be used.

Section 13.10 PIPE CONNECTING INLET BOXES TO EXISTING STORM DRAINS:

The pipe to be used for connecting a new inlet box to an existing storm drain shall be of the same type of pipe as the existing pipe to which it is being connected. Where possible such connections shall be made by installation of a manhole. The Public Works Director/Engineer shall approve connection locations and methods.

Connections to concrete pipe shall be by coring a hole in the pipe and then grouting the connecting pipe to the concrete pipe. Connections to PVC or HDPE pipe shall be as per manufacture's recommendations. These recommendations will be reviewed with the Public Works Director/Engineer prior to construction.

Section 13.11 STORM DRAIN LATERALS:

Where storm drain laterals are required to drain commercial sites, the minimum diameter shall be 8 inch. A two-inch (2") by four-inch (4") by six-foot (6') marker, with the top twelve-inches (12") painted yellow, shall be installed to clearly mark the end of each lateral line

Section 13.12 WATERWAYS:

a) Description. Waterways shall include the construction of box culverts and flumes, the finishing and placing of concrete and metal pipe culverts and other type of culverts specified, in street sections, or in ditches paralleling streets, the construction of cleanout boxes and the furnishing and placing of cleanout frames and covers, and the construction of head gates and diversion works and all other work incidental thereto, in accordance with the plans and these specifications.

(b) Concrete Box Culverts, Flumes and Cleanout Boxes, etc. Concrete waterways shall be constructed from concrete, to the dimensions and at the locations shown on the plans, or according to the stakes set by the Engineer. The provisions of Division 8 under the heading of "Portland Cement Concrete" shall apply to the construction of waterways. Concrete waterways shall be reinforced as shown on the plans.

(c) Reinforced Concrete Pipe. Reinforced concrete pipe shall meet the requirements of "Standard Specifications for Reinforced Concrete Culvert Pipe ASTM Designation C76. (Latest ASTM Designation C76.)

(d) Non-reinforced Concrete Pipe. Shall not be used.

(e) Corrugated Metal Pipe (CMP). Corrugated metal pipe in quality and sizing shall be in compliance with the regulations and design criteria in Handbook of Steel Drainage and Highway Construction Products, published by American Iron and Steel Inst., or as specified on an approved set of plans and shall meet the requirements of AASHO specifications M-36 as approved by Public Works Representative/Engineer.

(f) Placing and Covering. Pipe shall be placed at the locations shown on the plans or as directed by the Engineer and shall be laid true to line and grade. The width of the trench in which the pipe is laid shall be sufficient to permit thorough tamping under the haunches of the pipe. The pipe shall be bedded in an earth foundation of uniform density, and carefully shaped to the proper grade. Where rock or boulders are encountered in the formation it shall be removed and replaced with granular material to a sufficient depth to provide a uniform cushion under the pipe.

Section 13.13 Detention Facilities:

Detention facilities shall meter water at 0.2 cfs per acre. Detention facilities shall be designed as follows:

(a) Side slopes shall be 3:1 maximum.
(b) Designed for 100-year storm or as determined by City Engineer.
(c) Vehicular maintenance access around the entire basin (minimum 10 foot width).
(d) Vehicular access to basin.
(e) Where possible, lot shall provide normal frontage requirements.
(f) Pressurized irrigation system and landscaping compatible with the surrounding area.
(g) Flow through design that eliminates a “wet basin”.
(h) Cross slope within basin shall provide adequate drainage.
(i) Inlet and outlet boxes shall be grated, with extended swale construction extending from outlet structure into the basin to eliminate nuisance flows and water accumulation.
(j) Where possible, detention basins shall be planned as regional basins and incorporated into useable park property or open space.

DIVISION 14: SANITARY SEWER / LAND DRAIN

Section 14.01 GENERAL:

This Division shall include the installation of sanitary sewer and land drain collection facilities. References made herein specifically to sewer shall also refer to land drain.

Section 14.02 CONCRETE SEWER PIPE:

(a) Description. Sanitary sewers shall include the performance of all operations necessary to lay sewer pipe mains, wye branches, individual sewer mains to manholes, test mains for leaks and all incidental work necessary to complete the work in a satisfactory manner.

(b) Sewer Pipe. All pipe for the sanitary sewer mains shall be bell and spigot. The type of pipe the Contractor proposes to install shall have the approval of the City Engineer before work is commenced. No interchanging of type of pipe will be allowed. Pipe shall be rated for sewer and drain use and shall be green for identification.

(c) Non-Reinforced Concrete Sewer Pipe. Non-Reinforced concrete sewer pipe shall conform to Concrete Sewer Pipe ASTM Designation C 14-56.

(d) Reinforced Concrete Sewer Pipe. Reinforced concrete sewer pipe shall conform to the requirements for "Reinforced Concrete Sewer Pipe: ASTM Designation C 75556. Cement used in the pipe shall conform to Type 11A, (the air entraining agent shall be inter-ground at the mill), low alkali cement, conforming to Federal Specifications, 192a, of ASTM Designation C-15C-53.

(e) Length of Pipe. Pipe 36" in diameter and under shall be at least 36" long except specials. Pipe over 36" in diameter shall be at least as long as the inside diameter. The maximum length of pipe shall be 24 feet.

(f) Testing. Random samples of pipe and all fittings and specials such as short radius bands, wyes and toes shall be tested as specified for the type of pipe being used.

(g) Laying. No pipe shall be laid under any circumstances until the pipe has been tested, and the samples selected have satisfactorily passed the requirements. All pipe shall be laid up-grade from structure, unless otherwise expressly permitted by the Engineer, with the bell end of the pipe upgrade. All pipe shall be laid true to line and grade, with a uniform bearing under the full length of the barrel of the pipe, and suitable excavation shall be made to receive the bell of the pipe. All adjustments to grade shall be made by scraping away or tamping earth under the pipe. Wedging or blocking under the hub will not be permitted. As each unit of pipe is laid a sufficient amount of selected backfill materials shall be carefully placed and thoroughly tamped about the lower portion of the pipe to hold it firmly in position, with a minimum bedding material of 3 inches of approved gravel or rock. If adjustment of the position of a length of pipe is required after it has been laid, it shall be removed and rejoined as for a new pipe. When laying is not in progress the ends of the pipe lines shall be kept closed to prevent the entrance of foreign material.

(h) Rubber Gasket Joints. Pipe for rubber gasket joints shall be of the bell and spigot type, detail of the type the Contractor proposes to use shall be furnished and must have the approval of the City engineer before the work is to be commenced. The joint shall be so designed as to provide for self-centering and when assembled, to compress the gasket to form a water tight seal. The pipe design and gasket shall be such that movement of the pipe or hydrostatic pressure cannot displace the gasket. In order to assure water-tightness the clearance between the inner surface of the bell and the outer surface of the spigot, as well as the dimensional tolerances of this annular space, shall be such that the gasket residual deformation is neither less than 20% nor more than 45% when the spigot is seated to the full depth of the bell socket.

(i) Rubber Gaskets. The rubber gasket for use on pipe shall be cured in such a manner that any cross section will be dense, homogeneous, and free from porosity and other imperfections. The gasket shall be extruded or molded to the specific size within a tolerance of plus or minus 1/32 of an inch at any cross section of the gasket. The gasket shall be fabricated from a high-grade tread-type compound. The basic polymer shall be natural rubber, or a copolymer of butadiene-styrene synthetic. The compound shall contain no factice and shall have the following characteristics:

(ii)

Tensile strength, pounds per square inch, minimum 2,300
Elongation at break, percent, minimum 425
Shore Durometer (Type A) 40-60
Absorption of Water, by weight, 2 days at 70 degree C, percent maximum 5
Compression set (constant deflection), percent of original, deflection, maximum 20
Tensile strength after oxygen bomb aging (48 hours strength before aging, minimum) 158 degrees F, 300 per square inch), percent of tensile 80
Increase in Shore durometer hardness after oxygen bomb aging, maximum increase over original Shore Durometer 8
Acetone, extract, percent, maximum 15

The physical properties of the rubber compound shall be determined by tests performed in accordance with appropriate section of Federal Specifications ZZ-R-601a, except for Shore Durometer and compression set. All tests for compression set shall be made in accordance with method B, ASTM Designation D395 for compression set of vulcanized rubber under constant deflection. Tests for Shore Durometer shall be made in accordance with ASTM Designation D676. The Contractor shall furnish certified copies of test reports as evidence of the rubber compound used in all rubber gaskets before any gaskets are used to join pipes. All rubber shall be stored in as cool a place as practicable, preferably at 70 degrees or less, and in no case shall the rubber for joints be stored exposed to the direct rays of the sun. All rubber gaskets shall be stored so as to permit free circulation of air about the rubber.

In all cases during the laying of the pipe extreme care must be taken to see that the rubber gaskets are properly fitted in place and at all times are free from twisting and unusual displacement.

Section 14.03 POLYVINYLCHLORIDE (PVC) SEWER PIPE:

(a) General. This specification covers requirements for PVC pipe and fittings to be furnished for sanitary sewer or land drain.

Pipe and fittings produced to the standards below should be installed in accordance with ASTM recommended practice D-2321, underground installation of flexible thermoplastic sewer pipe. The plastics nomenclature used in the specifications is in accordance with the definitions given in nomenclature D-883, unless otherwise indicated.

(b) Applicable Documents. PVC sewer pipe furnished under this specification shall meet the following ASTM standards: D-256, Impact Strength; D-638, Tensile Strength and Modulus of Elasticity; D-648, Deflection temperature under load of 264 psi; D-1784, Specifications for rigid Poly (VinylChloride) compounds and chlorinated Poly (VinylChloride) compounds; D-3034 (SDR 35) type PSP Poly (VinylChloride) (PVC) sewer pipe and fittings. The requirements of this specification are intended to provide pipe fittings suitable for non-pressure drainage of sewage.

(c) Materials. Basic materials of the pipe and fittings shall be PVC plastic having a self-classification of 12454-B and shall meet the minimum physical properties and chemical resistance of the PVC compound as defined in ASTM D-1784.

(d) Connection Joints. All sizes and classifications of PVC gravity sewer pipe shall have joints utilizing rubber gaskets for sealing. Gaskets shall meet specifications defined in ASTM D-2000-AA820, ASTM 2000-AA625 and ASTM-D-1869.

(e) Workmanship. The pipe and fittings shall be homogeneous throughout and free from visible cracks, holes, foreign inclusions or other injurious defects. The pipe shall be as uniform as commercially practical in color, density, and other physical properties.

(f) Requirements. All materials, dimensions, strengths, qualities, and test requirements shall meet the applicable ASTM requirements. All material used shall be new and shall be protected from any long exposure to the sun.

(g) Inspections. Inspection of the material shall be made as agreed upon by the purchaser and the seller as part of the purchase contract.

(h) Certification. When agreed upon in writing by the purchaser and the seller the certification shall be made the basis of the acceptance of the material. This shall consist of a copy of the manufacturers test report or a statement by the seller, accompanied by a copy of the test results, that the material has been sampled, tested, and inspected in accordance with the provisions of the specification. Each certification so furnished shall be signed by an authorized agent of the seller or manufacturer. Copies will be furnished to the City.

(i) Marking. Pipes in compliance with this standard shall be clearly marked at intervals of five feet (5') or less. The marking on SDR-35 shall be: (1) Mfg's Quality; (2) Nominal Pipe Size; (3) PVC 12454-B; (4) SDR-(Number); (5) PSP Sewer Pipe; (6) Appropriate ASTM Number; (7) Extrusion Code

Section 14.04 SEWER APPURTENANCES

(a) Testing of Gravity Sewer Lines. Gravity sewer lines shall show not more than two hundred (200) gallons infiltration per day, per mile of pipe, per inch nominal diameter. In areas where the ground water level is above the top of the pipe for the entire length of the sewer being tested, the infiltration shall be measured into the pipe to determine if it meets infiltration requirements. In areas where the ground water level is below the top of the pipe the Contractor shall perform an exfiltration or leakage test to provide the City an indication of the condition of the completed system. After capping and blocking all wyes or tees, the pipe between successive manholes shall be filled with water, including the upstream manholes, to not less than four feet (4') nor more than eight feet (8') above the lowest point of the sewer section being tested. The amount of water level shall be measured, and it shall not exceed a rate of two hundred (200) gallons exfiltration per day, per mile of pipe, per inch nominal diameter. Any one individual section may exceed the rate by one and one-half (1 1/2) times if the total length does not exceed the above rate. The program of testing must be mutually determined by the Engineer and the Contractor. The Contractor shall furnish all labor, tools, and equipment necessary to make the tests and to perform any work incidental thereto. The Contractor shall take all necessary precautions to prevent any joints from separating, or other damage to the system while the pipelines or their appurtenances are being tested. He shall, at his own expense, correct any excess leakage and repair any damage to the pipe, and its appurtenances or to any structures indicated by or resulting from these tests. If any section tested fails the test, it shall be repaired or replaced and re-tested at the Contractor's expense, until the measured leakage is within the allowable limits. Prior to the issuance of building permits and preceding the final warranty release of contingency improvement funding the City will require the Developer or his selected contractor to perform a flush cleaning and CCTV video inspection of the sanitary sewer pipes to confirm pipe workmanship and perpetuation of City and American Society of Testing and Materials (ASTM) design and construction requirements. The City may require follow-up video inspections to confirm necessary repairs have been completed from previous inspections. (Ord 04-23)

(b) Deflection and Air Testing of Sewer Lines. The air test shall be made by attaching an air compressor testing apparatus to any suitable opening, and after closing all other inlets and outlets to the system, forcing air into the system until there is a uniform gauge pressure of five (5) pounds per square inch (34.5kPa) or sufficient to balance a column of mercury ten (10 inches (254 mm) in height. The pressure shall be held without introducing additional air for a period of at least fifteen minutes. In addition to the air test of the sewer line, a deflection test will also be required.. Maximum tolerance of grade deviation shall be ½ inch not to exceed 10 feet in length.

(c) Wye Branches. Wye branches or junctions for house connections shall be four (4") inches in diameter, and shall be installed in the sewer at such locations as the Engineer may direct. Wye branches shall be elevated so that the flow line of the wye is above the centerline of the pipe. Located as provided in plans and details herein. Each wye, not used in connecting present laterals, shall be sealed by means of a suitable plug of the same material as the pipe and sealed with joint compound one-fourth (1/4) inch deep over the plug.

(d) Manholes.

(1) General. This item shall consist of the construction or installation of concrete manholes of the various types and diameters shown on the plans and at the designated locations. The item shall include: Ring and cover, steps, and all other incidentals necessary to fully complete the manholes.

(2) Precast Manholes. Precast manholes shall consist of sections of rings of tongue and grooved reinforced concrete pipe on a cast in place foundation. Both circular and conical sections shall meet the requirements of "Reinforced Concrete Sewer Pipe (ASTM Specifications C75)."

Approved eccentric manholes with rungs will be accepted. Concentric manholes will not be accepted.

The precast base section shall be recessed on the bottom edge to receive the pipe entering the manhole. The base section shall extend at least two inches into the concrete of the floor. When practical the base section shall be set in position before the floor is poured; in any case the base section shall be imbedded in the floor before the concrete has taken its initial set.

Joints between sections shall be set in (a) cement grout, or (b) asphaltic sewer joint compound. Joints shall be water tight.

(3) Manhole Covers. The Contractor will furnish and install the cast iron frame and cover shown on the plans as a part of the manhole.

(4) Castings, Quality of Metal. All castings shall be made of good quality cast iron, strong, tough, straight grained and free from flaws, cracks, blow holes or other defects and of exact form and dimensions shown on the plans. They shall be evenly and firmly set and imbedded as to afford the chance of any movement. The seats and bearings of all frames and covers shall be machine faced and shall fit evenly and firmly and so made as to be interchangeable. Iron shall conform to "Standard Specifications for Gray Iron Castings" ASTM Specification A 48-48 or Class 30.

(5) Grade. Necessary adjustment to bring the cover to finished street grade shall be required and a concrete collar provided that is 12 inches in depth and 12 inches beyond the collar edge.

(6) Manhole Ladders. Manhole ladder steps as shown on manhole plans shall be formed from 3/4" mild steel bar coated with polyethylene or cast iron rungs.

(7) Stubs in Manholes. Shall be flexible rubber boots with stainless steel straps

(8) Revisions to Existing Manholes. All work required to revise or modify existing manholes, in connection with this project, as shown on the plans, or as directed by the Engineer, necessary to complete the project shall be done by the Contractor and no extra compensation shall be allowed for this work. This work shall include such incidentals as raising manhole floors, providing drop type inverts, new invert openings, etc.

(e) Service Lines. Any sewer laterals that may be extended beyond the branch in the main by the Contractor during the construction shall be subject to all the requirements of these specifications for the construction of the main line sewer. Cementing of joints will be allowed.

The Contractor shall be fully responsible for any leaks in the sewer laterals, to the same extent as if such leaks were in the sewer main.

Sewer service lines shall be connected into the main line with a tee or other fitting manufactured for this purpose. The lateral shall be placed on a ¼ inch per foot minimum slope for 4 inch and shall have cleanouts every 50 feet, at all changes in direction greater than 45° and at drop connections. In the event the main sewer is deeper than required to connect the service line at ¼ inch per foot slope, the service line shall be taken off on a 45° and then flattened to the minimum slope to the house or user. Service lines for residential connections shall be 4-inch. The service line will be installed according to plans and details herein. Lateral piping for connections shall be installed to property line and identified green in color for inspection and shall be provided with a water tight cap or plug and a marker at the end that extends to grade for location purposes.

For all piping located in water at time of excavation a pump shall be provided to allow for proper support and laying of said pipe.

(f) Workmanship. The Contractor, developer, home builder or others responsible for the work shall provide adequate means, acceptable to the City Inspector, to prevent the entrance of foreign materials into the sewer lines via the manholes and service laterals.

Unless otherwise approved the following means of protections shall be used:

Before work is started on street grading and paving jobs where there is a possibility of manhole rings and covers being displaced by equipment, the floor of the manhole shall be completely covered with wood planks, adequately secured to prevent displacement. Individual planks shall have a width greater than the diameter of the sewer pipe. Planking shall remain in place during the life of the job. Upon completion of the work any foreign material that may have entered the manhole shall be removed before the planking is removed.

On resurfacing jobs where it is required that manhole covers be adjusted to new grade, a canvas apron, properly supported or anchored may be used in lieu of wood planking. In every case such apron or planking shall be in place before the work is started and shall not be removed until the work of adjusting the manhole has been completed.

(g) Final Sewer Cleaning and Inspection. Prior to final acceptance, all parts of the system shall be completely finished and cleaned by the developer. All accumulated construction debris, rocks, gravel, and other foreign material shall be removed from the sewer system at or near the closest downstream manhole. If necessary the Contractor shall use mechanical rodding or bucketing equipment. The City Public Works Department shall complete a smoke test of the system to locate cross connections, illegal connections and infiltration points. The City shall notice the home builder or developer of any illegal connections to the sewer system. The homebuilder shall undertake correction of cross connections, illegal connections, or infiltrations. This shall include cleaning of the cross-connected service pipeline acceptable to the City Public Works.

DIVISION 15: CASINGS/BORINGS

Section 15.01 GENERAL:

This division defines the materials and construction requirements for steel casings under canals, railroad tracks, highways and Interstates. All construction operations shall be subject to the approval of the canal, Railroad Company or UDOT whose facility is being crossed. The Developer/Contractor shall make application to and secure permission from the canal, Railroad Company or UDOT before commencing work within the right-of-way. The Developer/Contractor shall provide all insurance and the services of all watchmen and flagmen required by the Railroad Company or UDOT. The Developer/Contractor will pay UDOT for their inspection services.

Section 15.02 MATERIALS:

The pipe shall be welded steel pipe conforming to ASTM Designation A-139, Grade A. Pipe wall thickness shall be a minimum of point three seven five inches (0.375") or as shown on the Drawings.

Section 15.03 CONSTRUCTION METHODS:

The steel pipe casing shall be jacked under the railroad tracks, highway or Interstate using methods submitted to the Public Works Director/Engineer for review by the Public Works Representative/Engineer. Circular pipe joints shall be field welded as the jacking process progresses. The pipe interior shall be completely excavated and cleaned prior to installation of the carrier pipe.

Steel pipe casing shall be installed by open cut under canals. These installations shall be as per details approved by the canal company.

All required approach trenches or working pits shall be excavated and shored as defined in Division 2, Trench Excavation and Backfill. Provisions shall be made for a drain sump in one corner of the working pit to allow for the accumulation and pumping of seepage water, if ground water is expected to be encountered.

Section 15.04 LINE AND GRADE:

Casings shall be installed accurately to the line and grade shown on the Drawings. Casings shall be installed to grade with sufficient accuracy to permit installation of the carrier pipe to the design grade shown on the Drawings or to the cover depth required. The Developer's Public Works Director/Engineer will provide base lines and bench marks at each casing location. Instrument checks of the line and grade shall be made by the Developer/Contractor at intervals sufficient to maintain the casing on line and grade.

Section 15.05 CARRIER PIPE INSTALLATION THROUGH CASINGS:

All carrier pipe to be HDPE fusion welded pipe or equal unless approved by Public Works Director/Engineer. The carrier pipe shall be installed to the grade shown on the Drawings. Casing insulators or chocks shall be fastened to the carrier pipe as per the manufacturer's recommendations. For ductile iron pipe or PVC pipe, insulators shall be installed within one foot on each side of the bell and one in the center of the joint when 18' or 20' long joints are used. Metal components of the insulators or chocks shall be manufactured from 14 Ga. Steel, hot rolled and pickled and plastic coated or Type 304(18-8) stainless steel. The liner shall be polyvinyl chloride or Neoprene Rubber with antioxidant and antiozonant properties for extended service life. Runners shall be glass-reinforced plastic or UHMW polyethylene. Runners shall have high abrasion resistance and a low friction coefficient. Following installation of the carrier pipe the annular space between the inside of the casing and the outside of the carrier pipe shall be blown full of sand. The sanding operation shall be carried out such that sand is placed in the center of the casing first and the annular space filled as the placing pipe is withdrawn. The Developer/Contractor shall not be allowed to wash sand in from the end of the casing.

Section 15.05 Directional Borings

Directional Boring- Directional boring shall be done in accordance to the following guidelines

a. allowed piping:
   i. non-pressurized - HDPE SDR17 or better grade
      - DR18
   ii. pressurized - HDPE SDR11 or better grade
      Certlock C900/RJ, DR14

b. installation: HDPE pipe must be fused by certified installer certified through approved agency and approved by Syracuse City for all pressurized systems. Gravity fed lines shall be placed to designated grade and elevations as provided by engineer, and shall require video of line for inspection and shall not have deviations in excess of ¾". Deviations in excess will require pipe to be excavated and corrected at cost of contractor.

c. Utility Clearances: all pipe installed through directional boring shall maintain 24" clearance to all utilities. Pot holing of utilities shall be required to verify clearances as may be directed by Inspector and or Engineer. The frequency of these locations shall be at any intersecting location. If piping is parallel to utility then pot holing shall occur no more than at 100 foot intervals. In cases where 24" cannot be maintained for clearance an approved buffer shall be provided to protect existing utilities. This buffer shall be approved prior to installation by the Inspector and/or Engineer.

d. Log book. A log book shall be maintained of all work performed by the contractor and shall include depth, length and any deviation from approved installation guidelines established by Engineer.

e. Gravity lines. Camera of all gravity lines shall be provided for full length and shall be performed by third party agency. Video of line shall be provided on DVD disk or other PC format. No videos on VHS will be accepted. All submission of data shall be directed to the community development department or city inspector and clearly identified to the project or development at time of submittal.

DIVISION 16: POWER, GAS, TELEPHONE AND T.V. CABLE

Section 16.01 POWER:

All power improvements shall comply with the current Utah Power Department Standards. The standard location for power shall be one-foot behind sidewalk line within the 10' utility easement. Where the power is required to cross the right-of-way a conduit with a minimum 4" diameter conduit shall be installed. This conduit shall extend at least 5' beyond curb and gutter and/or sidewalk. The minimum depth of cover for power shall be 24" for secondary power and 32" for primary power.

Section 16.02 GAS:

All gas improvements shall comply with the standards of the gas provider as a minimum. The standard location for gas shall be 3 feet behind curb and gutter or sidewalk within the 10' utility easement. The depth of cover for gas shall be 18-30 inches.

Section 16.03 TELEPHONE:

All telephone improvements shall comply with standards of the telephone provider as a minimum. The standard location for telephone shall be joint trenched with the power line. Where the telephone is required to cross the right-of-way a conduit with a minimum 4" diameter conduit shall be installed. This conduit shall extend at least 5' behind curb and gutter and/or sidewalk. The depth of cover for phone shall be 18-30".

Section 16.04 T.V. CABLE:

All T.V. cable improvements shall comply with standards of the cable T.V. provider as a minimum. The standard location for cable T.V. may be joint trenched with the power and telephone and located six feet beyond the property line within the 10' utility easement. Where the cable T.V. is required to cross the right-of-way a conduit with a minimum 2" diameter conduit shall be installed. This conduit shall extend at least 5' behind the right-of-way line. The depth of cover for cable shall be 18-30".

Section 16.05 FIBER OPTIC:

All fiber optic improvements shall comply with standards of the fiber optic provider as a minimum. All fiber optic lines shall be encased in concrete. The concrete thickness shall be 1-1/2 times the diameter of the conduit. The concrete shall be placed on the top and sides of the conduit. The concrete shall be a minimum 500 psi. The depth of cover for fiber optic shall be 36".

DIVISION 17: SURVEY

Section 17.01 GENERAL:

This division covers surveying issues as they relate to development within Syracuse City. All surveying activities and products shall comply with this division, any existing Davis County regulations, Utah Code Title 17 Chapter 23,

Section 17.02 MONUMENTATION:

Each and every corner on the boundaries of the parcel or tract of land being surveyed should be monumented. Where monuments exist but are not of a durable material they should be replaced. In such cases where the placement of a required monument at its proper location is impractical, it is permissible to set a reference monument close by the point, and if such reference monument is set its location shall be properly shown on the plat of survey. When conditions warrant setting a monument on an offset, the location shall be selected so the monument lies on a line of the survey or on the prolongation of such line. Offsets should not be in fractional feet unless a physical obstruction affects their location.

Artificial monuments should be constructed of durable material capable of being detected by commonly used magnetic locators. Where practical, monuments shall be solid and substantially free from movement. These monuments shall have affixed thereto a cap or other device bearing the registration number of the surveyor in responsible charge, or the regular business name or the governmental agency legibly stamped or imprinted thereon. Unless extenuating circumstances dictate, the minimum size monument should be not less than 5/8 inch in diameter, the minimum length should be 24 inches.

Following the construction of the curb, a nail shall be permanently placed in the curb at the point of intersection of the extension of the lot line with the curb line.

Section 17.03 GRAPHIC REPRESENTATION OF LAND SURVEYS:

This section covers the graphical representation that is to be submitted by the surveyor.

Sub-Section A Plats of Survey

Surveyors should:

1. complete and file plats or certificates with proper local authority, in accordance with Utah Code 17-23-17 or other local regulations,

2. prepare survey records on stable, durable media capable of reproduction, recording, digitizing, and permanent storage,

3. clearly and understandably portray conflicting monuments or property lines showing gaps or overlaps with adjoining properties and inform clients, of their existence,

4. show actual measured values on plats and certificates, to enable their future retracement. Values from the record should be shown in record units for comparison,

5. clearly indicate lines of occupation, and the extent of any encroachment relative to parcel boundaries, and

6. label adjoining properties with owners name if known, include reference to documents of record.

Sub-Section B Survey Certification

Surveyors should:

1. identify the record legal descriptions of the parcels being surveyed giving reference to the recordation information (i.e. Book, Page and Entry Number) of the document relied upon for the record description,

2. when establishing new boundaries not previously of record, include reference to the parent parcel description together with the description of the created parcel. Include a description of the remainder of the parent parcel if known, and

3. when preparing a composite description of several surveyed parcels, identify the record legal descriptions of the parcels (See paragraph 1 above) and include a statement of purpose for the composite in the narrative of the survey.

Sub-Section C Survey Narrative

Surveyors should:

1. explain and identify the purpose of the survey and its intended use such as, construction of improvements, determination of encroachments, transfer of ownership, parcel division, etc.

2. clearly indicate two existing monumented fixed points of reference relied upon for the basis of bearings defining the orientation for the lines of the survey,

3. include a reference to documents of record relied upon for preparation of the survey, and give a physical description of the monuments found and used.

4. include methods of interpretation of deed elements and physical evidence upon which conclusions were reached, and

5. indicate the theory of location for corners utilized to resolve record conflicts and to draw conclusions in accordance with law or precedence.

Sub-Section D Legal Descriptions

Surveyors should:

1. include a sufficient caption, body, and where applicable, augmenting and qualifying clauses when preparing a legal description,

2. state clearly the relationship between the real property being described and the survey control or basis of unique location,

3. state clearly the basis of bearings or language which otherwise makes definite the method of direction and orientation for the lines of the subject property being described and the survey control related thereto when applicable,

4. make full and complete citation to maps, plats, documents, and other matters of record, fact or pertinence, which are intended to be incorporated into and made a part of the legal description by reference thereto,

5. call for complete and detailed descriptions of physical monuments, both natural and artificial, such as to facilitate future recovery and to enable positive identification,

6. when appropriate, incorporate either directly or by citation, sufficient data to enable a check of mathematical closure for the subject property being described, and

7. affix their validated land surveyors seal to the legal description.

Section 17.04 CORNER RECORDATION

Surveyors should:

1. file a written record in accordance with Utah Code 17-23-17.5 for each government corner used as control unless the record currently reflects the existing conditions,

2. set a monument of durable quality witnessed by at least four reference monuments when rehabilitating a government corner,

3. set a witness monument wherever the nature of the ground will not allow the setting of a monument at the exact corner,

4. carefully describe the monument and all references including their bearings and distances,

5. include the state plane coordinates of the corner pursuant to Utah Code 57-10, Utah Coordinate System, if known, and

6. utilize a form which portrays the information in a clear fashion as suggested on the attached monument recordation form.

DIVISION 18: STREET AND TRAIL

Section 18.01 GENERAL

Traditional neighborhood design is utilized as the basis for street layout and design standards. This planning and design concept is used because it creates streets that provide multiple transportation options, focuses on a safe environment for all users, treats streets as public spaces, and enhances the livability of the neighborhoods.

Section 18.02 CONDITIONS TO BE CONSIDERED FOR STREET DESIGN

The following conditions (existing and projected) should be considered in order to design each street.

- The volume of pedestrian, bicycle and motor vehicle traffic each day and at peak hours;
- The speeds of motor vehicles and number bicycles and pedestrians along the street;
- The mix of pedestrian, bicycle and motor vehicle traffic (including percentage of large trucks);
- The zoning and surrounding future land uses (assess pedestrian, bicycle and transit generators and attractors such as schools, shopping areas, community buildings, parks, churches and gathering places);
- The natural features of the area such as slope, mature trees, creeks, wetlands, etc.;
- The adjacent building setbacks with respect to the street;
- Whether adjacent properties will be serviced directly from the street, or from alleys; and
- The function of the street and relation to the surrounding street network.

This planning and design concept is used because it creates streets that provide multiple transportation options, focuses on a safe environment for all users, treats streets as public spaces, and enhances the livability of the neighborhoods.

Section 18. 03 STREET DESIGN CONSIDERATIONS

All streets in Syracuse should be designed using the following assumptions:

- All designs encourage pedestrian and bicycle travel.
- Neighborhood streets (Neighborhood Collectors and Neighborhood Streets) designed for 20 to 30 mile-per-hour (mph).
- All new streets are paved.
- All streets have standard vertical, non-mountable curbs.
- Park strips and sidewalk widths do not include the curb.
- All streets have park strips and sidewalks where designated.
- In certain situations, where the physical features of the land create severe constraints, or natural features need to be preserved, exceptions may be made.
- Landscaped park strips.
- Garages are set back from the sidewalk so parked vehicles are clear of sidewalks.

Section 18.04 STREET TREES

Street trees are encouraged to be planted on neighborhood streets to create attractive and healthy neighborhood environments, and to enhance the image of a street as a place with which residents can identify. Trees planted in the park strips, along the sidewalk, or anywhere in the public right-of-way must be from the City of Syracuse's list of acceptable trees.

Section 18.05 CURBS

Curbs should be a 2' ft 6" inch standard, vertical 6" inch high curb on all improved streets.

Section 18.06 PRESERVING NATURAL FEATURES

Streets shall be located in a manner which preserves natural features to the greatest extent feasible.

1. Whenever possible, street alignments shall follow natural contours and features so that visual and physical access to the natural feature is possible.

2. Streets shall be situated between natural features, such as creeks, mature trees, drainages, open spaces, and individual parcels in order to appropriately incorporate such significant neighborhood features.

Section 18.07 SAFETY

In any design situation, no topic is more important than human safety. Street design situations require the consideration of many, sometimes competing elements to make the street safe for all modes of travel. In street design, the standards that should be applied and questions that should be asked include the following:

- What actions may reasonably be expected of motorists and non-motorists along the street?
- Given a foreseeable but infrequent problem, what are the ramifications on other users of the street if the problem is specially addressed in the design?
- When balancing conflicting matters, the frequency of conflict between the two or more competing elements and the resulting frequency of difficulties that will be experienced should be documented.
- What are the physical consequences of a particular design element or decision?
- If in doubt, favor the non-motorist and accommodate the motorist.

Section 18.08 RESIDENTIAL NEIGHBORHOOD STREET STANDARDS

Neighborhood streets have different functions. Some serve as a collector providing access to neighborhood cores, gather traffic from various parts of the neighborhood, and distribute it to the major street system. Some serve as access streets to the collectors having minimal traffic and very little through traffic. Different configurations are indicated on the Standard Drawings.

Section 18.09 HILLSIDE STREETS AND NATURAL AREAS

Occasionally, streets are constructed in locations with significant natural features, which require special accommodations such as in hilly areas, near creeks, rock outcroppings, drainages, or wetlands. In these cases, specific considerations should be made to minimize negative impacts.

Section 18.10 NON-MOTORIZED TRAIL

Multi-use paths are off-street facilities used primarily for walking and bicycling. These paths can be relatively short connections between neighborhoods (neighborhood connections), or longer paths adjacent to rivers, creeks, railroad tracks and open space. The trail shall have a minimum 14-foot wide right-of-way with a 10-foot wide paved surface and shall be constructed as indicated in the Standard Drawings.

Section 18.11 EQUESTRIAN TRAIL

Equestrian trails shall have a minimum of a 10 foot wide right-of-way with a minimum 6-foot wide tread situated inside the right-of-way. The equestrian trail shall be constructed using compacted roadbase at a minimum 6-inch thickness or foundation rock through wet areas as indicated in the Standard Drawings. Minimum clearance shall be 10 foot vertical, 3 foot horizontal from a wall or fence, and 4 foot horizontal from a bicycle lane, and 6 foot from vehicular travel lanes.

Section 18.12 BIKE LANES

Bike Lanes shall conform to AASHTO standards and shall be installed as indicated in the Standard Drawings. Minimum width of a bike lane shall be 4-feet. Where on-street parking is allowed, a five foot wide bike lane is preferred. Pavement making and signs shall comply with current MUTCD standards.

DIVISION 19: ROADWAY LIGHTING

Section 19.01 GENERAL

All outdoor artificial street illuminating devices shall be installed in conformance with the provisions of this section and applicable provisions of the Zoning Ordinance, Subdivision Ordinance, and the current Electric and Electric Safety Codes adopted by the state of Utah. The spacing and arrangement of streetlights will be designed during the preliminary plat or site plan review phases of a development and shall be a minimum of one light per every 800 feet of roadway, every 400 feet of cul-de-sac depth and at every roadway intersection.

Section 19.02 APPROVED MATERIALS & METHODS OF INSTALLATION

The provisions of this section are to prevent the use of any material or method of installation not specifically prescribed by this section. The City Council must approve any proposed alternatives.

Sub-section A. Type and Style of Lights:
Street lights shall be purchased by the developer and may be "GraneVille" (series 2) with a 12-foot Salem pole.

Sub-section B. Lamp Source:
High Pressure Sodium is the lamp source that will be utilized throughout the City for all roadway lighting.

Sub-section C. Deviations:
Any material or method of installation not specifically prescribed in this section will be evaluated by the City Council as stated above, for approval based on the following criteria:

(1) It provides equivalence to the applicable specific requirements of this section.

(2) It is otherwise satisfactory in complying with the intent of this section.

(3) The plans, and variants to this section for proposed lighting schemes, will be submitted to the Community Development Department for approval, and shall be sufficiently complete, with all variants from this section noted, to enable the City Council to readily determine whether compliance with the intent of this section will be secured.

Sub-section D. Variances:
Any person desiring to install an outdoor lighting fixture in violation of this section may apply to the City Council with recommendation from the Planning Commission for a variance from the regulation in question.

Section 19.03 ROADWAY LIGHTING

Sub-section A. Non-decorative Poles and Heads:
Non-decorative poles and heads shall only be utilized in the City where, upon the recommendation of the Planning Commission and approval of the City Council, a specific lighting plan has been approved.

(1) All roadway pole mounted fixtures shall not be mounted above thirty (30) feet, as measured from the top of the fixture to the adjacent grade of the horizontal plane being lit by the fixture.

(2) The fixture should house a high-pressure sodium lamp, with a cut-off lens and no more than 150 watts/pole.

Sub-section B. Decorative Poles and Heads:
Decorative poles and heads shall be installed as outlined on plans approved through the Community Development Department.

(1) All decorative roadway pole mounted fixtures shall not be mounted above eighteen (18) feet, as measured from the top of the fixture to the adjacent grade of the horizontal plane being lit by the fixture.

(2) The fixture should house a high-pressure sodium lamp, with no more than 150 watts/pole.

(3) Decorative roadway application fixtures should utilize highly refractive globes, which have a minimum of 85 horizontal and 345 vertical prisms, to evenly direct the light, and evenly diffuse the light source. The fixture should have the ability to have internal light directing reflectors that can be field installed after fixture installation, to accommodate customization of the lighting output, and/or to redirect unwanted light to the traffic area.

(4) The fixture should have photometrics, so that when used on a 40-foot wide road and placed on opposing 180 feet spacing, mounted on an 18-foot pole with a type III distribution and 150 watt HPS head, the following horizontal foot-candles should be produced on the roadway (using a .85 light loss factor):

(a) Average Maintained = 1 foot-candle or more.

(b) Maintained minimum = .4 foot-candles or more.

(c) Max/Min Uniformity = 4.54 or less.

(5) At 40 feet away from the pole, the roadway should not have less than .1 horizontal foot-candle minimum maintained at any point on the road and 1.5 vertical foot-candles, as measured from ground level to six feet above the ground, in the middle of the road.

(6) The refractor should be made of acrylic, and should be available in type III, and IV distributions, with a reflector in the top to eliminate uplight and redirect the light downward toward the surface, and a house light shield. It sets in die-cast aluminum polyester powder coated pod, which will allow easy access to all of the internal electrical components. It should have internal twist-lock style photocell receptacle when needed, and quick release wiring components on the socket, ballast, and igniter, with a Ground Fault Interrupted outlet mounted on the pod. Approved Manufacturers are as follows:

(a) Hadco Streetscapes Refractive Globes UT33A150SE-150HPS style or equal.

(7) Light posts shall be twelve (12) foot tall, 5” x 3” smooth tapered aluminum pole with a .125” wall thickness. Bolt circle shall be 14” diameter, four (4) bolts, 90° apart, with a decorative base 12 ¾” square X 45” high, with a three (3) inch outside diameter fitter. Aluminum is to be polyester powder coated black.

(a) Hadco Streetscapes Posts – 2520 style or equal.

Sub-section C. ROAD LIGHT LEVELS:

Roadway Lighting Maximum Levels (as measured at the horizontal plane being lit).

(1) The maximum point should not exceed 6 foot-candles within the circulation area being lit.

(2) The average light level should not exceed 1 foot-candle within the circulation area being lit.

(3) No more than 1 foot-candle will be allowed outside of 20 feet of the circulation area being lit.

(4) No more than .05 foot-candles will be allowed outside the property lines of the easement.

(5) No more than .01 foot-candles should be allowed to spill on any residential property as a result of another party lighting their own property.

Section 19.04 WIRING

Sub-section A. Lamp and Pole Wiring:
All internal wiring of the lamps shall be accomplished at the manufacturer's facilities. No alterations or modifications shall be accomplished as part of the installation of the lamps.

Sub-section B. Applicable Codes:
All underground wiring shall be accomplished in accordance with the current Electric Code adopted by the State of Utah.

Sub-section C. Wire or Cable:
Wire shall be a minimum eight (8) gauge copper wire and shall have appropriate coatings as required by the current Electrical Code. Wire and cable placed in conduit or direct burial shall be rated for the applicable use.

Sub-section D. Ground:
Pole will be grounded to grounding rod set in the footing as outlined in the standard Drawings. Neutral lines shall not be connected to the pole.

Sub-section E. Depth of Bury:
Direct burial cable conductors and non-metallic raceways shall be a minimum of twenty-four inches (24") below the top back of curb or finished grade, whichever is lower. All cable or conduit shall be inside a raceway where less than twenty-four inches (24") below the top back of curb or finished grade. Cables, conductors, and raceways shall have their location identified by a warning ribbon that is placed in the trench at least twelve inches (12") above the underground installation.

Sub-section F. Splices and Taps:
Buried conductors or cables, either contained in a non-metallic raceway or direct bury shall have no splices or taps.

Sub-section G. Backfill:
Backfill that contains large rocks, paving materials, cinders, large or sharply angular substances, or corrosive materials that may damage raceway, cables, or conductors or prevent adequate compaction of fill or contribute to corrosion of raceways, cables, or conduits shall not be utilized.

Sub-section H. Raceway Seals:
Conduits or raceways through which moisture may contact energized live parts shall be sealed or plugged at both ends. (Ord 02-19)

DIVISION 20: UNDERGROUND IRRIGATION SYSTEMS

PART 1 GENERAL

Section 20.01.01 SUMMARY

A. Section includes:
   1. Underground irrigation systems complete with heads, valves, controls, and accessories.

B. Related sections:
   1. Section 32 94 23 Planting

Section 20.01.02 REFERENCE STANDARDS

A. NFPA 70: National Electric Code.
B. ASTM: American Society for Testing and Materials
C. IA: The Irrigation Association: Main BMP Document, Landscape Irrigation Scheduling and Water Management Document.
D. ASIC: American Society of Irrigation Consultants: ASIC Grounding Guideline
E. City Codes/Ordinances relating to Landscape and Irrigation

Section 20.01.03 DEFINITIONS

A. Water Supply: Culinary and/or secondary pumping, piping, and components provided and installed by others to provide irrigation water to this project. Includes but is not limited to: storage ponds, pump stations, saddles, nipples, spools, shut-off valves, corporation stop valves, water meters, pressure regulation valves, and piping or components upstream of (or prior to) the Point-of-Connection.
B. Point-of-Connection: Location where the Contractor shall tie into the water supply for landscape irrigation needs and use. Tie to existing piping.
C. Main Line Piping: Pressurized piping downstream of the point-of-connection to provide water to remote control valves and quick coupling valves. Normally piping is under constant pressure.
D. Lateral Line Piping: Circuit piping downstream of the remote control valves to provide water to sprinkler heads, drip system, or bubblers. Normally piping is under pressure only when control valve is in operation.

Section 20.01.04 PERFORMANCE REQUIREMENTS

A. The work to be performed under this Section shall consist of furnishing all labor and materials necessary to construct a complete working and tested underground sprinkler irrigation system per all drawings and specifications, providing one hundred (100) percent head-to-head coverage on all lawn and planting areas on the site without overspray onto hardscape, buildings, or other site features. Included also will be system maintenance and warranties.
B. The efficiency of the completed irrigation system shall meet the following minimum standards:
   1. Circuits using spray sprinklers shall perform at a minimum 60% efficiency.
   2. Circuits using rotor sprinklers shall perform at a minimum 70% efficiency.
   3. Efficiency shall be determined by an independent water audit performed by a certified irrigation auditor selected by the Owner. The Contractor shall include in his bid price the cost of this audit. The audit shall be conducted after substantial completion and before final acceptance of the irrigation system.
C. The Contractor shall perform, but not be limited to, all of the following functions: paying all connection fees, deposits, and all other charges related to the connection to the water source; obtain all permits; complete all excavation and backfill; provide backflow device, tapping saddle, yoke, stop and waste, corp. cock, concrete vaults and miscellaneous pipe fittings; make necessary road repairs; provide safety barrier; make connection to water source; install all electric valves, valve control devices, meter base, conduit, junction boxes, and all necessary wiring. All work shall be in compliance to applicable codes and requirements of the utility companies involved.
D. If any or all of the above mentioned fees or charges are not listed on the bidding schedule or on plan, they shall be included in the bid lump sum price of the irrigation sprinkling system item.
E. Contractor shall verify with the appropriate water district the location of the water service main line and water pressure, and complete all requirements necessary to bring water service to the site. Total cost to be included in the irrigation sprinkling system bid item.

F. The above specification statement supersedes the graphic representation location of the contract limit line. This pertains to the water line location on either side of the street adjacent to the project site.
G. All work shall be done in accordance with the drawings and specifications, as well as all applicable water and electrical codes.
H. The Contractor shall operate, maintain until acceptance, and guarantee the new system as specified herein until all lawn and plants installed on this project have become established and have been accepted by the Owner.

Section 20.01.05 SUBMITTALS

A. Product Data: Complete set of manufacturer's technical data and installation instructions for all equipment to be installed on the project. Submittal shall be made prior to commencement of any irrigation work.
B. Main line and lateral line pressure test results: Submitted at the time of occurrence.
C. Operation and Maintenance (O&M) Manual:
   1. O&M manual shall contain the following information:
      a. Manufacturer cut sheets and current printed specifications for each element or component of the irrigation system.
      b. Parts list for each operating element of the system.
      c. Manufacturer's printed literature on operation and maintenance of operating elements of the system.
      d. Section listing instructions for overall system operation and maintenance. Include directions for spring start-up and winterization.
   2. Manual shall be submitted at least thirty (30) days prior to final inspection and acceptance of the project.
D. Complete As-Built Drawings:
   1. Drawings shall conform to the following criteria:
      a. One (1) 22" x 34" and one (1) 11" x 17" drawing shall be submitted.
      b. All submitted drawings shall be made on mylar.
      c. Show detail and dimension changes made during installation.
      d. Include field dimension locations of sleeving, points of connection, main line piping, wiring runs not contained in main line pipe trenches, valves and valve boxes, quick coupling valves.
      e. Dimensions shall be taken from permanent constructed surfaces, features, or finished edges located at or above finished grade.
   2. A complete set of as-built drawings shall also be submitted in electronic digital format (.pdf).
   3. As-Built drawings shall be submitted prior to final inspection and acceptance.
E. Controller Map: Each controller shall be equipped with a color-coded copy of the area that the controller services. Include valve zone number, type of plant material irrigated, and zone location on the project. Laminate map with heat shrink clear plastic and mount inside controller.

Section 20.01.06 QUALITY ASSURANCE

A. Acceptance: Do not install work of this section prior to acceptance of the area by the Owner as being properly prepared to receive said work (i.e. at proper grade, properly compacted, permanent fixtures in place, etc.).
B. Adequate Water Supply: Contractor shall verify that proper connection is available to supply lines, and is of adequate size and volume. Perform static water pressure test prior to commencement of work. Notify Owner of problems encountered prior to proceeding.
C. Workmanship: It is the intent of this specification that all materials herein specified and shown on the construction documents shall be of the highest quality available and meet the requirements specified. All work shall be performed in accordance with the best standards of practice relating to the trade.
D. The Contractor shall provide to the City a document or resume which includes the following information:
   1. The Contractor has been installing sprinkler systems on commercial projects for at least ten (10) previous consecutive years.
   2. The Contractor is currently licensed to perform landscape construction in the State of Utah.
   3. The Contractor is bondable and insurable for the work to be performed.

4. References of at least five (5) projects of similar size and scope completed within the last five (5) years. Three (3) of the projects listed must be located in the Wasatch Front area.
5. List of suppliers from whom materials will be obtained for use on this project.

Section 20.01.07 PROJECT CONDITIONS

A. Any discrepancies between existing site conditions and those indicated on the plans shall be called to the attention of the Landscape Architect prior to continuance of the project.

B. The Contractor shall use only the equipment and products specified in the construction drawings. No substitution of materials will be allowed on the irrigation system without prior authorization from the Landscape Architect and the Owner.

C. During delivery, installation, and storage of materials for the project, all materials shall be protected from contamination, damage, vandalism, and prolonged exposure to sunlight. All material stored at the project site shall be neatly organized in a compact arrangement and storage shall not disrupt the project Owner or other trades on the project site. All material to be installed shall be handled by the Contractor with care to avoid breakage or damage. Materials damaged by the Contractor shall not be used, but shall be replaced with new materials at the Contractor's expense.

D. The Contractor shall familiarize himself and his workmen with all hazards and existing utilities prior to commencing work.

PART 2 PRODUCTS

20.02.01 GENERAL

A. The Contractor shall provide all materials to be used on this project. The Contractor shall not remove any material purchased for this project from the project site, nor mix these project materials with other contractor-owned materials. The Owner retains the right to purchase and provide project materials.

B. Handling and unloading of all equipment, pipe, and fittings shall be in such a manner as to insure delivery at the job site in a sound, undamaged condition. Any equipment or pipe found to be damaged or defective in workmanship or materials shall be rejected or removed and replaced if found installed.

20.02.02 PIPE

A. All PVC pipe used on this project for the irrigation system shall conform to the requirements of ASTM -1685. It shall be free from cracks, holes, foreign material, blisters, inside bubbles, wrinkles, and dents.

B. All main line pipe, four (4) inches inside diameter and smaller shall be Schedule 40 PVC solvent weld bell end unless otherwise specified.

C. All main line pipe, six (6) inches inside diameter and larger, shall be PVC Class 200 gasketed bell end (except as required for conversion to metal fittings).

D. All lateral line pipe shall be Schedule 40 PVC solvent weld.

E. Maximum flows allowed through main line and lateral line pipe shall be determined by water speed in the pipe. The maximum water speed allowed in both main lines and lateral lines is five (5) feet per second. The resulting maximum gallons per minute (gpm) allowed to flow through PVC pipes are as follows:

PIPE SIZE	GPM
3/4"	8
1"	12
1 1/4"	22
1 ½"	30
2"	50
2 ½"	75
3"	110
4"	190
6"	425

For sizes larger than 6", consult manufacturer's recommendations.

F. No bends in pipe shall be permitted. The Contractor shall use elbow fittings of ninety (90), forty five (45), twenty two and one half (22-1/2), and eleven and one quarter (11-1/4) degrees as individual situations demand.

G. All pipe used from the main line to the control valves shall be solvent weld Sch. 80 PVC pipe unless otherwise noted or shown on the construction drawings.

20.02.03 FITTINGS

A. All PVC fittings used on this project for the irrigation system shall conform to the requirements of ASTM D-2466.

B. Main Line Fittings:
1. All main line fittings four (4) inches inside diameter and larger shall be either M.J. or deep bell push-on, gasketed, ductile iron.
2. All main line fittings three (3) inches and smaller inside diameter shall be solvent weld Schedule 80 PVC.
3. All main line fittings three (3) inches and larger, whether ductile iron or solvent weld, shall be thrust blocked per details.
4. All main lines three (3) inches and larger having a horizontal change of direction shall have proper concrete thrust blocks installed. Vertical changes in direction shall require the use of M.J or ductile iron fittings with thrust restraining devices (Mega Lug or Harco Knuckle Joint Restraints) in addition to appropriate concrete thrust blocking. The size and type of thrust block depends on pressure, pipe size, type of soil, and type of fitting. As a general rule, one (1) cubic foot minimum of class AA (AE) Type II concrete is required for each thrust block. Follow thrust blocking details for calculating thrust block size.
5. M.J. tees, Schedule 80 tees with SxT Schedule 80 bushings, or Harco ductile iron service tees are approved on PVC main lines for automatic control valve installation. M.J. fittings shall be greased and wrapped.

C. Lateral Line Fittings:
1. All lateral line fittings shall be solvent weld Schedule 40 PVC.
2. All risers and exposed fittings shall be solvent weld Schedule 80 PVC, including conversions to metal pipe and fixtures, unless otherwise noted on the plans.

D. PVC Cement: Solvent weld or glued joints shall use the following materials:
1. Primer: IPS Weld-On P-70 Primer (purple), ASTM D-2564.
2. Cement: IPS Weld-On 711 Heavy Bodied PVC Cement (gray), ASTM F-656.

20.02.04 VALVES

A. Master Valve: All master valves shall be as specified in the Irrigation Equipment Schedule. Master valve assembly shall be installed according to detail in drawings.

B. Isolation Gate Valve:
1. Isolation gate valves shall only be used on the main line.
2. Isolation gate valves shall conform to AWWA specification C 509. They shall be of Class 200 cast iron body, resilient-seat, and have a non-rising stem with rubber "0" rings. Stems shall be of cold rolled, solid bronze, high tensile strength. Valves shall be hydrostatically pressure tested for 400 P.S.I. and shall be designated for a working pressure of 200 P.S.I. Each valve shall contain a resilient wedge urethane rubber seat. Unless otherwise shown or specified, valves three (3) inches and larger shall have flanged end connections.
3. Buried valves shall have two (2) inch square operating nuts. No handles or wheels will be permitted. Valves inside structures (vaults or valve boxes) shall have wheel handles.
4. Action unions shall be installed on each side of all valves except flanged valves.
5. The Contractor shall provide adequate material for the connection of valves to the system, i.e., adapters, flanges, nuts, bolts, gaskets, etc.
6. All buried main line isolation valves shall be fitted with a four (4) inch minimum diameter pipe sleeve place over the top of the valve vertically and extended to grade. Cover with a ten (10) inch round "Carson" valve box with bolt down lid and set at finished grade.

C. Remote Control Valve Assembly:
1. Remote control valves shall be as specified in the Irrigation Equipment Schedule.
2. Remote control valves shall be globe configuration, electrically activated, normally closed, forward flow design.
3. All pipe on the control valve assembly shall be Schedule 80 PVC pipe. See detailed drawings.

4. Action unions shall be installed on each side of the control valve assembly, allowing valve to be removed from the box for maintenance without cutting pipe.
5. Each control valve shall have a brass gate or ball valve installed immediately upstream of the valve and located within the same valve box.
6. Flows through each remote control valve shall not exceed the following limits:

VALVE SIZE	GPM RANGE
1"	1 - 30
1 ½"	31 - 75
2"	76 - 150

7. Each drip remote control valve assembly shall contain the following components:
   a. PVC ball valve.
   b. Inline disc or screen filter with 100 micron/150 mesh filter element.
   c. Remote control valve capable of operating at very low flow levels.
   d. Inline pressure regulator.

   All components shall be installed according to manufacturer's recommendations, and located within a single valve box, one valve per box (no multi-valve assemblies permitted).

D. Quick Coupling Valve Assembly:
1. Quick coupling valves shall be as specified in the Irrigation Equipment Schedule.
2. Quick coupling valves shall be heavy duty brass, two-piece, single lug locking cap.
3. The Contractor shall provide to the Owner at least 1 cap lock key and 1 quick coupling key with a swivel hose bib attached. These keys shall be delivered prior to final acceptance of the project.

E. Manual Drain Valve Assembly:
1. All manual drains shall be three quarter (3/4) inch heavy duty brass ball valve.
2. Manual drain valves shall be required at all low points in the main lines. See plans, notes, and details.
3. The location of each manual drain shall be shown on the "as built" drawing with dimensions from the nearest permanent fixture, such as a building corner, etc.
4. Each manual drain valve will be accessed by a vertical two (2) inch PVC Schedule 40 pipe sleeve, capped by a locking valve cap with a key, enclosed within a ten (10) inch round valve box with bolt down lid. The top of the drain sleeve shall be three to six (3 - 6) inches below the lid of the valve box.
5. Each manual drain shall empty into a gravel sump, a minimum of eighteen (18) inches by eighteen (18) inches by twelve (12) inches deep. The gravel shall be washed three quarter (3/4) inch rock.

F. Automatic Drain Valves: Automatic drain valves shall not be used.

20.02.05 VALVE BOXES

A. All valve boxes shall be Carson series with locking lid, or approved equal.
B. Valve box size shall be listed in the installation details for each irrigation system component.

20.02.06 BACKFLOW PREVENTION ASSEMBLY

A. Backflow prevention devices shall be a reduced pressure principle backflow preventer consisting of a pressure differential relief valve located between two independently operated spring-loaded "Y" type center guided check valves. Assembly shall also have two full port resilient seated ball valves for shut-off and four resilient seated ball valve test cocks and bronze body construction. Larger sizes (2 ½" and up) may have two non-rising stem resilient wedge gate valves in lieu of ball valves.
B. Backflow preventer shall be as specified in the Irrigation Equipment Schedule.

20.02.07 FILTER AND ENCLOSURE

A. Filters and their enclosures shall be required on all systems using secondary water. Systems using reclaimed water (from a wastewater treatment plant) may not require a filter.
B. Filters shall be as specified in the Irrigation Equipment Schedule. Filters may be either plastic or steel construction, with screen (perforated or weavewire stainless steel) or plastic disc filter elements.
C. Filter enclosures shall be either commercially or custom fabricated. They shall be constructed of solid sheet marine grade aluminum, with one hundred (100) percent stainless steel hardware, and locking mechanism. They shall exhibit vandal- and weather-resistance and offer easy access.

D. Enclosures shall be mounted on either a pre-manufactured mounting pad with support base or minimum six (6) inch concrete pads. See detail.

20.02.08 AUTOMATIC CONTROL SYSTEM

A. Furnish a low voltage automatic control system manufactured expressly for the operation of automatic control valves used in an underground irrigation system.

B. Automatic controller devices shall be as specified in the Irrigation Equipment Schedule. No substitutions shall be allowed. Unless specified otherwise, install as follows:
   1. Install in stainless steel enclosure, model as specified in the Irrigation Equipment Schedule.
   2. Whenever a single site has 2 or more controllers, the 2nd and subsequent controllers shall also be mounted in a separate stainless steel enclosure as specified in the Irrigation Equipment Schedule.
   3. Metered enclosures, if required, shall be mounted on a 4" thick concrete pad. Regular enclosures may use a pre-manufactured mounting system as specified in the Irrigation Equipment Schedule.

C. Provide adequate capacity to accommodate each valve on the system separately. Do not double valves to circuits.

D. The Contractor shall provide 120 volt electrical service to the controller. Install meter inside meter socket of the enclosure. Coordinate this work with the Owner and other trades involved in the project.

E. Every controller shall be installed to control a single point of connection (P.O.C.). That point of connection shall be exclusively associated with that controller. Each P.O.C. assembly shall consist of the main line tap, reverse pressure backflow prevention device (if required), filter (if required), master control valve, flow sensing device, manual drain valve, and quick coupling valve. No controller shall be wired to control valves which are connected to another P.O.C.

20.02.09 CONTROL VALVE WIRE

A. All irrigation control wire shall bear approval as U.L. listed type of underground feeder (direct burial) and each conductor shall be of electrical conductivity grade solid copper in accordance with ASTM 30.

B. No aluminum wire shall be used on this project.

C. Wire size shall be #14 gauge minimum.

D. Two spare wires shall be run from each controller to the farthest valve under its control in all directions and any valve which is on a dead-end line.

E. All wire crossing water, attached to bridges, going under paving, or where conditions require protection, shall be housed in conduit or sleeves. All out-of-ground conduits shall be rigid metal. All buried conduit may be PVC.

F. All splices shall be water-tight. All connections made inside the box to connect wires to the valve shall be made using a 3M DBY dry-splice connector or pre-approved equal. Each connector shall be completely sealed and water-proofed.

G. All other splices in control wire shall be housed in a separate valve box.

H. The pigment or color of the wires shall be integrated into the covering, rather than painted on. All common or ground wires shall be white in color. Where more than one controller is required, a different colored hot wire shall be used for each controller. A separate color shall be used for all spare wires.

20.02.10 SPRINKLER HEADS

A. General:
   1. All heads used on this project shall be as specified in the Irrigation Equipment Schedule shown on the plans.
   2. All sprinkler heads and nozzles shall be as specified in the Irrigation Equipment Schedule.

B. Spray/Rotary Sprinklers:
   1. Spray/Rotary sprinklers shall have either four (4), six (6), or twelve (12) inch pop-up height and built-in check valve. In areas where water pressures are high or fluctuating, pressure regulating series sprinklers shall be used.
   2. Spray/Rotary sprinkler nozzles shall be plastic matching precipitation rate nozzles. Variable arc nozzles may be used to meet irregular-shaped areas.
   3. Attachment options shall be as specified in the installation details.

C. Rotor Sprinklers:
   1. Rotor sprinklers shall be equipped with stainless steel rotor sleeve and check valve.
   2. Rotor sprinkler nozzles shall be as manufactured for each individual model.
   3. Small rotor sprinklers (½" bottom inlet) may be installed using swing pipe per installation details. Medium (3/4" bottom inlet) and large (1" or greater bottom inlet) rotor sprinklers shall be installed using swing joints as shown in the installation details. Swing joint size shall match sprinkler inlet size.

D. Bubblers, Tree Well, and Root Watering Systems: Installed per manufacturer's recommendations. Use only where and when specified.

20.02.11 DRIP IRRIGATION

A. Drip irrigation materials shall be as specified in the Irrigation Equipment Schedule.

B. Emitters shall be of the individual, self-cleaning, pressure-compensating type.

C. Dripline tubing shall be constructed of high quality linear, low density, UV-resistant, polyethylene resin materials with internal, integral emitters at specified intervals.

D. All insert barbed fittings shall be constructed of molded, UV-resistant plastic. Each fitting shall have a minimum of two (2) ridges or barbs per outlet. All fittings shall be from the manufacturer and shall be available in one of the following end configurations:
   1. Barbed insert fittings.
   2. Male pipe threads (MPT) with barbed insert fittings
   3. Female pipe threads (FPT) with barbed insert fittings.

E. Each drip remote control valve assembly shall contain the following components (in required sequence):
   1. PVC ball valve.
   2. Inline disc or screen filter with 100 micron/150 mesh filter element.
   3. Remote control valve.
   4. Inline pressure regulator.

F. Provide the following equipment to each drip valve circuit, located and installed per manufacturer's recommendations:
   1. Line flushing valve(s) - minimum of one (1) on each exhaust header, and one (1) on each supply header.
   2. Air/Vacuum relief valve(s) at all high points in the system if required by the manufacturer.

20.02.12 FLOW SENSING EQUIPMENT

A. Where specified, each controller shall be installed with its own corresponding flow sensor on a single point of connection to the water source.

B. The flow sensor shall be compatible with the specified controller.

C. Size the flow sensor so that it is able to read the high and low flows of the valves used on that particular controller. Install per manufacturer's specifications.

PART 3 EXECUTION

20.03.01 GENERAL

A. The irrigation plan is diagrammatic in nature, and some drafting liberties have been taken to maintain the graphic clarity of the drawings. All irrigation equipment shall be located in planting areas only, unless noted otherwise. The Contractor shall install piping to minimize changes in direction, avoid placement under large trees or large shrubs, and avoid placement under hardscape features. Refer to the irrigation legend, details, and specifications for equipment and proper installation.

B. Site Visit: The Contractor shall visit and inspect the project site. He shall take into consideration known and reasonably inferable conditions affecting the proposed work. Failure to visit the site shall not relieve the Contractor of furnishing materials and performing the work required. Any discrepancies between existing site conditions and those indicated on the plans shall be called to the attention of the Owner prior to continuance of the project.

C. The Contractor shall keep the premises clean and free of excess equipment, materials, and rubbish incidental to work of this project. Work areas shall be swept clean and trash and debris picked up daily. Open trenches or hazards shall be protected with yellow caution tape. The Contractor is

responsible for removal and legal disposal (off site) of trash and debris generated by his work on this project.

D. Existing Landscapes:
   1. Where existing landscape areas are a part of the project, the Contractor shall repair or replace work damaged by his irrigation system installation at his own expense. If the damaged work is new, the Contractor or the original installer of that work shall perform repairs at the Contractor's expense. The existing landscape shall remain in place, protected and undisturbed.
   2. The Contractor shall protect and work around all existing plant materials designated to remain.
   3. Coordination of trench and valve locations shall be laid out prior to any excavation work. Plant material deemed by the Landscape Architect to be damaged by the Contractor shall be replaced with new plant material at the Contractor's expense. The Contractor shall not cut existing tree roots larger than two (2) inches in diameter. Route pipe, wire, and irrigation components around tree canopy drip lines where possible to minimize damage to tree roots.
   4. The Contractor shall leave no part of the existing landscape without water for more than forty eight (48) hours at a time.

E. Pre-Construction Meeting: A pre-construction shall be held prior to beginning any work on a project. The Owner, the project designer, and the Contractor and his Sub-contractors shall all be in attendance.
   1. The purpose of this meeting is to review project goals and expectations, the project schedule, and all procedures relative to inspections, permits, and changes that may arise.
   2. In the pre-construction meeting, it shall be made clear that the construction documents (plans, details, specifications, and contract) shall be binding upon the Contractor and upon all of his work. Any work not in accordance with the plans and specifications shall be rejected, and the Contractor shall bring the project into compliance at his own expense.

20.03.02 CONSTRUCTION STAKING

A. The Contractor shall provide the necessary staking to obtain the layout shown on the plans. The points of reference shall be as indicated in the drawings, and shall include such features as the existing walks, buildings, curbs, etc. The staking may be approved by the Landscape Architect prior to commencing installation operations. Any changes in the system which appear necessary due to field conditions must be called to the attention of the Landscape Architect and approved at the time they are discovered and prior to making any changes.

20.03.03 EXCAVATION AND BACKFILLING

A. Excavation:
   1. Excavation work shall be as deep and as wide as will be required to safely perform the work, such as making mainline connections or forming vaults.
   2. Trenches shall be deep and wide enough to provide working space for placing two (2) inches of bedding underneath all new mainline pipe and fittings where the soil is rocky or gravelly. Place eighteen (18) to thirty (30) inches of cover over the top of all pipe and fittings on main lines. All trench bottoms shall be sloped so that the pipes will gravity-drain back to the main connection point or the nearest manual drain. If the existing main line is deeper than thirty (30) inches, the Contractor shall install a riser to a depth of eighteen (18) to thirty (30) inches and then install the new line at the required depth. At no time will the mainline be installed with less than eighteen (18) inches or greater than thirty (30) inches of cover unless prior approval is given by the Landscape Architect.
   3. Trenches shall be deep enough to maintain twelve (12) to fourteen (14) inches of cover over the top of all lateral line pipe and fittings. They shall be deep enough to guarantee that all swing joints drain back to the lateral lines. Trenches shall be a minimum of twelve (12) inches away from any walks and/or curbs, buildings, or other hardscape improvements. They shall be of sufficient width to accommodate tees and other fittings that come out sideways (horizontally) from the lateral lines. Lateral lines may be pulled by a mechanical puller provided all other applicable specifications are met.
   4. Any rocks or other debris over one (1) inch in diameter uncovered during excavation or trenching shall be removed from the area.
   5. If more than one (1) pipe line is required in a single trench, that trench shall be deep and wide enough to allow for at least six (6) inches of horizontal separation (if both are lateral lines), or

six (6) inches of both horizontal and vertical separation (if one line is a main line) between pipes.

6. Any existing utility lines damaged during excavating or trenching shall be reported immediately to the Landscape Architect, the utility Owner, and the project Owner. After proper notification to the Landscape Architect, the utility Owner, and project Owner, repairs to the damaged utility shall be made immediately. Repair materials and methods shall meet industry standards and the utility Owner's satisfaction. Should utility lines be encountered which are not indicated on the plans, the Owner shall be notified. The repair of any damage shall be done as soon as possible by the Contractor or the utility Owner, and proper compensation to the Contractor shall be negotiated with the Owner. Such utility locations shall subsequently be noted on the "As-Built" drawings required before final payment of the irrigation system contract.
7. Where trenching is done in established lawn, care shall be taken to keep the trenches only as wide as is necessary to accomplish the work. The trenches shall be backfilled as specified and then four (4) inches of topsoil placed to bring the trench up to existing grade so that sod can be laid. Only new sod shall be used as trench cover. It shall be established new sod of standard width and shall be laid along the trenches so as to match the existing sod. No small pieces of sod shall be used and only standard lengths shall be accepted. No sod from the construction site shall be used unless otherwise specified. In the event of any backfill settlement prior to the end of the guarantee period, the Contractor shall perform the required repairs at his own expense.

B. Backfilling:

1. No backfilling of trenches shall be done until the system has been inspected and approved by the Landscape Architect for proper trench depths, installation of equipment, control wire, and location of heads.
2. Before trenches are backfilled, the Contractor must show the Landscape Architect the redlined "As-Built" drawing he has been keeping on the site, indicating that changes and corresponding dimensions have been recorded where such changes have been made.
3. Prior to backfilling, the system shall be tested under pressure for leaks and general operation of the equipment. The main line shall be tested for a period of four (4) hours at a pressure of 120 PSI. Any failures detected during the testing period shall be repaired by the Contractor and the testing shall be repeated. The Landscape Architect shall certify the testing to insure that it has been completed and that the system has met all testing requirements. All defects discovered by the pressurization and operation test shall be corrected by the Contractor at his own expense before proceeding with further work.
4. Trench bedding and backfill material shall be existing site soil free of rocks larger than one (1) inch in diameter and any other debris. Wasted pipe and other excess project materials or rubbish (tape, wire, trash, wrappers, boxes, bottles, etc.) shall not be backfilled into the trenches. All trenches shall be backfilled, and then watered sufficiently to insure no settling of the surface. In the event of any backfill settlement prior to the end of the guarantee period, the Contractor shall perform all required repairs at his own expense.
5. Backfill under and around the lines to the center line of the pipe shall be placed in maximum layers of six (6) inches and thoroughly compacted. Compaction shall be ninety five (95) percent relative density (modified proctor) under walks and roads, and eighty five (85) percent in planting areas.
6. Special care shall be taken to assure complete compaction under the haunches of the pipe. Backfill compaction under the haunches of the pipe shall be compacted to the original density. Compaction requirements above the pipe shall be the same as for surrounding areas.

20.03.04 POINT-OF-CONNECTION

A. The Contractor shall verify the location of the irrigation point-of-connection (P.O.C.) and the static water pressure at that location prior to beginning any irrigation work. Verify water pressure during the time of day that the irrigation system is intended to operate.

B. If the P.O.C. location or water pressure is different than that expressed by the irrigation designer, or if the pressure appears to be unusually high or low, the Contractor shall notify the Landscape Architect immediately.

20.03.05 ELECTRICAL POWER SUPPLY

A. If 120 volt ac electrical service is not already in place, the Contractor shall be required to make all necessary arrangements with the appropriate power company and perform all necessary materials

and labor to provide said power, including but not limited to: paying fees, making power connections, providing poles, weatherhead and meter, etc., as specified on the plans or as required by the power company and the Owner. The exact location of the automatic controller which shall receive the power shall be determined by the Landscape Architect and the Owner

20.03.06 PIPE AND FITTINGS

A. Install pipe to allow for expansion and contraction as recommended by pipe manufacturer. Where the main line will be allowed to sit uncovered for any length of time in the trench prior to testing, shade the main line with a thin covering of backfill soil to minimize weather-related expansion or contraction of the pipe. Do not cover up valves or other installed equipment prior to inspection and acceptance.

B. The ends of all pipe shall be cut squarely, and remain free of all inside scale or burrs. Spigot ends of pipes three (3) inches and larger shall be beveled. Threads shall be cut clean and sharp, and to a length equal to one and one eighth (1-1/8) times the length of the female thread receiving the pipe. The threaded pipe shall be screwed into a full length of the female thread.

C. All threaded pipe joints shall be properly sealed using Teflon tape that is properly applied to the areas to be joined.

D. Solvent weld joints shall not be glued unless ambient temperatures are at least forty (40) degrees F. Pipe shall not be glued in rainy conditions unless properly tented. Use only the brand and type of primer and glue specified. Glued main line pipe shall cure a minimum of four (4) hours prior to being energized. Lateral lines shall cure a minimum of two (2) hours prior to being energized and shall not remain under constant pressure unless cured for twenty four (24) hours.

E. Every care shall be taken during installation to prevent dirt and debris (especially rocks and pipe shavings) from getting into the pipes.

F. All tees coming out of main lines for valves and other fixtures shall be vertical and constructed with Sch. 80 PVC pipe.

G. All tees coming out of the lateral lines for heads and other fixtures shall be horizontal so that no direct weight or pressure may be exerted through the head to the top or bottom of the lateral line pipe. Tees on lateral lines shall also be SxSxT to the head swing joints.

20.03.07 THRUST BLOCKS

A. Thrust blocks are needed wherever the main pipe line:
   1. Changes any direction at tees, angles, and crosses vertical and horizontal.
   2. Changes size at reducers.
   3. Stops at a dead-end.
   4. Valves at which thrust develops when closed.

   The size and type of thrust block depends on pressure, pipe size, type of soil, and type of fitting. As a general rule, one cubic foot (minimum) of class AA (AE) Type II concrete (2,000 psi minimum) is required for each thrust block. Follow the ductile iron fitting manufacturer's recommendations for the minimum thrust block size.

B. Thrust blocks shall rest against undisturbed original earth in the direction of thrust.

C. Where a fitting is used to make a vertical bend, use a three eights (3/8) inch bar to anchor the fitting to a thrust block braced against undisturbed soil. The thrust block should have enough resistance to withstand upward and outward thrusts at the fitting.

D. Where concrete thrust blocking shall come in contact with PVC pipe, wrap the PVC pipe with a layer of plastic to protect the pipe from any caustic effects that may be caused by the concrete mix.

E. Thrust restraining devices may be used in lieu of thrust blocking, but they must be installed strictly according to manufacturer's recommendations. Use of these devices in lieu of thrust blocking shall be approved by the Owner or Owner's Authorized Representative prior to use.

20.03.08 PIPE SLEEVES

A. Pipe sleeves shall be required for all piping under all new concrete or other new paving. The size of the sleeve shall be at least twice the size of the pipe or wires to be sleeved. Wires shall be sleeved separately within their own sleeve. All pipe sleeves four (4) inches and smaller in diameter shall be PVC Schedule 40 pipe; sleeves greater than four (4) inches in diameter shall be Class 200 PVC.

20.03.09 VALVES

A. General:

1. Isolation valves, remote control valves, and quick coupling valves shall be installed according to manufacturer's recommendations and these drawings and specifications.
2. Valve boxes shall be set over valves so that all parts of the respective valve assembly can be reached for service. Valve box and lid shall be set to be flush with the proposed finished grade.
3. No valve box shall rest directly upon the valve or any fixture associated with it, including main line and lateral lines. Each valve box shall be centered on the valve assembly it covers. Each valve box shall have four (4) inches of three quarter (3/4) inch gravel placed in the bottom underneath the valve and lines to reduce the potential of mud and standing water therein.

B. Remote Control Valve:
1. Each control valve shall have its own gate or ball valve (as specified), and only one (1) control valve and gate/ball valve per valve box. No valve manifolds shall be allowed.
2. The bottom of the remote control valve shall be a minimum of four (4) inches above the gravel.
3. All control valve assemblies shall be placed within planting areas and in the approximate location as shown on the plans. No large grouping of valves (greater than 3) in any one spot shall be allowed.
4. Control valve assemblies shall be installed no closer to one another then two (2) feet.
5. No control valve shall be installed more than twelve (12) inches below finished grade.
6. Tag each control valve with a permanent and non-smearing label indicating its proper controller and valve number as shown on the irrigation plans.

C. Quick Coupling Valve:
1. Quick coupling valves shall be installed within a ten (10) inch round valve box unless next to concrete pad. In the latter case, install at finished grade.

20.03.10 VALVE BOX

A. Where indicated in the installation details, valve boxes shall rest on concrete pavers only, thus eliminating any weight or pressure from being exerted on the main line or valve inside the valve box. There shall be a minimum of three (3) inches of clear space between the bottom of the valve box lid and the topmost part of the valve (including solenoid).

B. Valve box extensions shall be used where necessary to prevent soil around the valve from collapsing into the space inside the valve box.

20.03.11 BACKFLOW PREVENTION ASSEMBLY

A. The Contractor shall install backflow prevention equipment behind (downstream from) the point-of-connection to the supplying main and lateral lines. Installation shall comply with local, state, and national codes and regulations, and per manufacturer's recommendations (whichever is most restrictive). See plans and details for more information. Install a quick coupling valve just downstream of the backflow prevention assembly for system blowout purposes.

B. The Contractor shall have the backflow prevention assemblies operation tested within ten (10) days of the time of installation by a certified backflow preventer assembly tester. Testing shall be conducted per state requirements to insure proper and safe operation. Subsequent annual testing at spring start-up shall be the responsibility of the Owner.

20.03.12 FILTER & ENCLOSURE

A. The Contractor shall install the filter and its enclosure just downstream from the point-of-connection and upstream from the backflow prevention assembly (if present).

B. The filter shall be equipped with a ten (10) foot length of hose that can be attached to the exhaust port of the filter to direct water and debris away from the enclosure during flushing operations. Auto-flush filter models shall be provided with a permanent method of capturing and directing exhaust water away from the filter assembly without creating puddles, ponding, or any other nuisance drainage problems.

20.03.13 WIRE & CABLES

A. Multiple wires in the same trenches shall be banded together at ten (10) foot intervals for protection. Where wires pass under paved areas, they shall be installed in Schedule 40 PVC sleeves. These sleeves shall be installed prior to installation of the paving, if possible, and prior to installation of the wires. Sleeves for fourteen (14) gauge wires shall be sized as follows:

NUMBER OF WIRES	SLEEVE SIZE
1 - 10	1"

11 - 18.....1 1/4"
19 - 25.....1 1/2"
26 - 40.....2"
41 - 56.....2 ½"
57 - 88.....3"
89 - 150.....4"

B. All control wires shall be bundled and taped together every ten (10) feet and installed in the pipe trench directly adjacent to the pipe. Control wires not placed in the trenches adjacent to the pipes shall be placed in PVC electrical conduit and buried eighteen (18) inches or deeper and marked on the "as built" drawings.

C. Two (2) spare wires shall be run from each controller to the farthest valve under its control in all directions and to any valve which is on a dead-end line. The spare wires shall be a different color from the regular wires and shall be labeled at both ends. Each spare wire shall be brought up to the surface in each valve box it passes through and coiled with twenty four (24) inches for use in future connections. Each spare wire shall be tested for continuity prior to final acceptance of the project and guaranteed by the Contractor to be functional. Should the maintenance personnel discover a defect within one (1) year afterwards, the Contractor shall locate the problem and cause it to be repaired at his own cost. Install extra wires as needed for moisture sensors.

D. Run a single 14 gauge wire along the top of the main line to be used for tracking the location of the main line. The color of the tracing wire shall be different than any other wire color used.

E. All wires shall be installed with twenty four (24) inches of excess wire (coiled) at the end of each wire run, wire splice, and at each controller.

F. Isolation valves, quick coupling valves, manual drain valves, and wire splices not specifically associated with the control valve shall be located in separate valve boxes.

20.03.14 SPRINKLERS

A. General:

1. All sprinkler heads shall be installed above grade so as to minimize washing of the topsoil and seed during the landscaping establishment period, except those which border paving or flat work of any kind. These heads shall be installed at the finished grade of the adjacent paving or flat work. Prior to final acceptance of the project, all heads shall be raised or lowered to final lawn or planting grade.
2. All sprinkler heads shall be installed using the bottom inlet. No side outlets shall be used.
3. Rotor heads located on hillsides shall be adjusted to the downhill side to avoid cutting into the hill by the stream of water and causing erosion.
4. Heads installed in existing sod shall be set at the grade of the soil.
5. All rotary pop-up heads shall be installed at final grade on double swing joints. All swing joints must drain by gravity back to the supply lines.
6. All pop-up, shrub spray/rotary, turf spray/rotary, bubbler and strip spray/rotary heads shall be installed as shown in the details.
7. All pipes, lines, and risers shall be flushed thoroughly with water before installation of any heads. All debris and rocks found at that time shall be removed from the area as soon as possible.
8. All spray sprinklers shall be flushed thoroughly with clean water a second time before installation of nozzles.
9. The Contractor shall adjust all heads to provide a uniform coverage and to keep spray off buildings, walkways, walls, parking areas, and drives.
10. Check valves shall be used where indicated and where necessary to prevent water flow from lower elevation heads when system is turned off. Install per manufacturer's recommendations.

B. Inline Drippers

1. Inline drip tubing shall be spaced at a distance equal to or less than the inline emitter spacing. For slope applications, place drip tubing laterals parallel to the slope contour. When slopes exceed thirty (30) percent, increase the recommended lateral spacing by twenty five (25) percent on the lower one third (1/3) of the slope.
2. Inline dripper tubing shall be installed at finished grade with soil staples and covered with three (3) inches of specified mulch. Supply and exhaust headers shall be installed at normal lateral line depths.
3. All drip tubing shall be held in place by soil staples and shall conform to the following:

a. Sandy Soil - One staple per every three (3) feet and two (2) staples on each change of direction (tee, elbow, or cross)
b. Loam Soil - One staple every four (4) feet and two (2) staples on each change of direction (tee, elbow, or cross)
c. Clay Soil - One staple every five (5) feet and two (2) staples on each change of direction (tee, elbow, or cross)

4. Installation of inline drip circuits shall generally conform to the following steps:
   a. Assemble and install ball valve, filter, remote control valve and pressure regulating valve assembly in accordance with installation details.
   b. Assemble and install supply header(s) in accordance with installation details. Tape or plug all open connections to prevent debris contamination.
   c. Install lateral drip lines in accordance with details and relevant specifications and manufacturer's recommendations. Tape or plug all open ends while installing to prevent debris contamination.
   d. Assemble and install exhaust header(s) in accordance with installation details. Tape or plug all open connections to prevent debris contamination.
   e. Install air/vacuum relief valve(s) at the zone's highest point(s) in accordance with installation details.
   f. Thoroughly flush supply header(s) and connect drip lateral lines while flushing.
   g. Thoroughly flush drip lateral lines and connect to exhaust header(s) and any interconnecting lateral lines while flushing.
   h. Thoroughly flush exhaust header(s) and install line flushing valves in accordance with details.

20.03.15 AS-BUILT DOCUMENTS

A. The Contractor shall keep a current and accurate record of exact dimensioned locations, grades, elevations, and the size of all exterior and interior underground piping, valves, and drains. Dimensions shall indicate distances from columns, buildings, curbs, and similar permanent features on the site. This information shall be recorded on a print as the work progresses, but shall be permanently recorded on a reproducible two (2) mil mylar or Tyvek original which shall be given to the Owner before the project is accepted. The mylar or Tyvek shall be a copy of the original plans for the project produced by a local printer at the Contractor's expense.

B. Final payment for the contract will not be processed until "As-Built" drawings or plans are received by the Owner.

20.03.16 OPERATIONAL TEST AND MAJOR INSPECTIONS

A. Substantial Completion:
   1. At substantial completion of the irrigation system, the Contractor shall call for an operational and coverage test. Substantial completion shall be defined as the complete installation of all irrigation equipment and completion of all backfilling and grading operations in their entirety. Substantial completion shall not be given for designated portions of the project.
   2. Notice by the Contractor shall be given, in writing, at least three (3) days in advance to the Owner so that proper scheduling can be made for those who are to attend.
   3. At the appointed time, an inspection of all irrigation equipment, including control valve assemblies, controllers, isolation valves, quick coupling valves, drain valves, and sprinklers shall be made. The entire system will be tested for operation, coverage, and head adjustment. Please note that the pressure testing of the main lines and lateral lines shall already have been completed prior to this time.
   4. A list of uncompleted items or repairs (punch list) shall be generated by the Owner and distributed to the Contractor and other involved parties within three (3) days of the operational testing. Each item on the punch list shall be corrected before the system will be approved and accepted by the Owner. The Contractor will be back charged for time spent by the Owner and any consultants who have been brought to the site for a final inspection when the project is not ready for said inspection.

B. Maintenance/Establishment Period:
   1. The duration of the irrigation maintenance period shall be equal to the plant maintenance/establishment period. It shall begin one (1) day after the substantial completion

inspection. The Contractor shall complete all punch list items during the maintenance period, as well as maintain and operate the entire irrigation system.

2. The irrigation Contractor (if different than the landscaping Contractor) shall coordinate with the landscaping Contractor during the entire plant and lawn establishment period on the use, scheduling, and maintenance of the sprinkler system.

C. Final Acceptance:

1. A second inspection shall be held at the end of the maintenance period to insure that all punch list items have been completed and the entire system is ready for acceptance by the Owner.
2. Upon satisfaction that the Contractor has completed all punch list items, the irrigation system is fully and completely functional, and the required As-Built drawings, mylars and maintenance manuals have been submitted, the Owner shall accept the project.
3. An official letter of final acceptance shall be prepared and issued to the Contractor, Landscape Architect, and the Owner. Upon acceptance of the system by the Owner, the Owner shall assume full responsibility for the system, and the guarantee period shall begin.

20.03.17 GUARANTEE AND MAINTENANCE

A. Guarantee:

1. Upon final acceptance of the irrigation system as being operational and properly installed, the Contractor shall guarantee the workmanship, materials, fixtures, and equipment to be free from defects for a period of one (1) year after that date.
2. The Contractor shall insure and guarantee complete drainage of the system. In working with or connecting to an existing system, the Contractor shall guarantee compatibility in operation and drainage between the two systems.

B. Maintenance Required During Guarantee Period:

1. In the fall of the year during the installation and guarantee period, the CONTRCTOR shall meet with the Owner's maintenance personnel on the site. The Contractor shall winterize the system by draining all of the water and doing everything necessary to insure protection of the system until spring. Blowing out the lines by compressor shall be permitted during the one (1) year guarantee. Maximum compressor pressure shall be 30 psi on spray circuits, 50 psi on rotor circuits, and 20 psi on all drip circuits. The individuals involved from both parties shall exchange all information necessary for the eventual take-over of the system by the Owner.
2. The Contractor, with the Owner's maintenance personnel and Owner in attendance, shall energize the sprinkler irrigation system again the following spring and shall repair all defects found as a result of winter damage, improper installation, improper maintenance, defective materials or inadequate sprinkler drainage.
3. At the end of the guarantee period, when the lawn and landscaping have been accepted, the Contractor shall call for a final inspection of the sprinkler irrigation system. There shall be at least five (5) days prior notice given in writing to the Owner so that the appropriate people have opportunity to attend.
4. Prior to that time, the Owner shall adjust all heads to their proper pattern, radii, and height. The system shall have been flushed out, checked for operation, and any defects not covered by the guarantee corrected shall be repaired. The entire system shall be inspected and checked to determine if everything is in working order. A final list of warranty items found in need of correction (if any) shall be made and the Contractor shall correct them. The Contractor shall notify the Owner when he has verified that every item is corrected.
5. After all warranty items have been corrected, the Owner shall, in writing, officially release the Contractor from all warranty claims pertaining to the irrigation system and assume full and complete responsibility for said system.

DIVISION 21: PLANTING

PART 1 GENERAL

21.01.01 SUMMARY

A. Section includes:
   1. Trees, shrubs, perennials, vines, and groundcover requirements.
   2. Bedding, topsoil, and temporary support.

B. The work to be performed under this section shall consist of furnishing all materials, labor, and plants necessary for the proper planting or all trees, shrubs, perennials, vines, and groundcovers of the kind and sizes specified at the prescribed locations, and otherwise in accordance with the drawings and specifications or as directed by the Landscape Architect.

C. Related sections:
   1. Section 32 84 23 Underground Irrigation Systems

21.01.02 REFERENCES

A. ANN: American Associations of Nurserymen, Inc.

B. ANSI Z60.1: American Standard for Nursery Stock.

C. FS O-F-241: Fertilizers, Mixed Commercial.

21.01.03 QUALITY ASSURANCE

A. Perform work in conformity with applicable requirements of AAN.

B. Upon receiving Notice to Proceed, the Contractor shall provide written proof that the specified plant material is available and has been secured or reserved specifically for this project. Obtain nursery stock and other plant materials from reliable and stable sources prior to order and delivery.

C. Provide plants that are declared free of disease and insect pests.

21.01.04 PRODUCT DELIVERY, STORAGE, AND HANDLING

A. Exercise care in digging, transporting, handling, and packing of all plants.

B. Handle plants so roots are protected at all times. If delivery is in open vehicles, cover entire load without causing over heating.

C. Deliver plant material immediately prior to placement. Keep plant material moist.

D. Protect root balls from sun and wind by covering with soil or other suitable material if not planted immediately on delivery.

E. Store fertilizer in a weatherproof location such that its effectiveness will not be impaired.

21.01.05 ACCEPTANCE

A. Plants shall be accepted if the ball of earth surrounding roots (rootball) has not been cracked or broken.

B. Plants shall be accepted if burlap, staves, and ropes required in connection with transplanting are installed and still intact upon delivery.

C. Heeled in stock from cold storage shall not be accepted.

21.01.06 SAMPLES

A. Samples of the materials listed below shall be submitted to the Landscape Architect for inspection and approval prior to the beginning of work under this contract.

B. Delivery of materials may begin only after samples have been approved. All materials furnished for the work shall conform in every respect to the approved samples. Any non-conforming materials will be rejected.

PART 2 PRODUCTS

21.02.01 GENERAL

A. The planting plan is diagrammatic, and all plant locations are approximate. Plant symbols take precedence over plant quantities shown on the plans and in the plant material schedule. The Contractor shall verify all plant quantities and notify the Landscape Architect of any discrepancies between the quantities and the symbols shown.

B. Provide plants of normal growth and uniform height, according to species, with straight canes and well developed leaders, roots, and tops.

C. Provide plants of sizes indicated. The size stated in each case shall be interpreted to mean dimensions of plant as it stands in its mature position in the nursery without straightening of any branches or leaders.

D. Provide legible labels attached to all plants, specimens, bundles, boxes, bales, or other containers indicating botanical genus, species, and size of each.

E. Plants cut back from larger sizes to meet specifications shall be rejected.

F. Balled and burlapped deciduous shrubs may be acceptable in lieu of container growth deciduous shrubs only if there is a demonstrated significant shortage of container grown stock.

21.02.02 PLANTS

A. All plants shall comply with federal and state laws requiring inspection for plant disease and infestations.

B. Any inspection certificates required by law shall accompany each delivery of plants and such certificate shall be given to the Landscape Architect. All plants shall be subject to inspection and approval at the place of growth or upon delivery to the site for their quality, size, species, and variety. Such approval shall not impair the right of inspection and rejection at the site or during progress of work for size and condition of the plants, latent defects, or injuries. Any and all rejected plants shall be removed immediately from the premises by the Contractor. The Contractor shall make all replacements at his expense should he fail to comply in full with any of the specifications. Necessary replacements will be made as soon as weather conditions permit and all such plants replaced shall conform to all specifications herein.

C. Names and Grades:

1. Plant names shall conform to the nomenclature of "Standard Plant Names" or "Bailey's Encyclopedia of Horticulture." When a name is not found in either reference, consult the accepted name used in the nursery trade. All plants shall be tagged by the nursery with the proper identification labels to insure the correct varieties of plants.
2. Size and grading standards shall conform to those of the American Association of Nurserymen, Inc., as published in "American Standard for Nursery Stock", 1959 Edition, with all current revisions unless otherwise specified.
3. The caliper of trees shall be measured six (6) inches above the surface of the ground.
4. Measurements on all trees and shrubs shall be taken with the branches in a normal position. Height and spread dimensions specified refer to the main body of the plant and not from branch or root tip to tip. No trees which have had their leaders cut or so damaged that cutting is necessary, will be accepted.

D. No substitution of size, grade, variety or any species shall be permitted except by written permission of the Landscape Architect.

E. Plant Size:

1. All plants shall conform to the size, age, and condition as specified in the plant list shown on the drawings. Undersized plant material shall not be approved.
2. No additional compensation shall be due the Contractor if larger than specified plant material is provided.
3. Due to the large size of the trees and evergreens being specified, only balled and burlapped or container stock shall be accepted. No bare root stock shall be accepted.

F. Plant List:

1. Plants lists indicate minimum size requirements only. Plant materials shall be equal to or greater in size than those specified.
2. Any discrepancies between plant lists and plans shall be immediately brought to the attention of the Landscape Architect.
3. In all cases the Contractor shall be held responsible for all plant materials indicated on the plans unless otherwise directed in writing by the Landscape Architect.
4. Each bidder shall investigate sources of supply and satisfy himself that he can supply all of the plants mentioned in the planting lists in size, variety, and quantity noted and specified before submitted his bid. Failure to take this precaution will not relieve the successful bidder from his responsibility as Contractor to furnish and install all plant material in strict accordance with the contract requirements without additional expense to the owner.

G. All plants shall be fresh and vigorous, of normal habit and growth, and free of disease, insects and insect eggs and insect larvae, weeds and weed seed. No heeled-in plants from cold storage shall be accepted except on approval by the Landscape Architect prior to installation.

21.02.03 TREE STAKES & TIES

A. Tree stakes shall be two by two (2x2) inch square or two (2) inch diameter round wood stakes eight (8) feet in length as indicated on the plans. Steel stakes may be used if approved by the Landscape Architect and reclaimed after one year.

B. Tree stake ties shall be manufactured of virgin flexible vinyl meetings ASTM-D-412 standards for tensile and elongation strength. The material shall be black in color for ultraviolet resistance. Hose and wire shall not be used.

21.02.04 TOPSOIL

A. All planting areas shall receive either a minimum of four (4) inches of stockpiled or imported topsoil in turf areas and twelve (12) inches in planting beds.

B. All topsoil used on this project (stockpiled or import) shall meet the following criteria:
   1. pH:.....5.5 - 8.0
   2. EC (electrical conductivity):.....<2.0 mmhos per centimeter
   3. SAR (sodium absorption ratio):.....<3.0
   4. % OM (percent organic matter):.....≥2%
   5. Texture (particle size per USDA classification):
      a. Sand:.....<70%
      b. Clay:.....<30%
      c. Silt:.....Balance
   6. Stone Fragments (gravels or any soil particle greater than two (2) mm in size):.....<5% (by volume)
   7. Rocks Present > 1.5” .....None

C. In addition, the topsoil shall be fertile, friable, natural loam and shall be capable of sustaining vigorous plant growth. It shall be free of stones, lumps, clods of hard earth, plants or their roots, sticks, and other extraneous matter. The topsoil shall contain neither noxious weeds nor their seeds. It shall not be used for planting operations while in a frozen or muddy condition.

21.02.05 WEED BARRIER FABRIC

A. A weed barrier fabric shall be placed in all planting beds to prevent the growth and spread of unwanted weeds. The fabric shall be Type #3301B or approved equal.

21.02.06 MULCH

A. Shredded bark mulch shall be used as a top dressing for all planting beds unless specified otherwise.

B. Shredded bark mulch shall conform to the following criteria:
   1. Bark pieces shall not exceed two (2) inches when passed through a screen of that size.
   2. Large chunks of bark or wood shall not be mixed in with the mulch.
   3. The bark mulch shall be primarily from coniferous trees.

C. Where used, the shredded bark mulch shall be place to a depth of three (3) inches on top of the topsoil.

D. Other mulches may be used only as specified on the drawings or in the planting notes and details.

21.02.07 FERTILIZER

A. Commercial fertilizer shall be uniform in composition, dry, and free flowing. Deliver fertilizer mixed as specified in bulk or bag, showing weight analysis, formula, and manufacturer’s name.

B. A 16-16-16 balanced fertilizer shall be used. Any exceptions to this formula shall be based on horticultural recommendations resulting from a site-specific soils test, and must be approved prior to application by the Landscape Architect.

21.02.08 MOWSTRIP

A. Where turf areas are separated from planting beds, a concrete mowstrip shall be used. No other edging materials may be used unless specifically noted on the plans and approved by the Landscape Architect.

B. The mowstrip shall constructed using concrete having a compressive strength rating of two thousand five hundred pounds per square inch (2,500 psi) or greater, and a maximum slump of four (4) inches.

C. A three eighth (3/8) inch diameter rebar (#3) shall be placed continuously in the center of the mowstrip to provide support and help prevent differential settling of the mowstrip after cracking. Overlap joints a minimum of twelve (12) inches.

PART 3 EXECUTION

21.03.01 GENERAL

A. Site Visit: The Contractor shall visit and inspect the site. He shall take into consideration known and reasonably inferable conditions affecting work. Failure to visit the site will not relieve the Contractor of furnishing materials and performing the work required.

B. Prior to any planting operations, the irrigation system shall be fully operational and all planting areas shall be thoroughly moistened.

C. Where weeds or other undesirable vegetation are present in planting areas, the Contractor shall apply a contact herbicide a minimum of ten (10) days prior to commencement of any planting or irrigation work. Apply herbicide per manufacturer's recommendations. The poisoned vegetation shall be allowed to completely die back, including the roots, before proceeding with the work. Dead vegetation shall then be removed from the site and disposed of in a legal manner.

D. The Contractor shall conform to the following requirements with regard to existing vegetation:

1. The Contractor shall be fully responsible for any damage to existing trees or shrubs. He shall use all reasonable means to protect and preserve plants on the project not designated for demolition.
2. No pruning, thinning, or cutting of existing vegetation shall be allowed unless written permission is given by the Landscape Architect.
3. The Contractor shall replace any trees or existing shrubs damaged by him or his sub-contractors with like kind and size.

21.03.02 PLANTING SEASONS

A. All new plant installation shall be completed between April 15 and October 15. If planting must be done after October 15 or before April 15, the Contractor shall obtain specific approval to do so from the Landscape Architect prior to beginning any planting operations.

B. No planting shall be done in frozen soil or during unfavorable weather conditions, subject to the approval of the Landscape Architect.

21.03.03 TOPSOIL

A. The Contractor shall obtain a soil analysis from any authorized soil testing agency of any existing stockpiled or imported topsoil to be used on the project to verify that it conforms to the topsoil specifications. Test results shall include horticultural recommendations. The soil samples shall be obtained per the testing agency directions. Allow ten (10) working days to obtain test results. The costs for such testing shall be the responsibility of the Contractor.

B. Prior to delivery of the imported topsoil to the site, the Contractor shall provide to the Landscape Architect the name and location of the topsoil source, along with the certified soil analysis of the topsoil to be used. The analysis shall verify that the proposed topsoil meets the topsoil specifications, and is capable of supporting healthy plant growth.

C. The following procedure shall be followed in placing all topsoil:

1. All areas to receive topsoil which have a slope of less than ten (10) percent shall be cross-ripped to a depth of four (4) to six (6) inches.
2. The subgrade material shall be rough graded to plus or minus one tenth (±0.1) foot of the final rough grade, which will allow the Contractor to achieve final finished grade through the placement of the topsoil.
3. The surface of the subgrade shall be scarified to a depth of two (2) inches to provide a transition zone between the subgrade and the topsoil. Place the topsoil on the subgrade and fine grade to the final finished grade and topsoil depths as indicated on the drawings and in these specifications.
4. Any required soil amendments (i.e. mulch, organic matter, etc.) shall be placed directly on the topsoil at the required rates and spread evenly over the planting area. The amendments shall

then be thoroughly blended into the topsoil to a depth of four (4) inches. Where only a dry, granular fertilizer is to be added, it may be applied to the surface and raked in during the fine grading procedures.

D. The Contractor shall maintain a minimum of two (2) percent drainage away from all buildings, structures, and walls. Finished grades shall be smoothed to eliminate puddling or standing water.

E. All finished grades shall be approved in writing by the Owner prior to installation of any plant materials.

21.03.04 PLANT CONDITION

A. All precautions customary in commercial landscape installation practice shall be taken in preparing plants for planting. Workmanship that fails to meet these minimum standards shall be rejected. All balled and burlapped plants shall have firm and natural balls of earth around their roots. No plant shall be planted if the rootball is cracked or broken, either before or during the process of planting. Loose, broken or manufactured rootballs shall be rejected.

B. All plants materials in five (5) gallon containers or larger shall have been established in that container for a period of not less than six (6) months and not more than two (2) years. Plant material shall not be root bound. They shall exhibit sound, healthy, and vigorous growth and be free from diseases and pests.

C. The Contractor shall have the Landscape Architect approve plant material size and quality prior to installation. Any plants which are not true to form, appear stressed or unhealthy, are infested with pests, infected with disease, or are undersized for their containers shall be rejected.

D. All plant material shall be planted as soon upon arrival on the premises as possible. If planting cannot be done immediately, the roots shall be protected from the sun and kept in a moist condition until the time of planting. Such protection may be provided by laying the plants on the north side of the building and covering the roots with wet straw.

E. If it is anticipated that planting will not be done for more than twenty-four (24) hours after the arrival of plants upon the premises, the balled and burlapped stock shall be heeled-in on the north side of a building and all roots completely covered with dirt which shall be wetted down frequently. Care will be taken in the handling of all ball and burlap materials so that the earth around the roots is disturbed as little as possible.

21.03.05 PLACEMENT OF PLANTS

A. Plants shall be generally located as indicated by the drawing. The Contractor shall stake out the location of all plants and planting areas with identified plant stakes, and no excavation shall commence until such locations have been approved by the Landscape Architect.

B. In the event that underground construction work or obstructions are encountered during excavation of the plant holes, alternate locations will be assigned and approved by the Landscape Architect.

C. Except for turf and groundcovers, plants shall not be placed within twenty four (24) inches of sprinkler heads.

D. The Contractor must locate and stake any sprinkling head or valve box within 10' feet of proposed tree location, and must establish the direction of the lateral or main irrigation line that serves the staked sprinkler head or valve box. This procedure will help eliminate hitting underground irrigation pipes.

21.03.06 PLANT INSTALLATION

A. All concrete work, sprinkling systems, and finished grading shall be completed and approved by the Landscape Architect before any planting of the specified plant materials is begun.

B. No tree planting shall be initiated until sprinkling system is complete and tested. However, tree planting shall precede lawn planting.

C. Each plant will be placed in an individual plant pit. The sharing of pits shall not be allowed.

D. All trees and shrubs shall be planted in pits as detailed in the planting details contained herein or as noted on the drawings. Tree and shrub pits shall be circular in outline, with a diameter at least two (2) times the diameter of the rootball of each plant to be installed. They shall be one to two and one half (1 - 2 ½) inches shallower than the rootball depth. When the plant is properly placed in the plant pit, the root collar shall be approximately one (1) inch above finished grade. The sides of the plant pit shall be roughened, and not smooth or sculpted.

E. Plant backfill mix shall be one hundred (100) percent native site soil.

F. For container grown plants, remove the container and place the plant vertically in the plant pit, directly on undisturbed soil. The root crown or collar shall be at or just above the finished grade. Perennial and Ornamental Grass plants shall be planted with the root collar at finished grade.

G. For balled and burlapped plants, place the plant vertically in the center of the pit, with the rootball resting on undisturbed soil. Cut and remove the wire basket and burlap or other wrapping material from the rootball. This may be done with the rootball in the pit. Any burlap or wire pieces underneath the rootball may be left in place if they cannot be removed. Do not fold the burlap over, but cut away as much as possible without disturbing the rootball. No burlap shall be pulled from under the rootball. Backfill the bottom one third (1/3) of the pit as the wire and burlap are removed. In all cases, maintain the integrity of the rootball.

H. Specified backfill material shall be carefully and firmly worked and tamped under and around the rootball to fill all voids. When backfilled and compacted to two thirds (2/3) the depth of the pit, thoroughly water with a hose to completely soak the roots and remove any air pockets.

I. The plant pit shall then be completely backfilled with the specified backfill mix and tamped well. A shallow watering basin or rain cup shall be formed around each plant. This basin will be equal in diameter to that of the original planting pit.

J. Monitor all plants to insure that no settling occurs. Pits which settle shall be immediately filled with additional soil mixture at no additional expense to the City.

K. After planting, the following operations shall be performed:
   1. Stake and mulch all trees per installation details.
   2. Remove all nursery stakes ties, and tags from all plants. Prune and remove any dead, damaged, or broken branches. Maintain side growth on all trees.

21.03.07 STAKING

A. All trees, including evergreen trees, shall be staked.

B. Staking shall be performed as follows:
   1. Two (2) 2"x 2" square or 2” diameter round wood stakes, eight (8) feet in length, shall be used to support each tree planted under this contract unless otherwise indicated.
   2. Tree ties shall conform to the staking detail shown on the planting detail sheet.
   3. Each stake will be located adjacent to the rootball, on opposing sides, to provide maximum support to the trunk. Do not penetrate the rootball with the stake.
   4. The stakes will be driven into the pit bottom after the tree has been placed in the pit, but before backfilling begins so as to avoid damage to the roots.

C. Stakes and ties shall be removed after one (1) full growing season from the time the tree was installed.

21.03.08 WATERING

A. All plants shall be thoroughly watered immediately after planting. This shall mean full and thorough saturation of all backfill in the pits and beds during the same day of planting. Water shall be applied only by open end hose at very low pressure to avoid creating air pockets, causing injury to the plant, or washing away of backfill. When installed, watered, and fully settled, the plants shall be vertical.

B. Subsequent watering shall be provided by the site’s irrigation system. The Contractor shall insure that all plants, especially trees, receive sufficient water to maintain healthy growth and vigor. Overwatering shall be avoided, and prolonged saturation of the soil around the trees shall be eliminated by appropriately controlling the irrigation circuit which provides water to that area.

21.03.09 WEED BARRIER FABRIC

A. Prepare final grade prior to placing fabric. Placement of fabric shall comply with the following:
   1. Place pre-emergent herbicide prior to installing fabric.
   2. Install fabric directly on topsoil. With drip tubing, install tubing on top of fabric.
   3. Overlap and secure per manufacture’s recommendations.
   4. Cut an “X” where plant will be located. Peel back corners to allow plant installation. Fold corners back when plant is installed.

21.03.10 MULCHING

A. Shredded bark mulch shall be placed to a depth of three (3) inches on top of the topsoil in all planting beds and over tree planting pits.

B. The finished grade of the bark mulch shall be as follows:

1. Two (2) inches below the surface or finished grade of any paving, mowstrips, or walks adjacent to the planting area.
2. At adjacent finished grade of the turf surrounding tree planting pits.

C. In tree pits, the bark shall be kept six (6) inches away from the base of the tree.

D. Just prior to placement of the mulch, the Contractor shall treat the mulched areas with a pre-emergent herbicide according to the manufacturer's recommendations.

21.03.11 SOD INSTALLATION

A. Sod shall be obtained only from approved sources. The sod shall have been mowed regularly and carefully maintained from planting to harvest.

B. The sod shall be free of grassy and broad-leaf weeds, contain no bare or burned spots, and be clean and strongly rooted. It shall be of the varieties noted on the plans and notes.

C. The sod shall be cut using approved methods and equipment. It shall be cut in pieces not exceeding one (1) square yard, with a minimum of one (1) inch and maximum one and one half (1 ½) inch thickness. For very large turf areas and all athletic fields, large roles of sod shall be used. Sod shall be placed using equipment specifically designed to lay large sod roles.

D. The Contractor shall notify the Landscape Architect of the source of the sod prior to placement. The sod shall be stripped and delivered to the site not more than twenty four (24) hours prior to laying. The sod shall be maintained in a moist and healthy condition to encourage immediate growth.

E. The following procedure shall be followed when installing the sod:
1. Lay the sod on smooth, moist topsoil, working off planks if required.
2. Rake the topsoil to loosen and level prior to placing each course of sod.
3. Lay strips perpendicular to the direction of the slope. Strips shall be parallel to each other, with their end seams staggered. The sod shall be neither stretched nor overlapped, and all joints shall be butted tightly together.
4. Roll the sod immediately after placing and thoroughly water with a fine spray to a depth sufficient that the underside of the new sod and the soil immediately below the sod are thoroughly wet.
5. On slopes two (2) horizontal to one (1) vertical or steeper, lay the sod perpendicular to the slope and secure every row with wooden pegs at two (2) feet maximum on center. Drive the pegs flush with the soil portion of the sod.

21.03.12 HYDROSEEDING

A. General:
1. Wood fiber mulch shall be virgin wood fiber, free of growth- or germination- inhibiting substances. The mulch shall be air dried with not more than fifteen (15) percent moisture by weight. The total organic weight shall be a minimum of ninety eight (98) percent. Inorganic ash content shall be 0.7±0.2 percent. Water holding capacity shall be 1000G/100G (oven dried weight). The pH range shall be 4.0 - 6.0. The fiber length shall meet the following:
   a. Fifty (50) percent shall be at least 0.15 inches in length or longer.
   b. Fifty (50) percent shall be retained on the twenty eight (28) mesh screen.

   It shall be Echofiber or Conwed or approved equal.
2. The seed mix shall be as specified on the plans. Provide written certification that the seed conforms to Utah seed law and is in compliance with Utah State Department of Agriculture regulations.
3. The tackifier shall be M-Binder or Plantego or equal.
4. Application rates shall be as follows:
   a. Wood fiber mulch..... 50 pounds (min.)/1,000 SF
   b. Seed mix..... See plans (7 pounds/1,000 SF typ.)
   c. Tackifier ..... 100 pounds/Acre
   d. Fertilizer ..... 7 - 8 pounds/1,000 SF
   d. Water..... 92 gallons/1,000 SF

B. One-step preparation and application of hydroseed mulch shall be as follows:
1. The wood fiber mulch, seed, tackifier, fertilizer, and water shall be mixed together in a hydroseeding machine having a capacity of at least two thousand (2,000) gallons to allow for homogeneous slurry which is thoroughly mixed and can be applied easily without clogging. The machine shall be mounted on a traveling unit which is either self-propelled or drawn by a separate unit. Equipment used in the hydroseeding process shall be thoroughly cleaned of all

seed and other materials used in any previous hydroseeding process, prior to hydroseeding on this project.

2. The equipment shall have a built in agitation system and operating capacity sufficient to agitate, suspend, and homogeneously mix slurry containing not less than fifty (50) pounds of organic mulching amendment plus chemical additives and solids for each one hundred (100) gallons of water.
3. The slurry shall be prepared at the site and its components shall be mixed to supply the rates of application as specified. The slurry preparation shall begin by adding water to the tank when the engine is at one half (½) throttle. The engine throttle shall be open to full speed when the tank is one half (½) filled with water. All organic amendments, fiber, and chemicals shall then be added by the time the tank is two thirds (2/3) to three fourths (3/4) full. At this time and not before, the seed mix shall also be added. Spraying shall commence immediately when the tank is full and the slurry is mixed.
4. Apply the hydroseed to form even appearing cover over the required areas. The slurry shall be applied in a downward drilling motion via a fan stream nozzle. It is important to ensure that all of the components enter and mix with the soil. Use only qualified and trained personnel to insure uniformity of the hydroseed applications.
5. The hydroseeding slurry components shall not be left in the hydroseed machine for more than two (2) hours in order to avoid seed deterioration.

C. A two-step hydroseeding procedure may be used in lieu of the one-step method. The two-step procedure shall consist of first sowing the seed mix by broadcasting, and second, applying the hydromulch. Specifically, this procedure shall conform to the following:

1. The seed shall be broadcast over the planting bed at the rates noted in the plant schedule. The seed shall be sown in two (2) perpendicular directions with a cyclone seeder or other similar mechanical seeder. Lightly rake the seed into the soil.
2. Apply a fine spray watering immediately after each area has been sown.
3. Prepare and apply hydromulch slurry (minus the seed mix) according to the procedure outlined in 3.11 B, steps 1 through 5 above.

21.03.13 CLEAN UP

A. Throughout the course of planting, excess and waste materials as well as excavated subsoil shall be continuously and promptly removed. All areas shall be kept clear and all reasonable precautions taken to avoid damage to existing structures, plants, and grass.

B. When planting has been completed in an area, it shall be thoroughly cleaned of all debris, rubbish, subsoil, and waste materials. These shall be removed from the property and disposed of legally. All planting tools shall also be put away.

C. The ground surface shall be left in a condition satisfactory to the Landscape Architect.

21.03.14 AS-BUILT DOCUMENTS

A. The Contractor shall keep a record of all departures from the working drawings that occur during construction. These changes shall be shown on a clean set of prints, and the prints kept on the job site at all times for review.

B. As a part of his observation work, the Landscape Architect shall review the as-built drawings regularly to verify that changes are being recorded. At the conclusion of the work, the Contractor shall present the drawings to the Landscape Architect and they shall become part of the permanent record of the project.

21.03.15 MAINTENANCE

A. Substantial Completion:

1. At substantial completion of all planting work outlined in these plans, the Contractor shall contact the City to arrange for a walk through to verify that all aspects of the work have been completed. Work must be fully completed (except for final clean-up) according to all plans, notes, and specifications and exhibit professional workmanship. Substantial completion shall be defined as the complete installation of all plant materials, staking, mulching, and other work on the project in its entirety. Substantial completion shall not be given on designated portions of the project.
2. Notice by the Contractor shall be given, in writing, at least three (3) days in advance to the Landscape Architect so that proper scheduling can be made for those who are to attend.

3. At the appointed time, an inspection of all plant materials, including staking and mulching, shall be made.
4. A list of uncompleted items (punch list) shall be generated by the Landscape Architect and distributed to the Contractor and other involved parties within three (3) days of the substantial completion inspection. Each item on the punch list shall be corrected before the project will be approved and accepted by the Landscape Architect. The Contractor will be back charged for time spent by the Owner and any consultants who have been brought to the site for a final inspection when the project is not ready for said inspection.

B. Maintenance/Establishment Period:
1. The maintenance/establishment period shall begin one (1) day after the substantial completion inspection. The Contractor shall complete all punch list items during this period, as well as maintain and operate the entire irrigation system.
2. In cases where the maintenance/establishment period runs beyond October 15 of any given year, the balance of the maintenance/establishment period days shall be extended into the spring of the following year. Counting of the balance of days shall begin no sooner than April 15, unless mutually agreed upon by both the Contractor and the City prior to that date. Early counting shall be based on weather conditions at the time.
3. The Contractor shall maintain all plantings until the turf is fully established. The turf shall be considered fully established when grass stands come in uniform and thick, with no bare or thin spots, and roots have begun to spread and knit together. No weeds shall be allowed in the grass. . If the turf grass is hydroseeded, the Contractor must complete the hydroseeding by September 1. The maintenance/establishment period shall be a minimum period of sixty (60) days.
4. The maintenance work required shall include but not be limited to the following:
   a. Appropriate watering of all plant materials.
   b. Weeding and removal of all weeds from groundcover and planting areas.
   c. Replacement of any dead, dying, or damaged trees, shrubs, perennials, or groundcover.
   d. Filling and replanting of any low areas which may cause standing water.
   e. Adjusting or sprinkler head heights and watering patterns.
   f. Filling and recompaction of eroded areas, along with any required reseeding and/or replanting.
   g. The grass shall be mowed when the blades reach three (3) inches tall and maintained to a minimum height of two (2) inches. No more than one third (1/3) of the blade shall be removed per cutting. The cutting frequency shall be once every five (5) to seven (7) days depending upon grass height and growth rate.
   h. Weekly removal of all trash, litter, clippings, and all foreign debris.
   i. At thirty (30) days after planting, a balanced fertilizer (16-16-16) shall be applied to the grass areas at a rate of one half (½) pound of nitrogen per one thousand (1,000) square feet.
   j. At intervals of thirty (30) days after the first application of fertilizer to the grass, apply a balanced fertilizer (16-16-16) at a rate of one half (½) pound of nitrogen per one thousand (1,000) square feet until the grass is established.

C. Final Acceptance:
1. A final inspection shall be held prior to the end of the maintenance period to insure that all punch list items have been completed and the entire project is ready for acceptance by the Owner.
2. Upon satisfaction that the Contractor has completed all punch list items, the irrigation system is fully and completely functional, and the required As-Built drawings, mylars and maintenance manuals have been submitted, the Owner shall accept the project.
3. An official letter of final acceptance shall be prepared and issued to the Contractor, designer, and the Landscape Architect. Upon final acceptance of the project by the Landscape Architect, the Owner shall assume full responsibility for the project, and the guarantee period shall begin.

21.03.16 GUARANTEE

A. Upon final acceptance of the project as being properly installed, the Contractor shall guarantee the plant materials as follows:
1. All shrubs and groundcovers shall be guaranteed by the Contractor as to growth and health for a period of sixty (60) days after completion of the maintenance period and final acceptance.

2. All trees shall be guaranteed by the contractor to thrive and grow in an acceptable upright position for a period of one (1) year after completion of the maintenance period and final acceptance.

B. The Contractor shall, within fifteen (15) days after receiving written notification by the Landscape Architect, remove and replace all guaranteed plant materials which die or become unhealthy or appear to be in a badly impaired condition at any time during the guarantee period. Any plants that settle below or rise above the desired finished grade shall also be reset to the proper grade.

C. All replacements shall be plants of the same kind, size, and quality as originally specified in the "plant list" and they shall be furnished, planted, staked, and maintained as specified herein at no additional cost.

D. The Contractor will not be responsible for plants destroyed or lost due to occupancy of the project, vandalism on the part of others, or improper maintenance or lack thereof.

E. At the conclusion of the guarantee period and prior to final inspection of the plant materials by the Landscape Architect, the Contractor shall remove all tree stakes. This period of time shall be approximately 1 year after initial planting.

1. Stakes shall be removed by first cutting the ties securing the tree to stakes and secondly pulling stakes or guys out of the ground.
2. Stakes shall not be broken off above, at, or below ground levels but removed completely.

F. At the conclusion of the guarantee period a final inspection of all planting included in this contract shall be made by the Landscape Architect. At that time any plant found to be unhealthy, broken, damaged, or otherwise in an impaired condition shall be noted. Plants so noted shall be removed immediately from the site by the Contractor and replaced by him, as specified under this section, with plants of like kind and size in the manner previously specified for the original planting without extra compensation.

DIVISION 22: CHAIN LINK FENCING

PART 1 GENERAL

22.01.01 SUMMARY

A. Section includes:
   1. Chain link fencing fabric, posts, braces, anchorage, gates, miscellaneous hardware and appurtenances.

22.01.02 REFERENCE STANDARDS

A. ASTM A 53: Standard Specification for Pipe, Steel, Black and Hot-Dipped, Zinc-Coated, Welded and Seamless.
B. ASTM A 121: Standard Specification for Zinc-Coated (Galvanized) Steel Barbed Wire.
C. ASTM A 392: Standard Specification for Zinc-Coated Steel Chain-Link Fence Fabric.
D. ASTM A 491: Standard Specification for Aluminum-Coated Steel Chain-Link Fence Fabric.
E. ASTM A 585: Standard Specification for Aluminum-Coated Steel Barbed Wire.
F. ASTM A 641: Standard Specification for Zinc-Coated (Galvanized) Carbon Steel Wire.
G. ASTM F 567: Standard Practice for Installation of Chain-Link Fence.
H. ASTM F 573: Standard Specification for Residential Zinc-Coated Steel Chain-Link Fence Fabric.
I. ASTM F 626: Standard Specification for Fence Fittings.
J. ASTM F 654: Standard Specification for Residential Chain-Link Fence Gates.
K. ASTM F 668: Standard Specification for Poly(Vinyl Chloride)(PVC)-Coated Steel Chain-Link Fence Fabric.
L. CLFMI: Chain Link Fence Manufactures Institute Product Manual for Chain Link Fence Installation.

22.01.03 SUBMITTALS

A. Drawings: Indicate plan layout, grid, size and spacing of components, accessories, fittings, anchorage, and post section.
B. Data: Submit manufacturer's installation instructions and procedures, including details of fence and gate installation.
C. Submit sample for fence fabric and typical accessories.

PART 2 PRODUCTS

22.02.01 GENERAL

A. Galvanizing: Class 3 per ASTM A 121.
B. Aluminizing: Class 2 per ASTM A 585.
C. Polyvinyl Chloride (PVC): With PVC coated materials, paint all posts, fittings, hardware and accessories as indicated to match PVC color. The fabric shall be hot-dipped galvanized steel wire complying with ASTM A 392 and coated with a continuous PVC bonding process (minimum 15 mil thickness) in accordance with ASTM F 668. Color of PVC coating shall be as indicated, and applied free of voids, cracks, tears, and shall have a smooth and lustrous surface.
D. Steel: Schedule 40 per ASTM A 53.
E. Concrete: Class 3000 minimum, per Cast-in-Place Concrete Section.

22.02.02 CHAIN LINK FABRIC

A. 11 gauge steel wire fabric for all fences equal to or less than sixty (60) inches in height and 9 gauge for fences over sixty (60) inches coated as follows:
   1. Zinc coating per ASTM A 392 requirements.
   2. Aluminum coating per ASTM A 491 requirements.
   3. Polyvinyl chloride coating par ASTM F 668 requirements.
B. For residential fabric, provide zinc coated fabric per ASTM F 573 requirements.
C. Unless indicated otherwise, use chain link fabric that has approximately two (2) inches square mesh and coated after fabrication.

D. Knuckle finish top edge and twist and barb bottom edge of fabric less than sixty (60) inches wide. For fabric sixty (60) inches or grater in width, knuckle both top and bottom edges. Provide fabric that barbing has been done by cutting the wire on the bias.

E. If indicated, insert slats in fabric.

22.02.03 BARBED WIRE

A. Two strand, 12-1/2 gauge wire with 14 gauge, 4 point round barbs spaced approximately five (5) inches on center.

22.02.04 TENSION WIRES AND FABRIC TIES

A. Tension Wires: 7 gauge galvanized coil spring steel wire per ASTM A 641 requirements.

B. Fabric Fasteners: 9 gauge galvanized or 6 gauge aluminum wire, or approved non-corrosive metal bands, for ties to fasten fabric to posts, rails, and gate frames. Fasten fabric to bottom tension wire spaced twenty four (24) inches on center.

22.02.05 TRUSS OR TENSION BARS

A. Galvanized steel rod 3/8 inch diameter for truss or tension bars used in trussing gate frames and line posts adjacent in end, corner, slope, or gate posts. When used in trussing line posts, provide adjustment by means of galvanized turnbuckles or other suitable tightening devices.

B. Tension Bars:

1. Galvanized high carbon steel bars not smaller than 3/16 inch x ¾ inch for tensions bars to fasten fabric to end and corner posts and gate frames. Provide one (1) tension bar for each end post and two (2) for each corner and pull post per section of fabric.
2. Use tension bar bands made from heavy pressed galvanized steel spaced on fifteen (15) inch centers to secure tension bars to posts.

22.02.06 POSTS, CAPS, RAILS, COUPLINGS

A. Posts: Galvanized Schedule 40 steel, at the indicated length.

B. Caps: Pressed galvanized steel or malleable iron designed for fit securely over post ends forming a weather tight closure. Where a top rail is used, provide cap to permit passage of top rail. "H" section posts do not require caps.

C. Top, Intermediate, and Bottom Rails: Galvanized steel, in lengths as required. Provide joint couplings to connect rails securely. Provide means for attaching top rail securely to each end, corner, line, slope, and gate posts.

D. Joint Coupling: Galvanized steel, six (6) inches long minimum for each joint. One (1) coupling in five (5) shall have expansion spring. Couplings shall be outside sleeve type with bore of sleeve true to maintain adjacent lengths of rail in alignment.

Table 1 – Posts, Frames, Stiffeners, Rails

Proposed Use	Nominal Type and Size
End, corner, slope, and gate posts for single gates 6 feet or less in width and double gate 12 feet or less in width for: 1. Fence less than 72 inches high 2. Fence 72 inches or higher	 2 3/8" OD Pipe 2 7/8" OD Pipe
Gate posts for single swing gate over 6 feet, but not over 13 feet in width and double swing gates over 12 feet, but not over 26 feet in width or for all slide gates with leaves larger than 6 feet	4" OD Pipe
Gate posts for single swing gates over 13 feet, but not over 18 feet in width and double swing gates over 26 feet, but not over 36 feet in width; backstop posts	6 5/8" OD Pipe
Gate posts for single swing gates over 18 feet in width and double swing gates over 36 feet	8 5/8" OD pipe

Frame for gates	1 7/8” OD pipe
Stiffeners for gates	1 5/8” OD pipe
Line posts for fence 72 inches or higher	2 3/8” OD pipe
Line posts for fences less than 72 inches high	1 7/8” OD pipe
Top Rail	1 5/8”OD pipe or 1 ½”x1 5/8” “H”
Bottom Rail	7 gauge, coiled spring steel tension wire

22.02.07 FITTINGS AND HARDWARE

A. Unless indicated otherwise, galvanize fittings and hardware.

B. Rivets: Make all hardware attachments with galvanized steel rivets.

22.02.08 SUPPORT OR EXTENSION ARM

A. Use support or extension arms for barbed wire that are of a type that can be attached to the tops of the posts and carry the number of wires indicated.

B. Use only support arms on the fence foe barbed wire that are capable of supporting a 250 pound vertical load at the end of the arm without causing permanent deflection.

C. Single support arms are to be integral with a top post weather cap and have a hole for passage of the top rail when required.

22.02.09 GATES

A. Residential gates: Refer to ASTM F 654 requirements.

B. Provide additional horizontal and vertical members to ensure proper gate operation and for attachment of fabric, hardware and accessories.

C. Assemble gate frames and attach hardware by welding or by using fittings and rivets to make rigid connections. Use same fabric as for fence. Install fabric with stretcher bars to gate frame at not more than fifteen (15) inches on center.

D. Provide diagonal cross-bracing consisting of 3/8 inch diameter adjustable length truss rods on gates where necessary to prevent frame from sagging or twisting.

22.02.10 GATE HARDWARE

A. Hinges: Pressed steel or malleable iron to suit gate sizes, non-lift-off type, offset to permit 180 degree gate opening. Provide minimum of one pair of hinges for each leaf.

B. Latch: Forked steel type or plunger-bar steel type to permit operation from either side of gate. Provide locking device and padlock eye as integral part of latch.

C. Keeper: Provide keeper for all vehicle gates which automatically engages the gate leaf and holds it in the open position until manually released.

D. Gate Stops: Mushroom type or flush plate with anchors set in concrete to engage the center drop rod or plunger bar.

22.02.11 ALTERNATIVE FINISHES

A. Where a colored finish other than galvanized is desired, the following shall apply:

1. All metal posts, caps, rails, and hardware (excepting fabric) shall be painted.
2. Where paint is applied to a galvanized surface, the paint shall be a modified phenolic alkyd type (Valley Paint V-101 or approved equal) or an acrylic type (Valley Paint 2532 Valcryl or approved equal) or Aquapon. Owner shall select the desired color. Color shall generally be selected to match color of vinyl clad fencing.
3. Where paint is applied directly to a metal surface (non-galvanized), an industrial strength steel primer shall first be applied per manufacturer’s specifications. The steel surface shall be properly prepared prior to painting by first grinding all welds smooth and even, insuring that no holes or pits are present due to welding or any other cause, removing all rust and corrosion, and then applying primer.

PART 3 EXECUTION

22.03.01 PREPARATION

A. Coordinate utility location. Follow Coordination Section.
B. Excavate per Excavation Section requirements.
C. Refer to ASTM F 567 requirements and CLFMI products manual for chain link fence installation.
D. Protect existing trees.
E. Limit the amount of clearing and grading along the fence line to permit proper installation.

22.03.02 LAYOUT OF WORK

A. Accurately locate and stake location and points necessary for installation of fence and gates.
B. General arrangements and location of fence and gates are indicated. Install except for minor changes required by unforeseen conflicts with work of other trades.

22.03.03 INSTALLATION OF POSTS

A. Space line posts as follows:
   1. Tangent sections to 500 feet radius: 10 feet maximum.
   2. 200 feet radius to under 500 feet radius: 8 feet maximum.
   3. 100 feet radius to under 200 feet radius: 6 feet maximum.
   4. Under 100 feet radius: 5 feet maximum.
B. Provide pull posts at 500 feet maximum intervals. Changes in line of 30 degrees or more are considered corners.
C. Set all posts to true line and grade in concrete bases or in approved pipe sleeves or sockets. Check for vertical and horizontal alignment.
D. Posts shall have concrete bases of at least ten (10) inches in diameter. Place a minimum of six (6) inches concrete below each post. Depth of post in concrete shall be as follows:
   1. Line Posts: 18 inches.
   2. End, Pull, Corner, and Gate Posts of less than 6 inches Diameter: 24 inches
   3. Gate posts: 30 inches.
E. Where posts are required to be set in concrete walls or masonry, set sockets for the posts to a depth of at least 18 inches. Use sockets that consist of lengths of 0.048 inch galvanized metal pipe sleeves, with an inside diameter sufficient to allow the posts to fit loosely therein. Coat the inside of the socket and outside of the posts with an approved bituminous paint. Caulk the posts securely in place with lead wool.

22.03.04 INSTALLATION OF BRACE ASSEMBLIES

A. Attached horizontal brace rail from the mid-point of end, pull, corner, or gate posts to the mid-point of the first ensuing line post as a compression member. Install braces from top of said line posts back to the bottom of the end, pull, corner, or gate post with steel truss rods and turnbuckles so posts are plumb when diagonal truss rod is under proper tension.

22.03.05 INSTALLATION OF RAILS

A. Install rails level and plumb with grade between posts and attached to posts before stretching fabric. Top rails shall form continuous brace from end-to-end of each run of fence.

22.03.06 INSTALLATION OF FENCE FABRIC

A. Place fence fabric on the security side of posts unless otherwise specified. Place fabric approximately one (1) inch above the ground. Maintain a straight grade between posts by excavating high pints of the ground. Filling depressions with soil will be permitted only upon approval of Engineer.
B. Stretch the fabric taut and securely fasten to posts. Fasten to end, gate, corner, and pull posts. Secure stretcher bars with metal bands spaced at fifteen (15) inch intervals. Cut the fabric and fasten each span independently at all pull and corner posts. Fasten to line posts with tie wire, metal bands, or other approved methods at fifteen (15) inch intervals. Attach the top edge of fabric to the top rail or tension cable at approximately twenty four (24) inches intervals. Attach bottom tension wire to fabric with tie wires at twenty four (24) inch intervals and secure to the end of pull posts with brace bands.

C. Draw wire to assure minimum sag at high temperature and no breakage at low temperature. Connect the wires and arms by means of 0.142 gauge galvanized wire stays.

22.03.07 INSTALLATION OF GATES

A. Install gates plumb, level, and secure for full opening without interference. Install ground-set items in concrete for anchorage as recommended by the fence manufacturer. Adjust hardware for smooth operation.

22.03.08 REPAIR DAMAGED COATING

A. Grind smooth and wire brush all welds made after galvanizing to remove loose or burned zinc coating, after which neatly coat the areas with 50-50 solder or as otherwise directed by the Engineer. Make repairs to abraded or otherwise damaged zinc coating in a similar manner. Replace PVC coating.

22.03.09 INSTALLATION OF CONCRETE MOWSTRIP

A. Where a concrete mow-strip is specified to be installed at the base of a chain link fence, it shall be installed at a minimum dimension of 12 inches wide and 6 inches thick. Fence posts shall be centered in the mow-strip. Joints in the mow-strip shall be struck at each fence post.

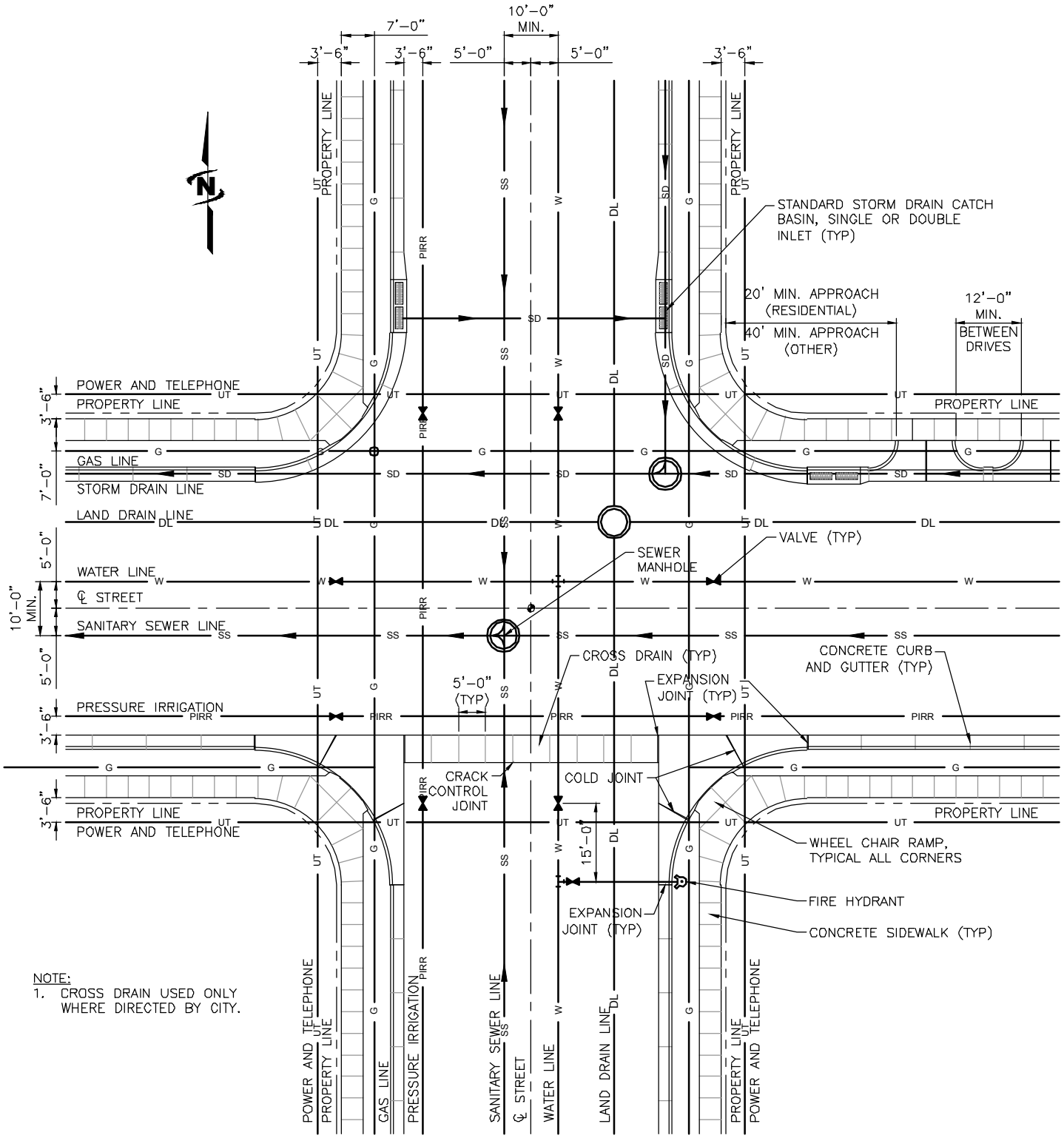

NOTE:
1. CROSS DRAIN USED ONLY WHERE DIRECTED BY CITY.

TYPICAL STREET IMPROVEMENTS AND UTILITY LOCATIONS DETAIL

SCALE: NOT TO SCALE

STATEMENT OF USE

THIS DOCUMENT AND ANY ILLUSTRATIONS HEREON ARE PROVIDED AS STANDARD CONSTRUCTION DETAILS WITHIN SYRACUSE CITY. DEVIATION FROM THIS DOCUMENT REQUIRES APPROVAL OF SYRACUSE CITY. SYRACUSE CITY CORPORATION CAN NOT BE HELD LIABLE FOR MISUSE OR CHANGES REGARDING THIS DOCUMENT.

NO.	REVISION DESCRIPTION	BY	APR.	DATE

CAD FILE: SYRACUSE CITY STANDARDS
DRAWN BY: JDM/ELC
DESIGN BY: NQS
CHECKED BY: RCW
LAST UPDATED: 10/28/2011
DATE ADOPTED: XX/XX/XX

SYRACUSE EST. CITY 1935

DEVELOPMENT STANDARDS
SYRACUSE CITY CORPORATION

STANDARD STREET IMPROVEMENTS AND UTILITY LOCATIONS

SHEET 1

Plot Date: 11/7/2011 10:35 AM Plotted By: Kurt S. Fredericks
File Path: C:\STANDARDS\CITY STANDARDS\PRIVATE STANDARDS\SYRACUSE SYRACUSE CITY STANDARDS.DWG

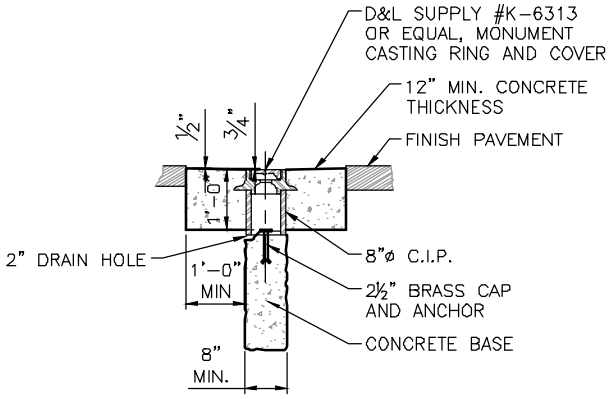

SURVEY MONUMENT SECTION

SCALE: NOT TO SCALE

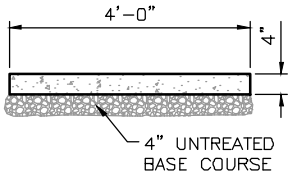

NOTES:
1. CRACK CONTROL JOINTS AT 4 FT.
2. EXPANSION JOINTS AT 32 FT.
3. 6" CONCRETE THICKNESS THRU DRIVEWAYS AND DESIGNATED VEHICLE CROSSINGS.
4. SIDEWALK MAY BE WIDER WHERE SPECIFIED BY CITY ENGINEERING DEPARTMENT.

SIDEWAL SECTION

SCALE: NOT TO SCALE

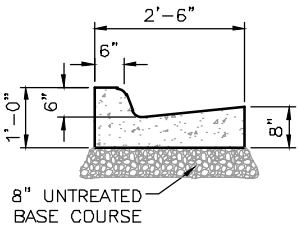

NOTES:
1. CRACK CONTROL JOINTS AT 10 FT.
2. EXPANSION JOINTS AT 50 FT.

CURB AND GUTTER SECTION

SCALE: NOT TO SCALE

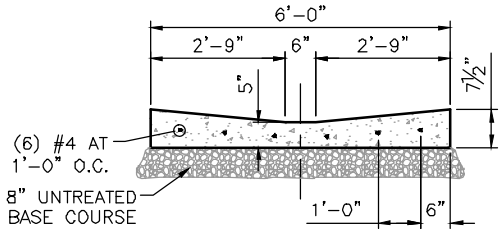

NOTES:
1. CONSTRUCTION AND EXPANSION JOINTS AT 5 FT.
2. EXPANSION JOINTS AT EDGE OF APRON.
3. CROSS DRAIN USED ONLY WHERE DIRECTED BY CITY.

CROSS DRAIN SECTION

SCALE: NOT TO SCALE

NOTES:
1. SURFACE SET 1/2" BELOW ASPHALT SURFACE OR MATCH CONCRETE PAVEMENT SURFACE

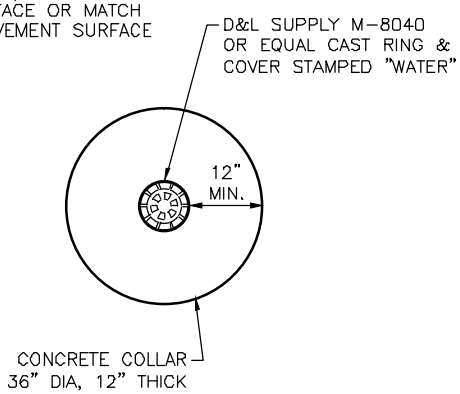

WATER VALVE BO

SCALE: NOT TO SCALE

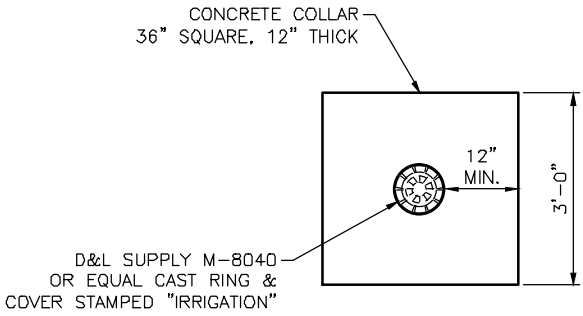

NOTES:
1. SURFACE SET 1/2" BELOW ASPHALT SURFACE OR MATCH CONCRETE PAVEMENT SURFACE

6 IRRIGATION VALVE BO

SCALE: NOT TO SCALE

STATEMENT OF USE

THIS DOCUMENT AND ANY ILLUSTRATIONS HEREON ARE PROVIDED AS STANDARD CONSTRUCTION DETAILS WITHIN SYRACUSE CITY. DEVIATION FROM THIS DOCUMENT REQUIRES APPROVAL OF SYRACUSE CITY. SYRACUSE CITY CORPORATION CAN NOT BE HELD LIABLE FOR MISUSE OR CHANGES REGARDING THIS DOCUMENT.

NO.	REVISION DESCRIPTION	BY	APR.	DATE

CAD FILE: SYRACUSE CITY STANDARDS
DRAWN BY: JDM/ELC
DESIGN BY: NQS
CHECKED BY: RCW
LAST UPDATED: 10/28/2011
DATE ADOPTED: XX/XX/XX

SYRACUSE EST. CITY 1935

DEVELOPMENT STANDARDS
SYRACUSE CITY CORPORATION

STREET IMPROVEMENT SECTIONS

SHEET 2

Plot Date 11/7/2011 10:35 AM Plotted By: Kurt S Fredericks
File Path: F:\STANDARDS\CITY STANDARDS\PDF\TEC STANDARDS\SYRACUSE SYRACUSE CITY STANDARDS.DWG

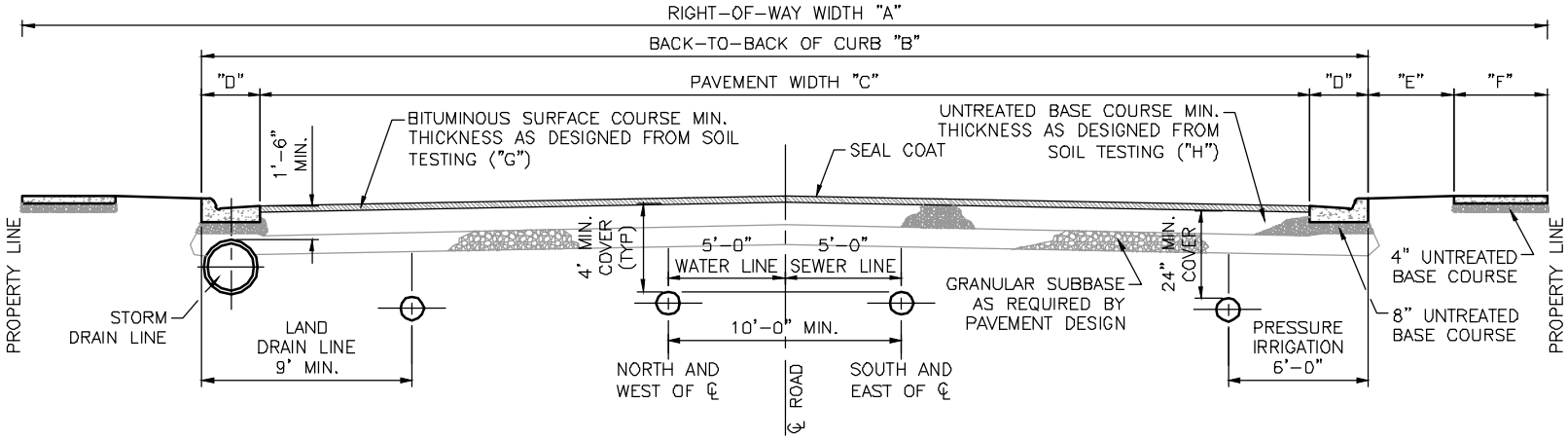

TYPICAL STREET DIMENSIONS								
STREET DESIGNATION	"A"	"B"	"C"	"D"	"E"	"F"	"G"	"H"
ARTERIAL	110	91'	86'	2.5'	*3.0'	*4.0'	NOTE 2	NOTE 2
MINOR ARTERIAL	84'	66'	61'	2.5'	*5.0'	4.0'	NOTE 2	NOTE 2
MAJOR COLLECTOR	72'	62'	57'	2.5'	0.0'	5.0'	NOTE 2	NOTE 2
MINOR COLLECTOR	66'	46'	41'	2.5'	*6.0'	4.0'	NOTE 2	NOTE 2
LOCAL	60'	40'	35'	2.5'	*6.0'	4.0'	*3"	*10"
LOW VOLUME LOCAL	60'	30'	25'	2.5'	*11.0'	4.0'	*3"	*10"
*MINIMUM REQUIREMENT								

NOTES:
1. TOP BACK OF CURB ON BOTH SIDES OF ROAD TO BE SAME ELEVATIONS.
2. THE CITY ENGINEER SHALL VERIFY PAVEMENT DESIGN PRESCRIBED BY SOILS REPORT (SEE SPECIFICATIONS).
3. COMMERCIAL AND INDUSTRIAL STREET SECTIONS ARE DETERMINED BASED ON A TRAFFIC ANALYSIS FOR THE PARTICULAR USE.
4. VARIATIONS IN TYPICAL STREET DIMENSIONS MAY BE CONSIDERED BY THE CITY WHERE PHYSICAL CONSTRAINTS OF THE NATURAL LAND OR CREATING ENHANCEMENTS WOULD PREVENT THE ABILITY TO FOLLOW ESTABLISHED DIMENSIONS.

STANDARD STREET SECTION
SCALE: NOT TO SCALE

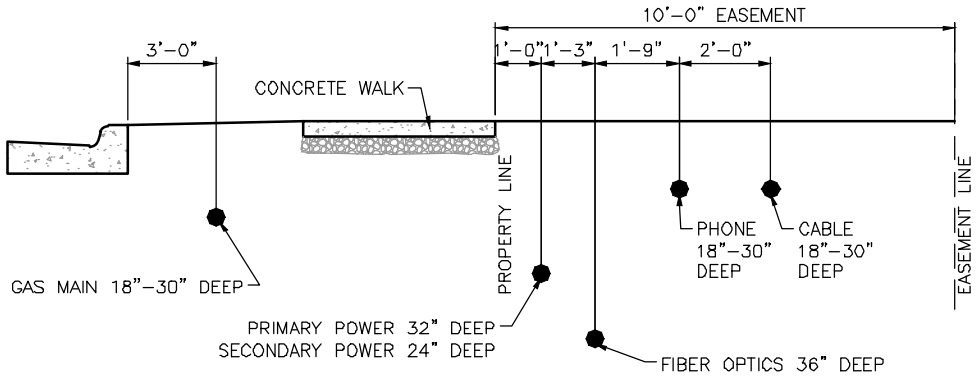

A UTILITY EASEMENT SECTION
SCALE: NOT TO SCALE

LOW VOLUME LOCAL STREET DESIGN MAY ONLY BE USED WHEN THE FOLLOWING CRITERIA IS SATISFIED:

1. TRAFFIC VOLUME IS 400 VEHICLES PER DAY OR LESS.
2. PARKING IS PROHIBITED ON THE STREET. OFF STREET PARKING DEMANDS MUST BE SATISFIED.

TYPICAL SEAL COAT APPLICATIONS

TYPE 1 SLURRY: PARKING LOT, PAVED TRAIL
TYPE 2 SLURRY: LOW VOLUME LOCAL, LOCAL STREET
TYPE 3 SLURRY: COLLECTOR, ARTERIAL STREET
CHIP & FOG: COLLECTOR, ARTERIAL

OTHER SURFACE TREATMENTS MAY BE CONSIDERED AND DETERMINED NECESSARY BY THE CITY.

STATEMENT OF USE
THIS DOCUMENT IS A PART OF THE STANDARD CONSTRUCTION DETAILS WITH IN SYRACUSE CITY. DEVIATION FROM THE DOCUMENT REQUIRES APPROVAL OF SYRACUSE CITY. SYRACUSE CITY ENGINEERING MAY CHANGE, MODIFY OR ELIMINATE REQUIREMENTS IN THIS DOCUMENT.

NO.	REVISION DESCRIPTION	BY	APR.	DATE

CAD FILE: SYRACUSE CITY STANDARDS
DRAWN BY: JDMELC
DESIGN BY: NDS
REVIEWED BY: RGW
LAST UPDATED: 10/28/21
DATE ADOPTED: XX/XX/XX

SYRACUSE CITY EST 1935

DEVELOPMENT STANDARDS
SYRACUSE CITY CORPORATION

STANDARD STREET SECTION

SHEET 3

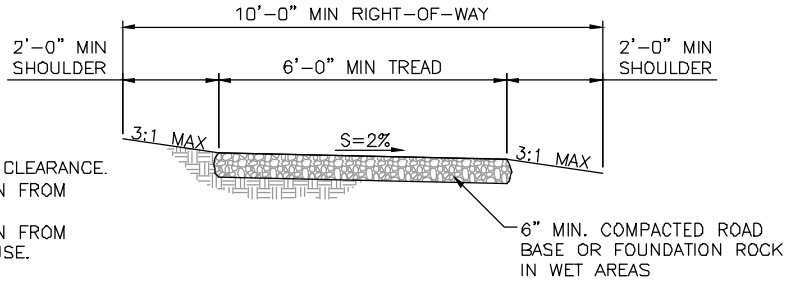

NOTES:

1. MAINTAIN 10' MIN VERTICAL CLEARANCE.
2. MAINTAIN 3' MIN SEPARATION FROM VERTICAL WALL OR FENCE.
3. MAINTAIN 4' MIN SEPARATION FROM TRAILS ALLOWING BICYCLE USE.

STANDARD EQUESTRIAN TRAIL SECTION

SCALE:NOT TO SCALE

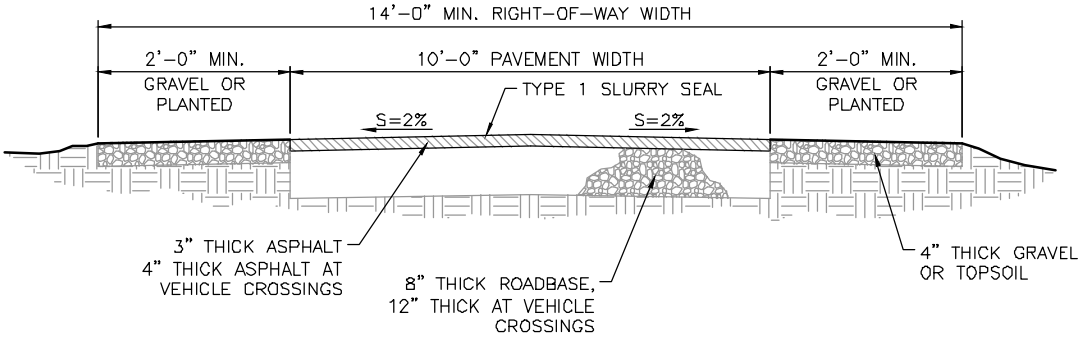

NOTE:
CROWN IN ASPHALT IS NOT REQUIRED. A 2% CROSS-SLOPE IS REQUIRED WITH OR WITHOUT A CROWN IN THE ASPHALT. CROSS-SLOPES WITHOUT A CROWN MUST BE SLOPED IN A DIRECTION TO DIRECT SURFACE WATER TOWARD THE NEAREST STORM DRAIN COLLECTION.

STANDARD TRAIL SECTION

SCALE:NOT TO SCALE

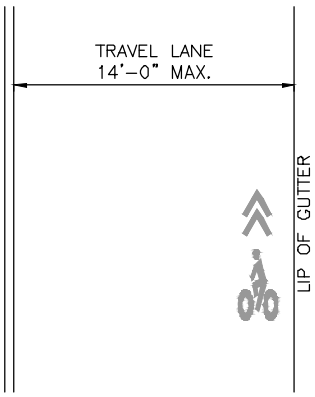

SHARED LANE

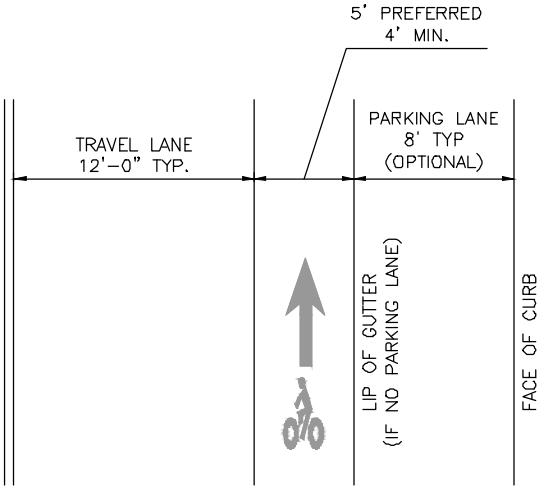

DESIGNATED BICYCLE LANE

BICYCLE LANE DETAIL

SCALE:NOT TO SCALE

STATEMENT OF USE
THIS DOCUMENT AND ANY ILLUSTRATIONS HEREON ARE PROVIDED AS STANDARD CONSTRUCTION DETAILS WITHIN SYRACUSE CITY. DEVIATION FROM THIS DOCUMENT REQUIRES APPROVAL OF SYRACUSE CITY. SYRACUSE CITY CORPORATION CAN NOT BE HELD LIABLE FOR MISUSE OR CHANGES REGARDING THIS DOCUMENT.

NO.	REVISION DESCRIPTION	BY	APR.	DATE

CAD FILE: SYRACUSE CITY STANDARDS
DRAWN BY: JDM/ELC
DESIGN BY: NQS
CHECKED BY: RCW
LAST UPDATED: 11/1/2011
DATE ADOPTED: XX/XX/XX

SYRACUSE EST. CITY 1935

DEVELOPMENT STANDARDS
SYRACUSE CITY CORPORATION

STANDARD TRAIL SECTION

SHEET 4

Plot Date: 11/7/2011 10:56 AM Plotted By: Kurt S Fredericks
File Path: C:\STANDARDS\CITY STANDARDS\UPDATED STANDARDS\SYRACUSE SYRACUSE CITY STANDARDS.DWG

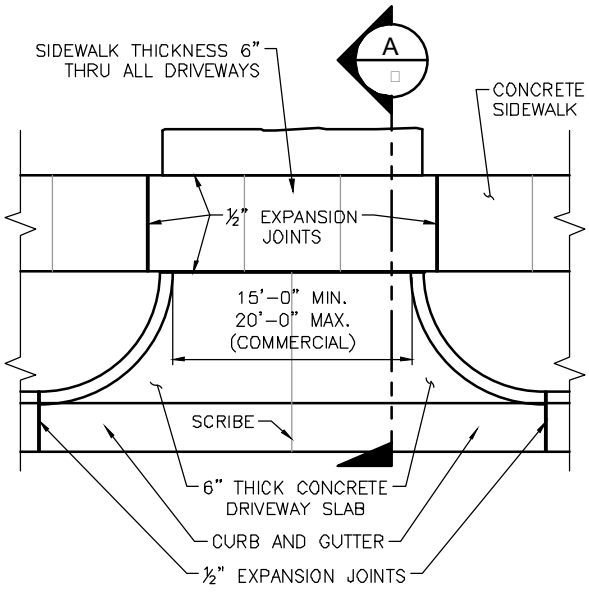

ONE WAY TRAFFIC

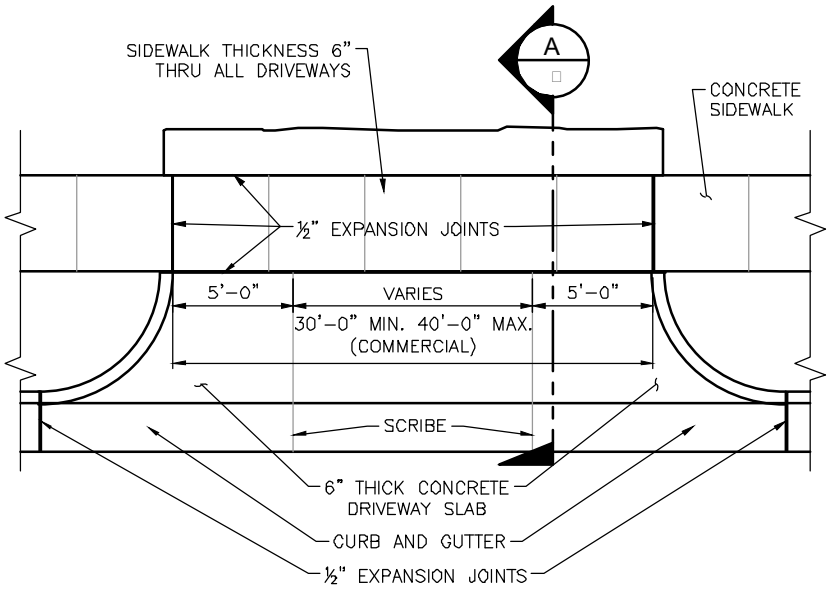

TWO WAY TRAFFIC

TYPE □ DRIVEWAY APPROACH DETAIL

SCALE:NOT TO SCALE □PREFERRED STYLE FOR COMMERCIAL DEVELOPMENT□

NOTE:

1. SCRIBE SIDEWALK ½" DEPTH AT EACH 4'-0".
2. EXPANSION JOINT AT EACH 32'-0".
3. CURB AND GUTTER EXPANSION JOINT AT EACH 50'.
4. CURB AND GUTTER CONSTRUCTION JOINT AT EACH 10'.

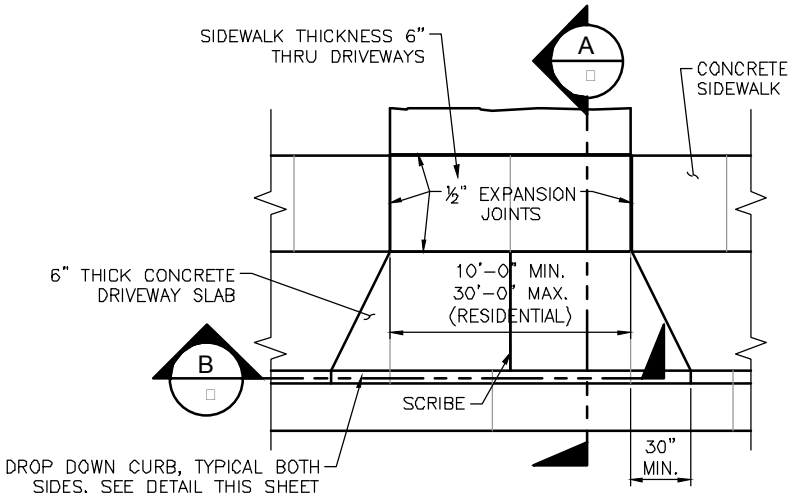

TYPE □ DRIVEWAY APPROACH DETAIL

SCALE:NOT TO SCALE □PREFERRED STYLE FOR RESIDENTIAL DEVELOPMENT□

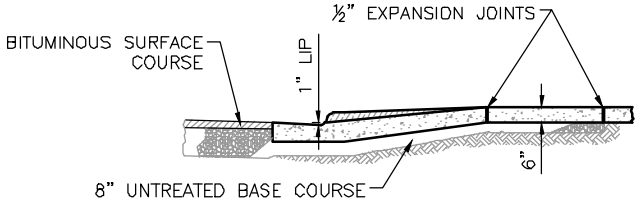

A DRIVEWAY APPROACH SECTION

SCALE:NOT TO SCALE

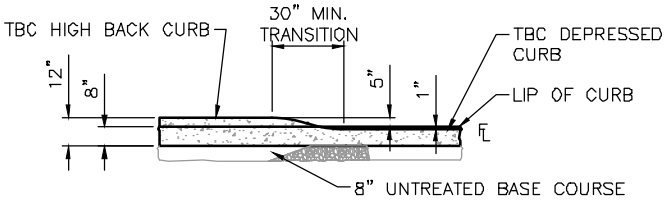

B DRIVEWAY APPROACH SECTION

SCALE:NOT TO SCALE

STATEMENT OF USE

THIS DOCUMENT AND ANY ILLUSTRATIONS HEREON ARE PROVIDED AS STANDARD CONSTRUCTION DETAILS WITHIN SYRACUSE CITY. DEVIATION FROM THIS DOCUMENT REQUIRES APPROVAL OF SYRACUSE CITY. SYRACUSE CITY CORPORATION CAN NOT BE HELD LIABLE FOR MISUSE OR CHANGES REGARDING THIS DOCUMENT.

NO.	REVISION DESCRIPTION	BY	APR.	DATE

CAD FILE: SYRACUSE CITY STANDARDS
DRAWN BY: JDM/ELC
DESIGN BY: NQS
CHECKED BY: RCW
LAST UPDATED: 11/1/2011
DATE ADOPTED: XX/XX/XX

SYRACUSE EST. CITY 1935

DEVELOPMENT STANDARDS
SYRACUSE CITY CORPORATION

DRIVEWAY DETAILS

SHEET 5

Plot Date 1/7/2011 10:20 AM Plotted By: Kurtis Fasenmyer
File Path: C:\STANDARDS\CITY STANDARDS\UPDATED STANDARDS\SYRACUSE SYRACUSE CITY STANDARDS.DWG

CUL-DE-SAC NOTES:

1. 500'-0" MAX. DISTANCE FROM CENTERLINE OF ADJOINING STREET TO RADIUS OF CUL-DE-SAC. LENGTHS EXCEEDING THIS MAY BE CONSIDERED BY CITY UPON SPECIAL REQUEST IN SITUATIONS WHERE LIMITATIONS PREVENT SUCH COMPLIANCE.
2. CUL-DE-SAC SHOULD BE USED ONLY WHERE UNUSUAL CONDITIONS EXIST.
3. AN OPTIONAL ISLAND CENTERED IN THE CUL-DE-SAC CIRCLE SHALL REQUIRE A 25 FOOT MINIMUM DRIVE WIDTH BETWEEN TOP BACK OF CURBS.
4. A CUL-DE-SAC TURNABOUT IS REQUIRED WHEN PUBLIC AND PRIVATE DEAD-END STREETS EXCEED ONE LOT UP TO A MAX OF 150 FEET.
5. STREET SLOPES GREATER THAN 10% MUST RECEIVE WRITTEN APPROVAL FROM FIRE DISTRICT.

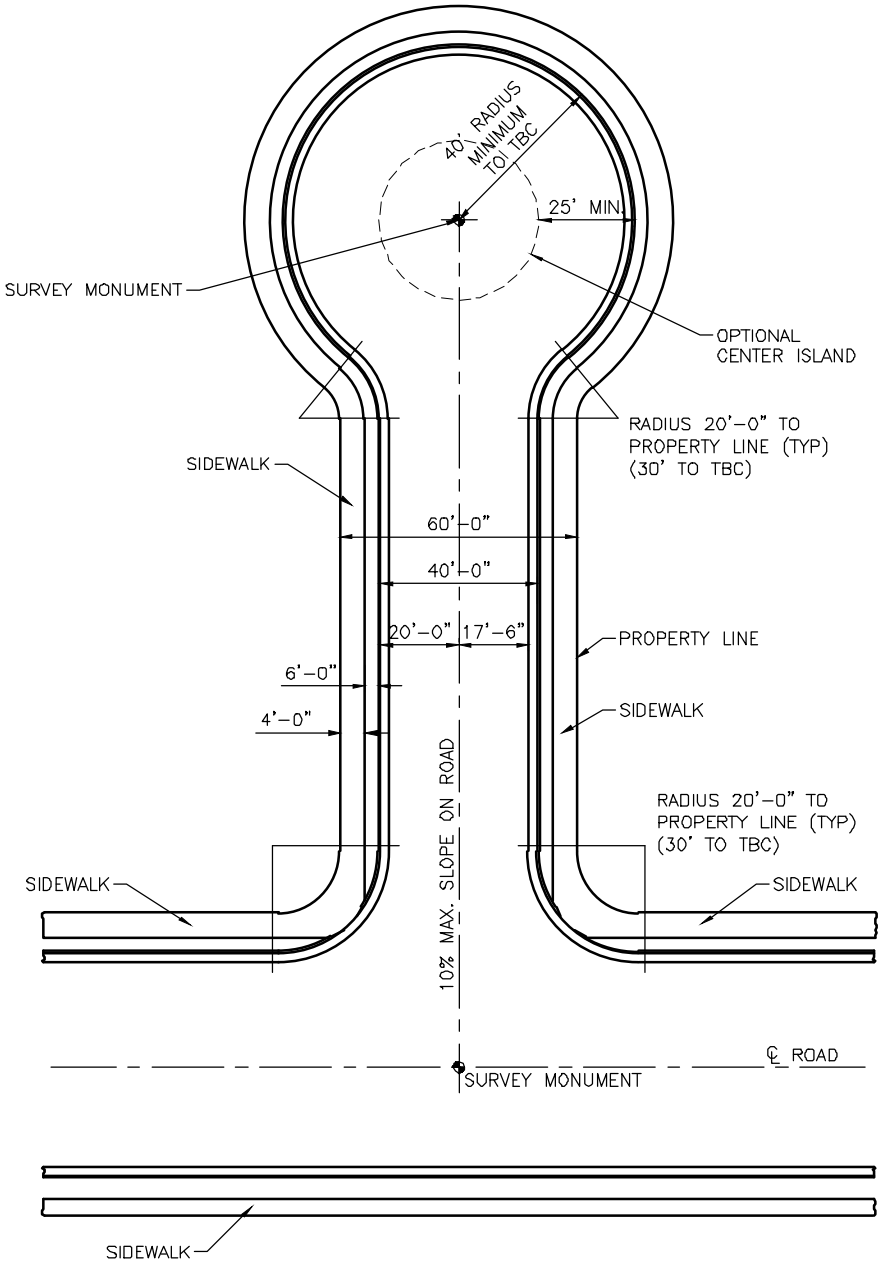

TEMPORARY TURN-AROUND NOTES:

IN AREAS WHERE ROADS LONGER THAN ONE LOT ARE MASTER-PLANNED TO EXTEND AT A FUTURE TIME, A TEMPORARY TURN-AROUND SHALL BE USED WITH THE FOLLOWING REQUIREMENTS:

1. TEMPORARY TURN-AROUNDS SHALL BE HARD-SURFACED AND MATCH THE PAVEMENT DESIGN OF THE CONNECTING ROAD.
2. TEMPORARY TURN-AROUNDS SHALL MATCH THE GEOMETRIC LAYOUT OF A TYPICAL CUL-DE-SAC WITH THE EXCEPTION FOR MAXIMUM LENGTH.
3. CURB, GUTTER, AND SIDEWALK IMPROVEMENTS SURROUNDING THE TEMPORARY TURN-AROUND MAY NOT BE REQUIRED IF PROOF IS PROVIDED TO THE CITY THAT PERMANENT IMPROVEMENTS WILL BE INSTALLED WITHIN TWO YEARS FROM THE CITY'S ACCEPTANCE OF THE TEMPORARY TURN-AROUND.
4. A PROJECT OR DEVELOPMENT INVOLVING THE CONNECTION OF A NEW STREET TO A TEMPORARY TURN-AROUND SHALL BEAR THE RESPONSIBILITY AND COSTS TO REMOVE THE TEMPORARY TURN-AROUND AND RE-ESTABLISH THE IMPROVEMENTS NECESSARY TO MAKE A PROPER CONNECTION.

TYPICAL CUL-DE-SAC DETAIL

SCALE: NOT TO SCALE

STATEMENT OF USE

THIS DOCUMENT AND ANY ILLUSTRATIONS HEREON ARE PROVIDED AS STANDARD CONSTRUCTION DETAILS WITHIN SYRACUSE CITY. DEVIATION FROM THIS DOCUMENT REQUIRES APPROVAL OF SYRACUSE CITY. SYRACUSE CITY CORPORATION CAN NOT BE HELD LIABLE FOR MISUSE OR CHANGES REGARDING THIS DOCUMENT.

NO.	REVISION DESCRIPTION	BY	APR.	DATE

CAD FILE: SYRACUSE CITY STANDARDS
DRAWN BY: JDM/ELC
DESIGN BY: NQS
CHECKED BY: RCW
LAST UPDATED: 11/1/2011
DATE ADOPTED: XX/XX/XX

SYRACUSE EST. CITY 1935

DEVELOPMENT STANDARDS
SYRACUSE CITY CORPORATION

TYPICAL CUL-DE-SAC

SHEET 6

Plot Date 1/5/2011 10:49 PM Plotted By: Kurt S Fredericks
File Path: F:\STANDARDS\CITY STANDARDS\UPDATED STANDARDS\SYRACUSE SYRACUSE CITY STANDARDS.DWG

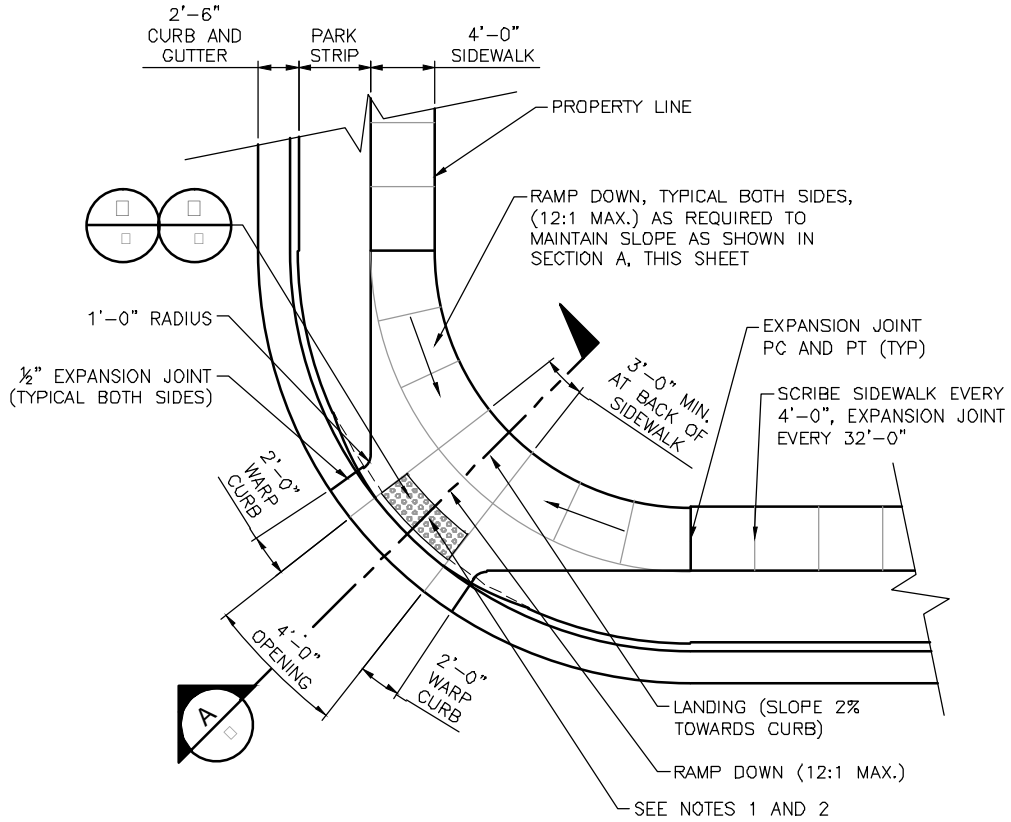

NOTES:

1. LOCATE RAISED TRUNCATED DOMES SO THAT THE EDGE NEAREST THE CURB LINE IS WITHIN 6 TO 8 INCHES FROM THE CURB LINE. PROVIDE 2 FOOT OF TRUNCATED DOME PATTERN AT THE LOWER END OF ALL CURB RAMPS EXTENDING THE FULL WIDTH OF THE CURB RAMP.
2. CHANGES IN ELEVATION GREATER THAN ¼" SHALL BE BEVELED WITH A SLOPE NO GREATER THAN 2:1.
3. THE DETECTABLE WARNING SURFACE DOMES SHALL BE ORIENTED SUCH THAT THE ROWS ARE PARALLEL WITH THE DIRECTION OF PEDESTRIAN TRAVEL TO THE RAMP ON THE OPPOSITE SIDE OF THE STREET.
4. THE STANDARD COLOR FOR THE DETECTABLE WARNING SHALL BE YELLOW. WHEN THE EXISTING SIDEWALK COLOR IS NOT STANDARD CONCRETE, THE COLOR OF THE DETECTABLE WARNING SURFACE SHALL BE DETERMINED BY SYRACUSE CITY.
5. WHEN A DETECTABLE WARNING SURFACE DOME IS CUT, THE REMAINING PORTION OF THE DOME SHALL BE BEVELED TO A MAXIMUM SLOPE OF 1:2.
6. INSTALLATION SHALL BE DONE IN ACCORDANCE WITH MANUFACTURER'S RECOMMENDATION.

A.D.A. WHEELCHAIR RAMP DETAIL

SCALE:NOT TO SCALE

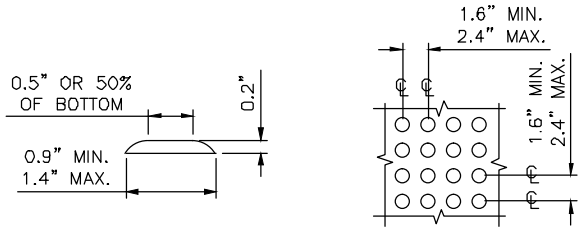

RAISED TRUNCATED DOMES DETAIL

SCALE:NOT TO SCALE

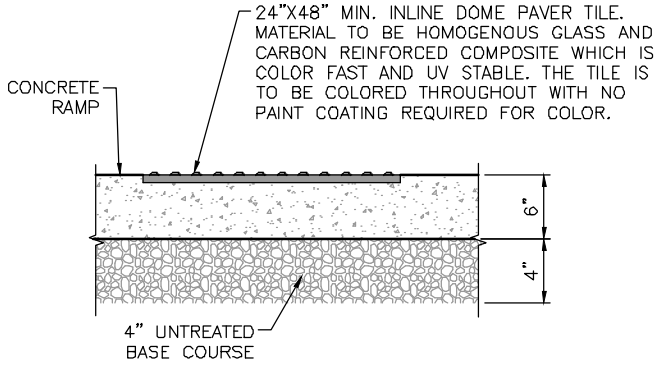

INLINE DOME PAVER TILE DETAIL

SCALE:NOT TO SCALE

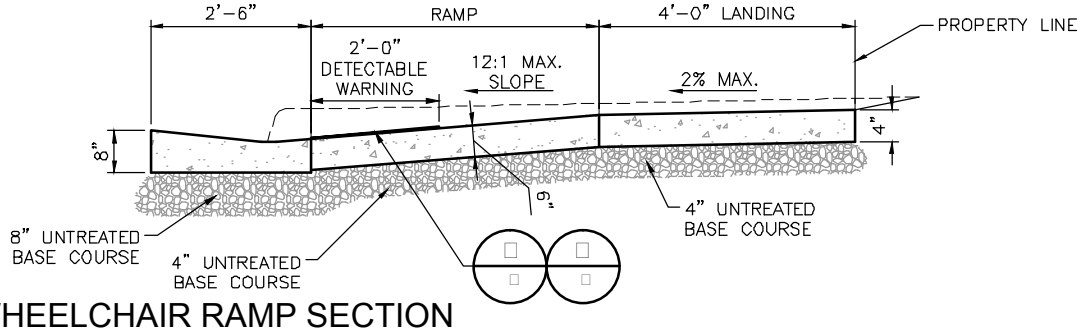

A.D.A. WHEELCHAIR RAMP SECTION

SCALE:NOT TO SCALE

STATEMENT OF USE

THIS DOCUMENT AND ANY ILLUSTRATIONS HEREON ARE PROVIDED AS STANDARD CONSTRUCTION DETAILS WITHIN SYRACUSE CITY. DEVIATION FROM THIS DOCUMENT REQUIRES APPROVAL OF SYRACUSE CITY. SYRACUSE CITY CORPORATION CAN NOT BE HELD LIABLE FOR MISUSE OR CHANGES REGARDING THIS DOCUMENT.

NO.	REVISION DESCRIPTION	BY	APR.	DATE

CAD FILE: SYRACUSE CITY STANDARDS
DRAWN BY: JDM/ELC
DESIGN BY: NQS
CHECKED BY: RCW
LAST UPDATED: 11/1/2011
DATE ADOPTED: XX/XX/XX

SYRACUSE EST. CITY 1935

DEVELOPMENT STANDARDS
SYRACUSE CITY CORPORATION

A.D.A. WHEELCHAIR RAMP DETAILS

SHEET 7

Plot Date 1/5/2011 10:45 AM Plotted By: Kurt S Fredericks
File Path: C:\STANDARDS\CITY STANDARDS\DEVELOPER STANDARDS\SYRACUSE SYRACUSE CITY STANDARDS.DWG

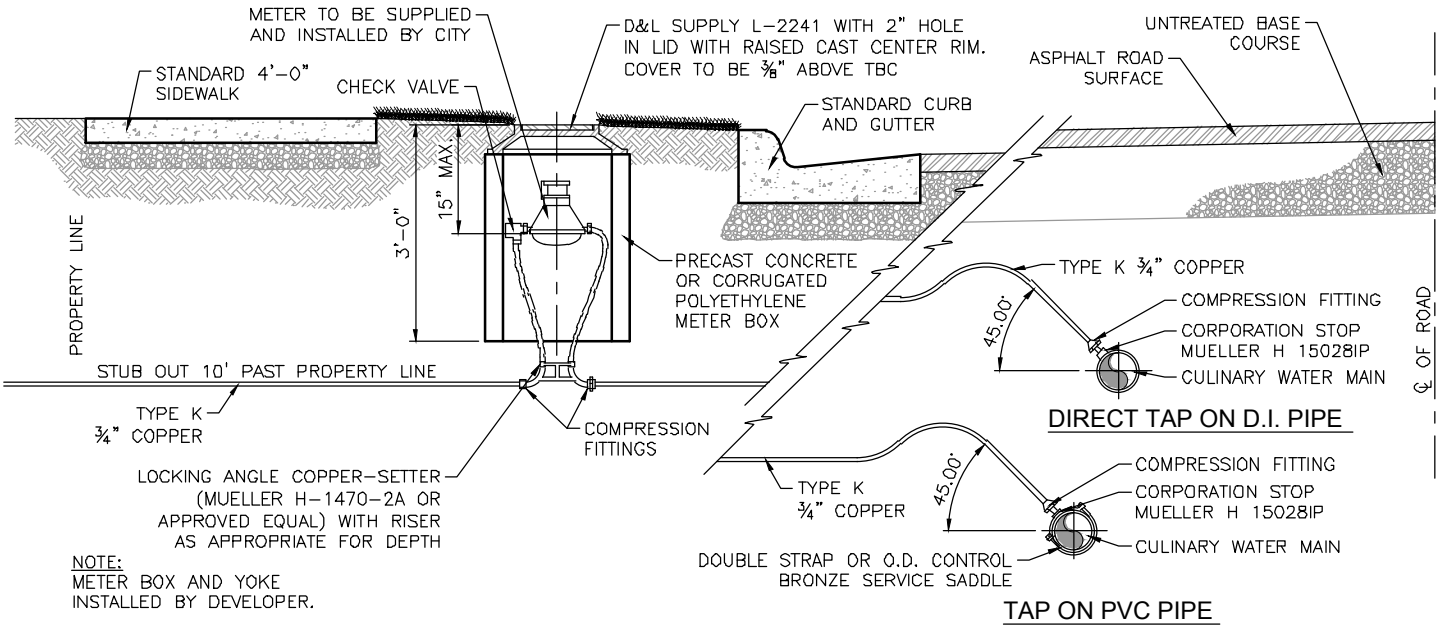

SYRACUSE CITY CORPORATION WATER SERVICE INFORMATION					
SERVICE SIZE	METER BOX SIZE	TYPE OF MATERIAL FOR METER BOX	METER BOX SIZE	CONNECTION TYPE	BYPASS
¾"	18" DIA.	CONCRETE, CORRUGATED POLYETHYLENE	BY CITY	NPT	NO
1"	24" DIA.	CONCRETE, CORRUGATED POLYETHYLENE	BY CITY	NPT	NO
1½"	48" BOX	CONCRETE	BY CITY	FLANGE	YES
2"	48" BOX	CONCRETE	BY CITY	FLANGE	YES
3"	60" BOX	CONCRETE	BY CITY	FLANGE	YES
4"	4'X6' BOX	CONCRETE	BY CITY	FLANGE	YES

TYPICAL WATER CONNECTION

SCALE:NOT TO SCALE

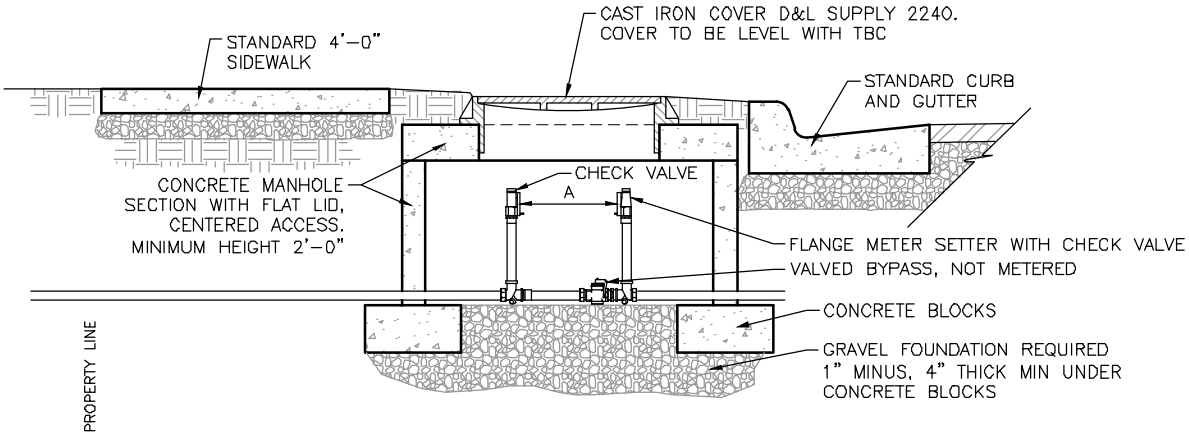

NOTE:
METER TO BE SUPPLIED AND INSTALLED BY CITY.

WATER METER SETTER			
METER SIZE (IN.)	FORD MODEL	MUELLER MODEL	DIMENSION A (IN.)
1 1/2	VBB76-24B-11-66x13.25	B-2423	13.25
2	VBB77-24B-11-77x17.25	B-2423	17.25

TYPICAL FLANGED METER SETTER WATER CONNECTION

SCALE:NOT TO SCALE

STATEMENT OF USE

THIS DOCUMENT AND ANY ILLUSTRATIONS HEREON ARE PROVIDED AS STANDARD CONSTRUCTION DETAILS WITHIN SYRACUSE CITY. DEVIATION FROM THIS DOCUMENT REQUIRES APPROVAL OF SYRACUSE CITY. SYRACUSE CITY CORPORATION CAN NOT BE HELD LIABLE FOR MISUSE OR CHANGES REGARDING THIS DOCUMENT.

NO.	REVISION DESCRIPTION	BY	APR.	DATE

CAD FILE: SYRACUSE CITY STANDARDS
DRAWN BY: JDM/ELC
DESIGN BY: NQS
CHECKED BY: RCW
LAST UPDATED: 11/1/2011
DATE ADOPTED: XX/XX/XX

SYRACUSE EST. CITY 1935

DEVELOPMENT STANDARDS
SYRACUSE CITY CORPORATION

TYPICAL WATER SERVICE CONNECTION DETAIL

SHEET 8

Plot Date 1/5/2011 10:45 PM Plotted By: Kurt Fredericks
File Path: F:\STANDARDS\CITY STANDARDS\PRIVATE STANDARDS\SYRACUSE SYRACUSE CITY STANDARDS.DWG

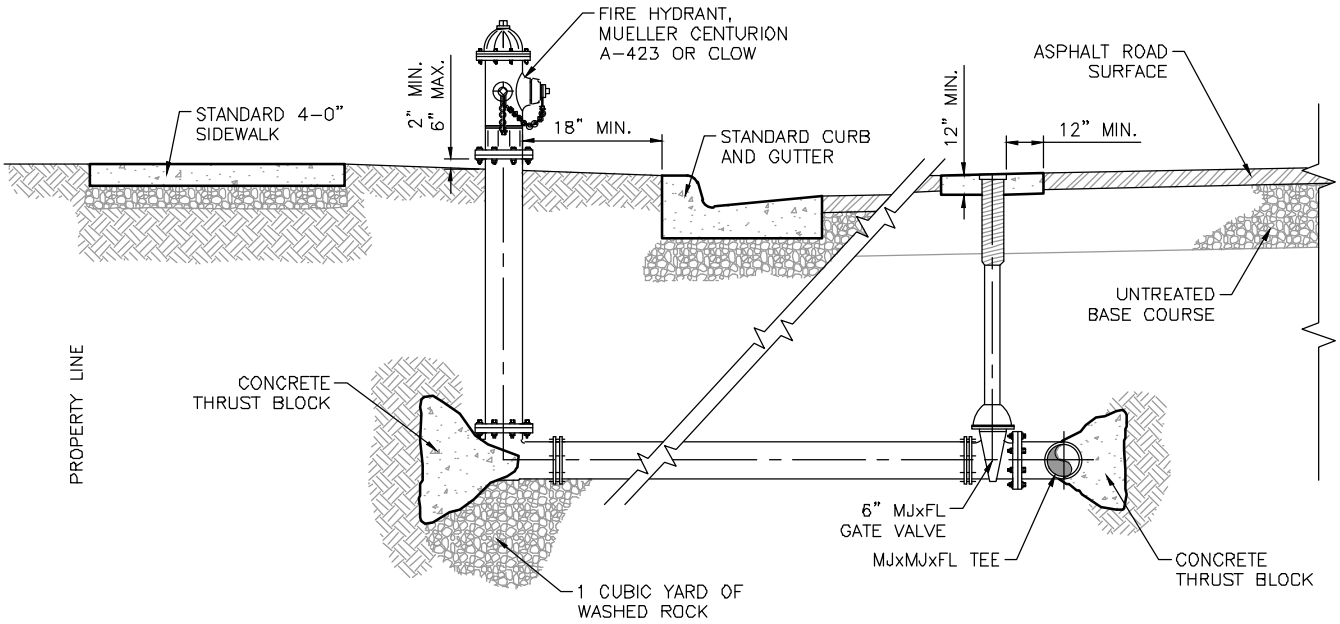

NOTES:
1. THRUST BLOCK SHALL NOT PLUG WEEP HOLES.
2. HYDRANT SHALL STAND PLUMB WITH PUMPER NOZZLE FACING THE STREET.
3. TYPICAL SPACING BETWEEN FIRE HYDRANTS IS 400 FEET.
4. HYDRANTS SHALL NOT BE LOCATED AT THE END OF A CUL-DE-SAC FACING THE TRAVEL PATH ENTERING THE CUL-DE-SAC.

TYPICAL FIRE HYDRANT CONNECTION DETAIL

SCALE:NOT TO SCALE

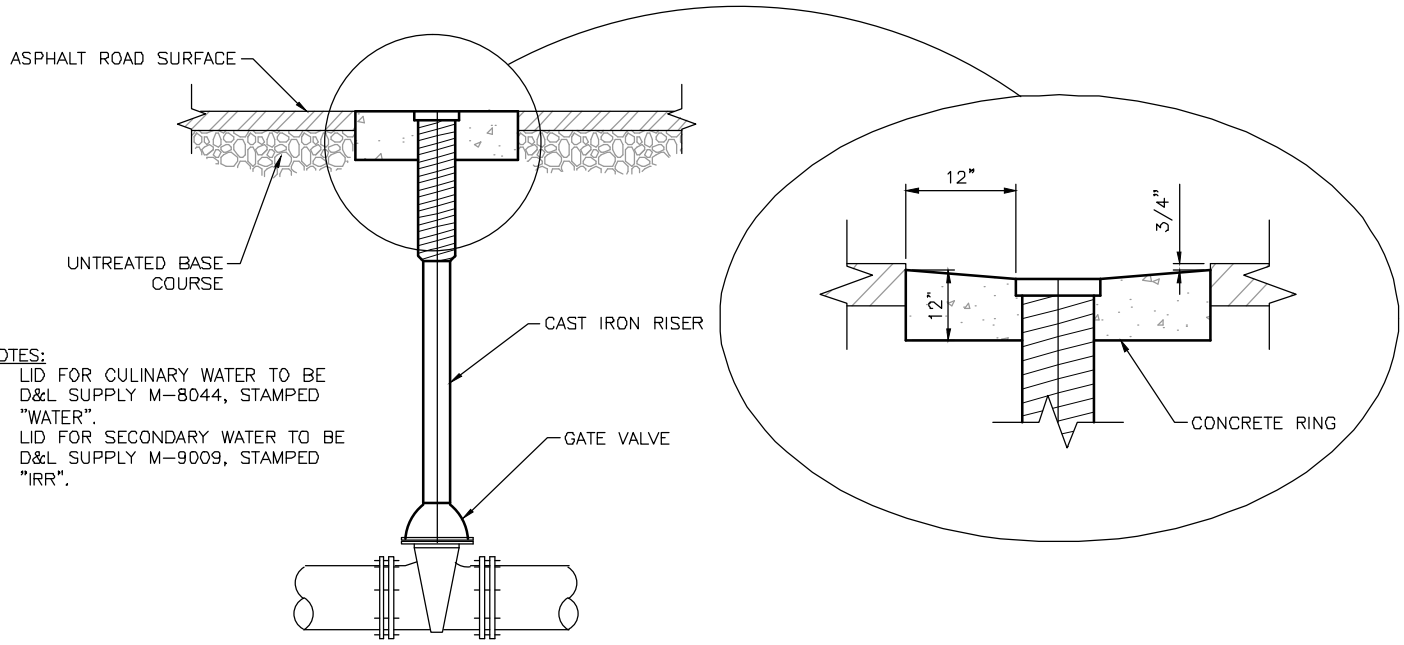

NOTES:
1. LID FOR CULINARY WATER TO BE D&L SUPPLY M-8044, STAMPED "WATER".
2. LID FOR SECONDARY WATER TO BE D&L SUPPLY M-9009, STAMPED "IRR".

TYPICAL WATER VALVE DETAIL

SCALE:NOT TO SCALE

STATEMENT OF USE
THIS DOCUMENT AND ANY ILLUSTRATIONS HEREON ARE PROVIDED AS STANDARD CONSTRUCTION DETAILS WITHIN SYRACUSE CITY. DEVIATION FROM THIS DOCUMENT REQUIRES APPROVAL OF SYRACUSE CITY. SYRACUSE CITY CORPORATION CAN NOT BE HELD LIABLE FOR MISUSE OR CHANGES REGARDING THIS DOCUMENT.

NO.	REVISION DESCRIPTION	BY	APR.	DATE

CAD FILE: SYRACUSE CITY STANDARDS
DRAWN BY: JDM/ELC
DESIGN BY: NQS
CHECKED BY: RCW
LAST UPDATED: 11/1/2011
DATE ADOPTED: XX/XX/XX

SYRACUSE EST. CITY 1935

DEVELOPMENT STANDARDS
SYRACUSE CITY CORPORATION

TYPICAL FIRE HYDRANT CONNECTION DETAIL

SHEET 9

Plot Date 11/8/2011 9:44:41 AM Plotted By: Kurt S Fredericks
File Path: C:\STANDARDS\CITY STANDARDS\UPDATED STANDARDS\SYRACUSE SYRACUSE CITY STANDARDS.DWG

GENERAL NOTES:

1. ALL STRUCTURAL CONCRETE SHALL DEVELOP A MINIMUM COMPRESSIVE STRENGTH OF 4,000 PSI IN 28 DAYS.
2. REINFORCEMENT STEEL SHALL BE DEFORMED BARS CONFORMING IN QUALITY TO THE REQUIREMENTS OF ASTM DESIGNATION A-615, GRADE 60, INCLUDING SUPPLEMENTARY REQUIREMENTS (S1).
3. ALL DETAILING, FABRICATION AND PLACING OF REINFORCING BARS SHALL BE IN ACCORDANCE WITH THE "MANUAL OF STANDARD PRACTICE FOR DETAILING REINFORCED CONCRETE STRUCTURES" ACI-315, LATEST EDITION.
4. TOLERANCES IN PLACING REINFORCEMENT SHALL BE:
   ±⅜ INCH FOR MEMBERS WITH D < 8 INCHES
   ±½ INCH FOR MEMBERS WITH D >= 8 INCHES
5. DOWELS, PIPES, WATERSTOPS AND OTHER INSTALLED MATERIALS AND ACCESSORIES SHALL BE HELD SECURELY IN POSITION WHILE CONCRETE IS BEING PLACED.
6. UNLESS OTHERWISE SHOWN, ASIDE FROM NORMAL ACCESSORIES USED TO HOLD REINFORCING BARS FIRMLY IN POSITION, THE FOLLOWING SHALL BE ADDED:
   A. IN SLABS #5 RISER BARS AT 36 INCHES O.C. MAXIMUM TO SUPPORT TOP REINFORCING BARS.
   B. IN WALLS WITH 2 CURTAINS #3 U OR Z SHAPE SPACES AT 6 FEET O.C. EACH WAY.
7. METAL CLIPS OR SUPPORTS SHALL NOT BE PLACED IN CONTACT WITH THE FORMS OR THE SUBGRADE. CONCRETE BLOCKS (OR DOBBIES) SUPPORTING BARS ON SUBGRADE SHALL BE IN SUFFICIENT NUMBERS TO SUPPORT THE BARS WITHOUT SETTLEMENT, BUT IN NO CASE SHALL SUCH SUPPORT BE CONTINUOUS.
8. DOWELS SHALL BE WIRED OR OTHERWISE HELD IN POSITION. THEY SHALL NOT BE SHOVED INTO FRESHLY PLACED CONCRETE.
9. REINFORCED BARS AND ACCESSORIES SHALL NOT BE IN CONTACT WITH ANY PIPE, PIPE FLANGE OR METAL PARTS EMBEDDED IN CONCRETE, A MINIMUM OF 2 INCHES CLEARANCE SHALL BE PROVIDED AT ALL TIMES.
10. STRUCTURES SHALL BE BACKFILLED WITH GRANULAR SOIL.
11. ALL CONSTRUCTION JOINTS SHALL BE ROUGHED AND CLEANED AND FREE OF LAITANCE.
12. STRUCTURES HAVE BEEN DESIGNED FOR THE FOLLOWING; IF CONDITIONS ARE EXCEEDED THE ENGINEER SHALL BE NOTIFIED.
    A. AASHTO HS-20 TRUCK LOAD
    B. 1'-6" MAX. SOIL ABOVE THE ROOF OF THE STRUCTURE
    C. GROUND WATER TO TOP OF STRUCTURE
    D. "AT-REST" LATERAL SOIL PRESSURE OF 60 PCF FOR DRY SOIL CONDITIONS AND 92.4 PCF WHEN GROUND WATER IS PRESENT

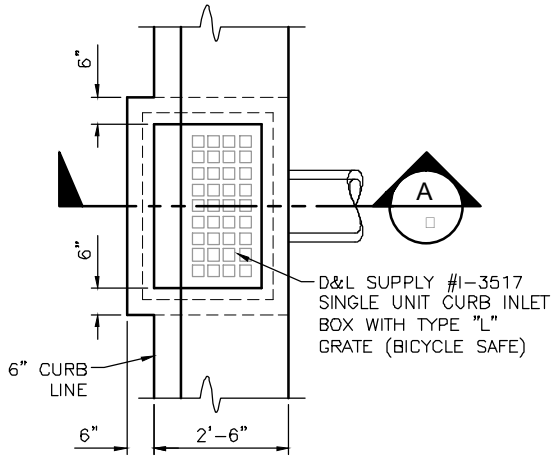

PLAN

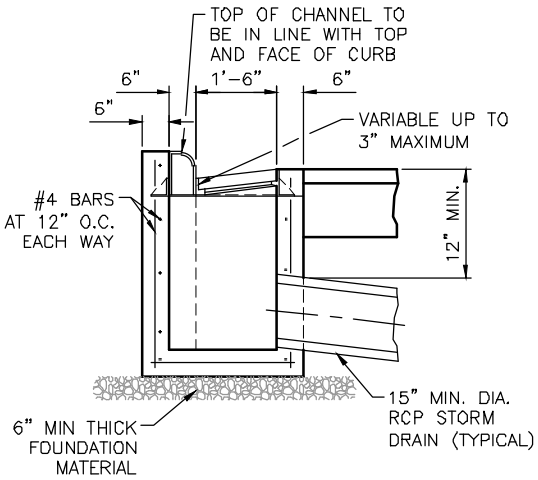

SECTION A

STANDARD CATCH BASIN

SCALE: NOT TO SCALE

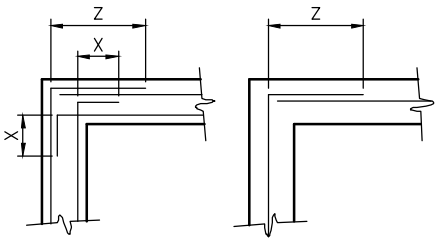

BAR SIZE		
#4	8"	1'-8"
#5	10"	2'-2"

HORIZONTAL REINFORCEMENT AT WALL INTERSECTIONS

SCALE: NOT TO SCALE

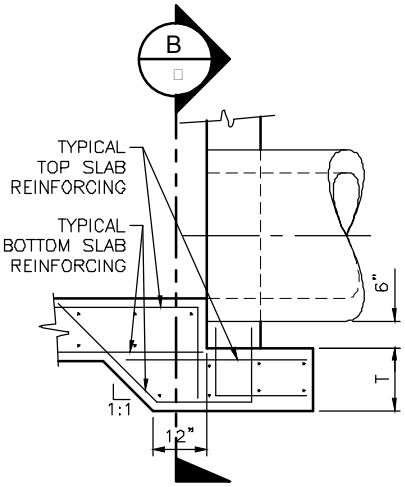

SECTION THRU PIPE

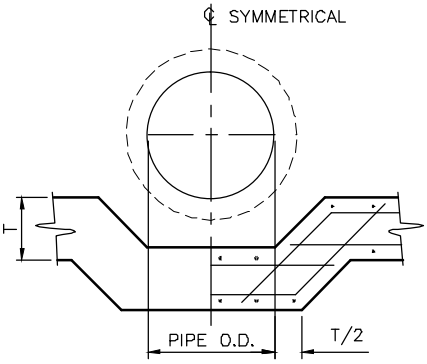

SECTION B

OPTIONAL FOOTING DETAIL AT WALL PIPE CONNECTION

SCALE: NOT TO SCALE

STATEMENT OF USE

THIS DOCUMENT AND ANY ILLUSTRATIONS HEREON ARE PROVIDED AS STANDARD CONSTRUCTION DETAILS WITHIN SYRACUSE CITY. DEVIATION FROM THIS DOCUMENT REQUIRES APPROVAL OF SYRACUSE CITY. SYRACUSE CITY CORPORATION CAN NOT BE HELD LIABLE FOR MISUSE OR CHANGES REGARDING THIS DOCUMENT.

NO.	REVISION DESCRIPTION	BY	APR.	DATE

CAD FILE: SYRACUSE CITY STANDARDS
DRAWN BY: JDM/ELC
DESIGN BY: NQS
CHECKED BY: RCW
LAST UPDATED: 11/1/2011
DATE ADOPTED: XX/XX/XX

SYRACUSE EST. CITY 1935

DEVELOPMENT STANDARDS
SYRACUSE CITY CORPORATION

STANDARD CATCH BASIN

SHEET 10

Plot Date: 1/5/2011 9:44:41 AM Plotted By: Kurt S. Fredericks
File Path: C:\STANDARDS\CITY STANDARDS\DEVELOPER\TEC STANDARDS\SYRACUSE SYR\CUSE CITY STANDARDS.DWG

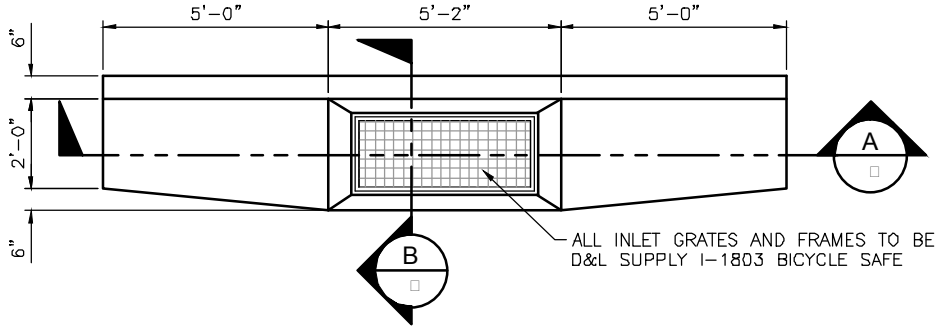

NOTE:
USE ONLY WHERE DIRECTED BY CITY ENGINEER

SINGLE CATCH BASIN PLAN

SCALE: NOT TO SCALE

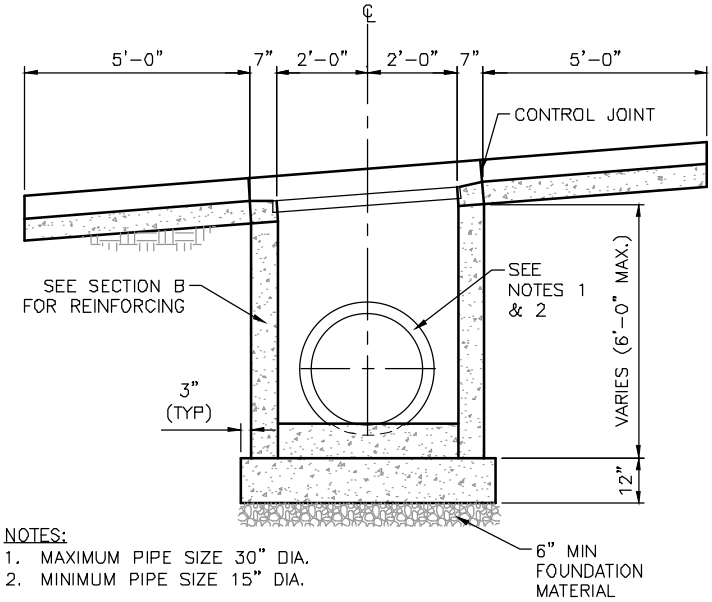

NOTES:
1. MAXIMUM PIPE SIZE 30" DIA.
2. MINIMUM PIPE SIZE 15" DIA.

A SECTION

SCALE: NOT TO SCALE

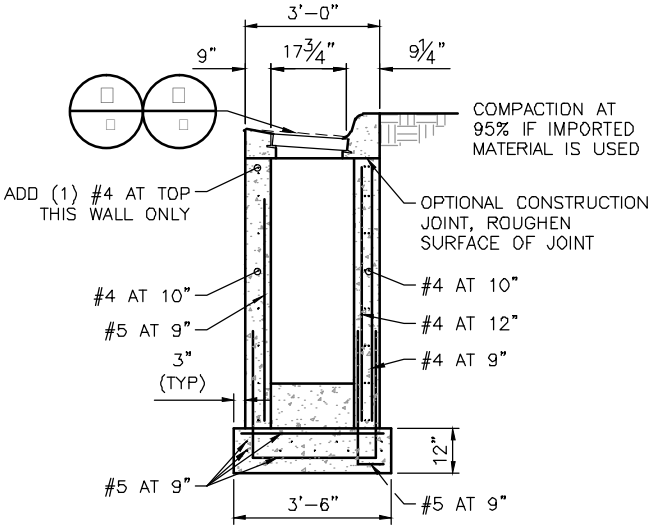

B SECTION

SCALE: NOT TO SCALE

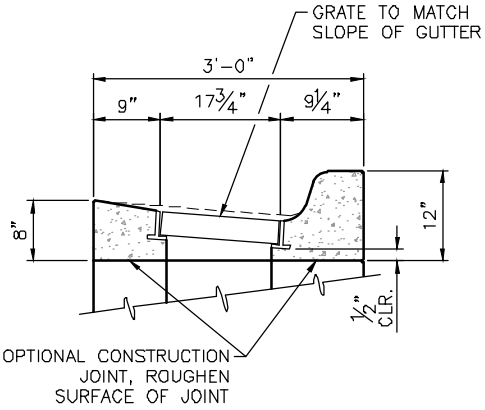

ALTERNATE CURB AND GUTTER INLET DETAIL

SCALE: NOT TO SCALE

STATEMENT OF USE

THIS DOCUMENT AND ANY ILLUSTRATIONS HEREON ARE PROVIDED AS STANDARD CONSTRUCTION DETAILS WITHIN SYRACUSE CITY. DEVIATION FROM THIS DOCUMENT REQUIRES APPROVAL OF SYRACUSE CITY. SYRACUSE CITY CORPORATION CAN NOT BE HELD LIABLE FOR MISUSE OR CHANGES REGARDING THIS DOCUMENT.

NO.	REVISION DESCRIPTION	BY	APR.	DATE

CAD FILE: SYRACUSE CITY STANDARDS
DRAWN BY: JDM/ELC
DESIGN BY: NQS
CHECKED BY: RCW
LAST UPDATED: 11/1/2011
DATE ADOPTED: XX/XX/XX

SYRACUSE EST. CITY 1935

DEVELOPMENT STANDARDS
SYRACUSE CITY CORPORATION

ALTERNATE SINGLE CATCH BASIN

SHEET 11

Plot Date 1/5/2011 10:48 AM Plotted By: Kurt Fredericks
File Path: C:\STANDARDS\CITY STANDARDS\UPDATED STANDARDS\SYRACUSE SYRACUSE CITY STANDARDS.DWG

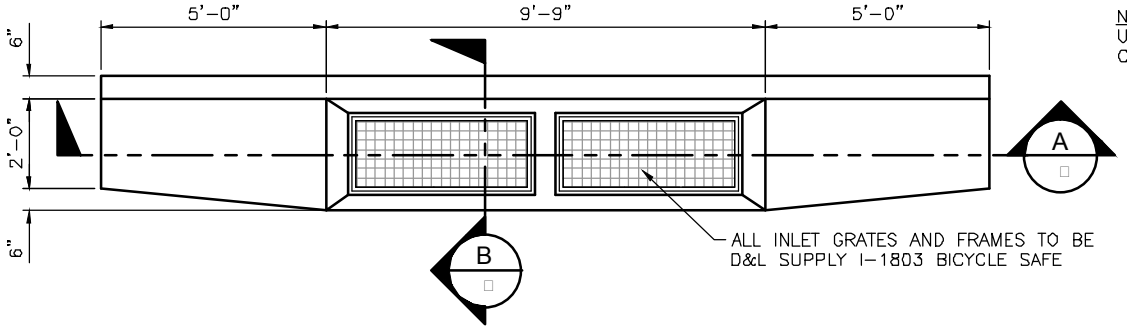

NOTE:
USE ONLY WHERE DIRECTED BY CITY ENGINEER

DOUBLE CATCH BASIN PLAN

SCALE:NOT TO SCALE

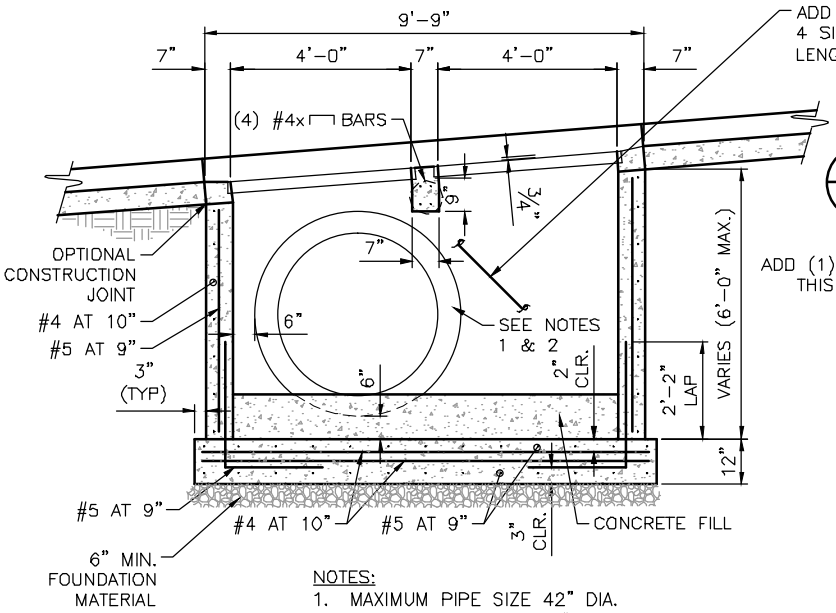

NOTES:
1. MAXIMUM PIPE SIZE 42" DIA.
2. MINIMUM PIPE SIZE 15" DIA.

A SECTION

SCALE:NOT TO SCALE

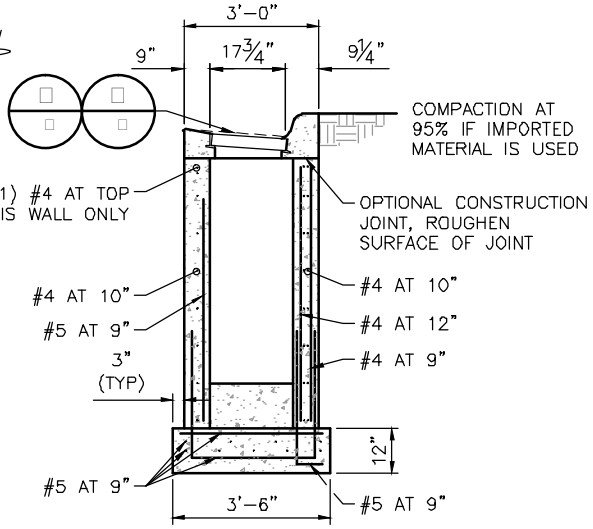

B SECTION

SCALE:NOT TO SCALE

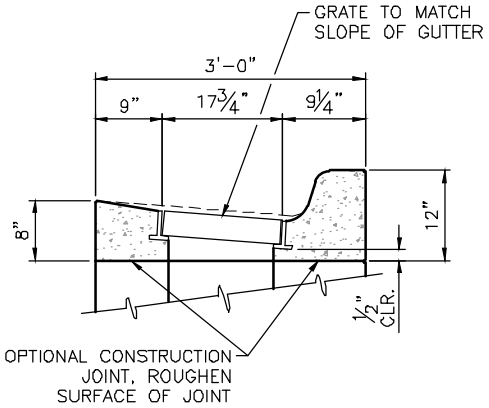

CURB AND GUTTER INLET DETAIL

SCALE:NOT TO SCALE

STATEMENT OF USE

THIS DOCUMENT AND ANY ILLUSTRATIONS HEREON ARE PROVIDED AS STANDARD CONSTRUCTION DETAILS WITHIN SYRACUSE CITY. DEVIATION FROM THIS DOCUMENT REQUIRES APPROVAL OF SYRACUSE CITY. SYRACUSE CITY CORPORATION CAN NOT BE HELD LIABLE FOR MISUSE OR CHANGES REGARDING THIS DOCUMENT.

NO.	REVISION DESCRIPTION	BY	APR.	DATE

CAD FILE: SYRACUSE CITY STANDARDS
DRAWN BY: JDM/ELC
DESIGN BY: NQS
CHECKED BY: RCW
LAST UPDATED: 11/1/2011
DATE ADOPTED: XX/XX/XX

SYRACUSE EST. CITY 1935

DEVELOPMENT STANDARDS
SYRACUSE CITY CORPORATION

ALTERNATE DOUBLE CATCH BASIN

SHEET 12

Plot Date 1/5/2011 10:48 AM Plotted By: Kurt S Fredericks
File Path: F:\STANDARDS\CITY STANDARDS\DEVELOPER STANDARDS\SYRACUSE SYRACUSE CITY STANDARDS.DWG

PIPE SIZE IN.	USE LARGEST PIPE SIZE FOR THESE DIMENSIONS AND REBAR EXCEPT DIMENSION "Y"									
	"X"	"Y"	"T"	"A"	"B"	"C"	"D"	"E"	"F"	"G"
18	3'-0"	3'-3"	6"	#4 @ 12"	---	---	#5 @ 9"	#4 @ 12"	#4 @ 12"	#5 @ 9"
21	3'-3"	3'-6"	6"	#4 @ 12"	---	---	#5 @ 9"	#4 @ 12"	#4 @ 12"	#5 @ 9"
24	3'-6"	3'-9"	6"	#4 @ 12"	---	---	#5 @ 9"	#4 @ 12"	#4 @ 12"	#5 @ 9"
27	3'-9"	4'-0"	6"	#4 @ 12"	---	---	#5 @ 9"	#4 @ 12"	#4 @ 12"	#5 @ 9"
30	4'-2"	4'-5"	6"	#4 @ 12"	---	---	#5 @ 9"	#4 @ 12"	#4 @ 12"	#5 @ 9"
33	4'-5"	4'-8"	6"	#4 @ 12"	---	---	#5 @ 9"	#4 @ 12"	#4 @ 12"	#5 @ 9"
36	4'-8"	4'-11"	6"	#4 @ 12"	---	---	#5 @ 9"	#4 @ 12"	#4 @ 12"	#5 @ 9"
42	5'-3"	5'-6"	6"	#4 @ 12"	---	---	#5 @ 9"	#4 @ 12"	#4 @ 12"	#5 @ 9"
48	5'-10"	6'-1"	10"	#4 @ 12"	#5 @ 12"	#4 @ 12"	---	---	#4 @ 12"	#5 @ 12"
54	6'-5"	6'-8"	10"	#4 @ 12"	#5 @ 12"	#4 @ 12"	---	---	#4 @ 12"	#5 @ 12"
60	7'-0"	7'-3"	10"	#4 @ 12"	#5 @ 12"	#4 @ 12"	---	---	#4 @ 12"	#5 @ 12"
66	7'-7"	8'-10"	10"	#4 @ 12"	#5 @ 12"	#4 @ 12"	---	---	#4 @ 9"	#5 @ 12"
72	8'-2"	9'-5"	10"	#4 @ 12"	#5 @ 12"	#4 @ 12"	---	---	#4 @ 9"	#5 @ 12"

NOTE:

1. THE "H" REBAR IS BASED ON THE SMALLER PIPE. WHEN THE SMALLER PIPE IS 18" TO 36" USE #4 AT 6". WHEN THE SMALLER PIPE IS 42" TO 60" USE #5 AT 6". WHEN THE SMALLER PIPE IS 66" OR 72" USE #6 AT 6".
2. WALL THICKNESS IS BASED ON THE LARGEST OF THE PIPES. FOR 10" WALLS, USE 2 LAYERS OF STEEL. FOR 6" WALLS, USE A SINGLE LAYER OF STEEL.
3. WHEN "Z" IS LESS THAN 4'-0", THE VERTICAL REBAR LAP BE ELIMINATED AND DOWELS EXTENDED TO THE TOP OF THE WALL.

GENERAL NOTES:

1. ALL STRUCTURAL CONCRETE SHALL DEVELOP A MINIMUM COMPRESSIVE STRENGTH OF 4,000 PSI IN 28 DAYS.
2. REINFORCEMENT STEEL SHALL BE DEFORMED BARS CONFORMING IN QUALITY TO THE REQUIREMENTS OF ASTM DESIGNATION A-615, GRADE 60, INCLUDING SUPPLEMENTARY REQUIREMENTS (S1).
3. ALL DETAILING, FABRICATION AND PLACING OF REINFORCING BARS SHALL BE IN ACCORDANCE WITH THE "MANUAL OF STANDARD PRACTICE FOR DETAILING REINFORCED CONCRETE STRUCTURES ACI-315, LATEST EDITION.
4. TOLERANCES IN PLACING REINFORCEMENT SHALL BE:
   ±⅜ INCH FOR MEMBERS WITH D < 8 INCHES
   ±½ INCH FOR MEMBERS WITH D ≥ 8 INCHCES
5. DOWELS, PIPES, WATERSTOPS AND OTHER INSTALLED MATERIALS AND ACCESSORIES SHALL BE HELD SECURELY IN POSITION WHILE CONCRETE IS BEING PLACED.
6. UNLESS OTHERWISE SHOWN, ASIDE FROM NORMAL ACCESSORIES USED TO HOLD REINFORCING BARS FIRMLY IN POSITION, THE FOLLOWING SHALL BE ADDED:
   A. IN SLABS #5 RISER BARS AT 36 INCHES O.C. MAXIMUM TO SUPPORT TOP REINFORCING BARS.
   B. IN WALLS WITH 2 CURTAINS #4 "U" OR "Z" SHAPE SPACES AT 6 FEET O.C. EACH WAY.
7. METAL CLIPS OR SUPPORTS SHALL NOT BE PLACED IN CONTACT WITH THE FORMS OF THE SUBGRADE. CONCRETE BLOCKS (OR DOBBIES) SUPPORTING BARS ON SUBGRADE SHALL BE IN SUFFICIENT NUMBERS TO SUPPORT THE BARS WITHOUT SETTLEMENT, BUT IN NO CASE SHALL SUCH SUPPORT BE CONTINUOUS.
8. DOWELS SHALL BE WIRED OR OTHERWISE HELD IN POSITION. THEY SHALL NOT BE SHOVED INTO FRESHLY PLACED CONCRETE.
9. REINFORCED BARS AND ACCESSORIES SHALL NOT BE IN CONTACT WITH ANY PIPE, PIPE FLANGE, OR METAL PARTS EMBEDDED IN CONCRETE. A MINIMUM OF 2 INCHES CLEARANCE SHALL BE PROVIDED AT ALL TIMES.
10. STRUCTURES SHALL BE BACKFILLED WITH GRANULAR SOIL.
11. ALL CONSTRUCTION JOINTS SHALL BE ROUGHED AND CLEANED AND FREE OF LAITANCE.
12. STRUCTURES HAVE BEEN DESIGNED FOR THE FOLLOWING; IF CONDITIONS ARE EXCEEDED THE ENGINEER SHALL BE NOTIFIED.
   A. AASHTO HS-20 TRUCK LOAD.
   B. 1'-6" MAX. SOIL ABOVE THE ROOF OF THE STRUCTURE.
   C. GROUND WATER TO TOP OF STRUCTURE.
   D. "AT-REST" LATERAL SOIL PRESSURE OF 60 PCF FOR DRY SOIL CONDITIONS AND 92.4 PCF WHEN GROUND WATER IS PRESENT.

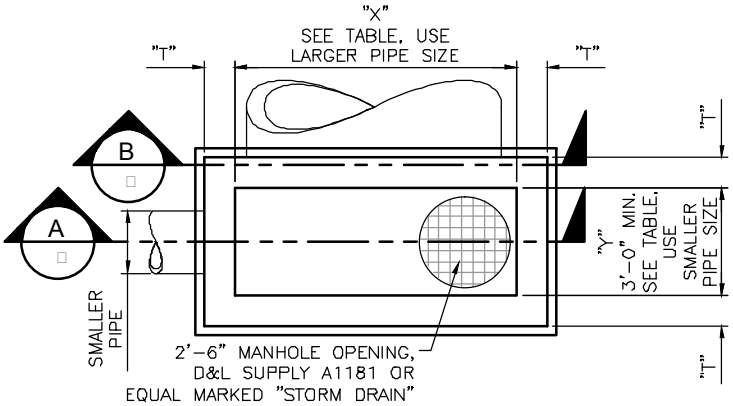

STANDARD CLEANOUT PLAN VIEW

SCALE: NOT TO SCALE

TYPE

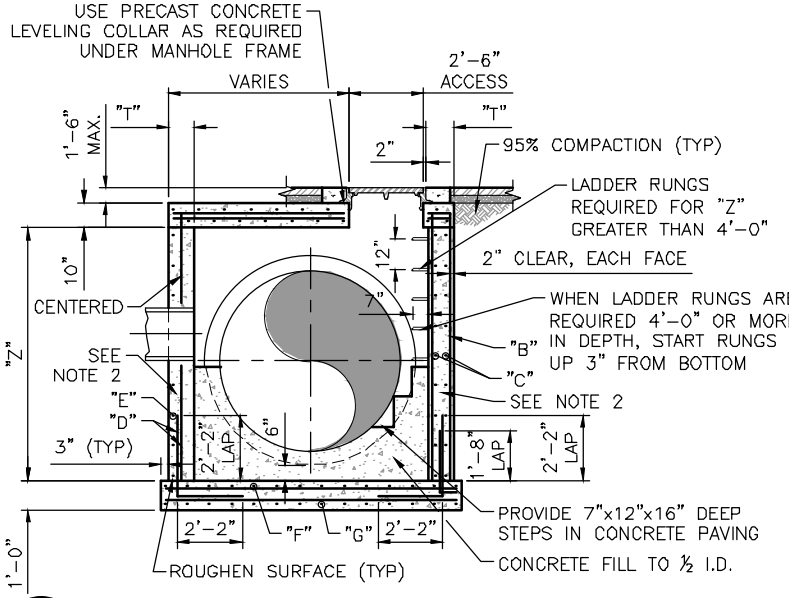

STANDARD CLEANOUT SECTION

SCALE: NOT TO SCALE

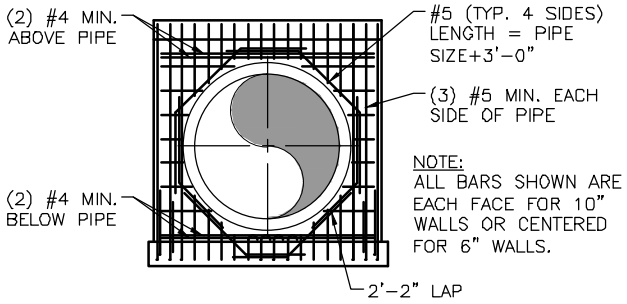

NOTE:
ALL BARS SHOWN ARE EACH FACE FOR 10" WALLS OR CENTERED FOR 6" WALLS.

STANDARD CLEANOUT SECTION

SCALE: NOT TO SCALE

STATEMENT OF USE

THIS DOCUMENT AND ANY ILLUSTRATIONS HEREON ARE PROVIDED AS STANDARD CONSTRUCTION DETAILS WITHIN SYRACUSE CITY. DEVIATION FROM THIS DOCUMENT REQUIRES APPROVAL OF SYRACUSE CITY. SYRACUSE CITY CORPORATION CAN NOT BE HELD LIABLE FOR MISUSE OR CHANGES REGARDING THIS DOCUMENT.

NO.	REVISION DESCRIPTION	BY	APR.	DATE

CAD FILE: SYRACUSE CITY STANDARDS
DRAWN BY: JDM/ELC
DESIGN BY: NQS
CHECKED BY: RCW
LAST UPDATED: 11/1/2011
DATE ADOPTED: XX/XX/XX

SYRACUSE EST. CITY 1935

DEVELOPMENT STANDARDS
SYRACUSE CITY CORPORATION

STANDARD STORM DRAIN CLEANOUT

SHEET 13

Plot Date 1/5/2011 10:48 AM Plotted By: Kurt S. Fredericks
File Path: C:\STANDARDS\CITY STANDARDS\PRIVATE STANDARDS\SYRACUSE SYR\CLUSE CITY STANDARDS.DWG

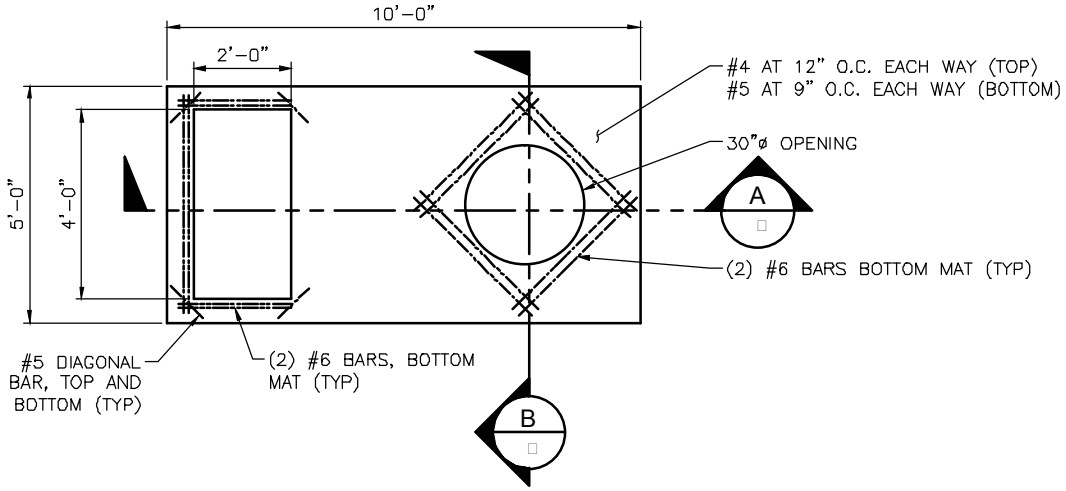

PLAN

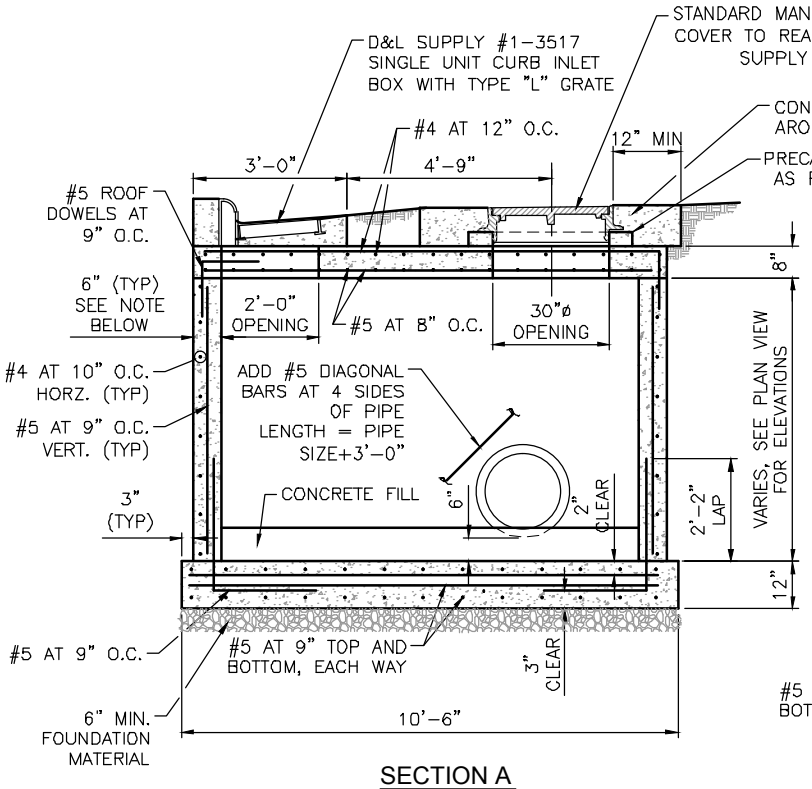

SECTION A

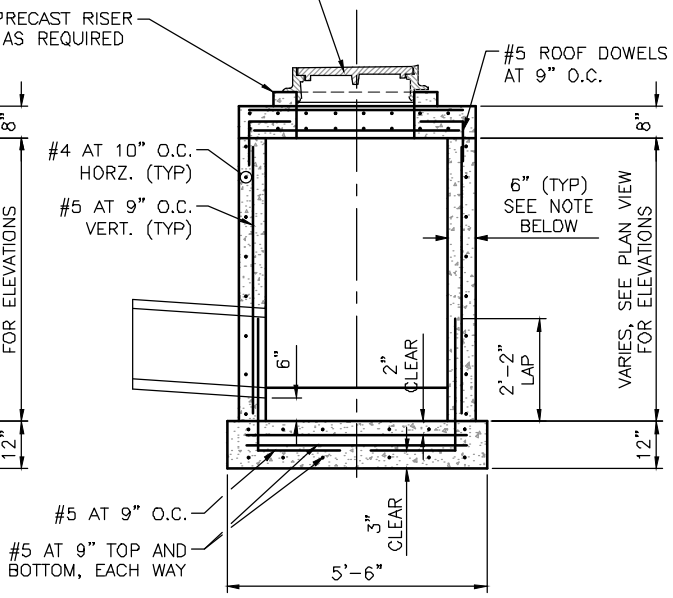

SECTION B

NOTE:
USE 6" THICK WALLS FOR WALL HEIGHT UP TO 5'-0". FOR WALL HEIGHT GREATER THAN 5'-0", USE 8" THICK WALLS.

COMBINATION INLET CLEANOUT DETAIL

SCALE: NOT TO SCALE

STATEMENT OF USE
THIS DOCUMENT AND ANY ILLUSTRATIONS HEREON ARE PROVIDED AS STANDARD CONSTRUCTION DETAILS WITHIN SYRACUSE CITY. DEVIATION FROM THIS DOCUMENT REQUIRES APPROVAL OF SYRACUSE CITY. SYRACUSE CITY CORPORATION CAN NOT BE HELD LIABLE FOR MISUSE OR CHANGES REGARDING THIS DOCUMENT.

NO.	REVISION DESCRIPTION	BY	APR.	DATE

CAD FILE: SYRACUSE CITY STANDARDS
DRAWN BY: JDM/ELC
DESIGN BY: NQS
CHECKED BY: RCW
LAST UPDATED: 11/1/2011
DATE ADOPTED: XX/XX/XX

SYRACUSE EST. CITY 1935

DEVELOPMENT STANDARDS
SYRACUSE CITY CORPORATION

TYPICAL COMBINATION INLET CLEANOUT

SHEET 14

Plot Date 11/8/2011 10:32 AM Plotted By: Kurt S Fredericks
File Path: C:\STANDARDS\CITY STANDARDS\UPDATED STANDARDS\SYRACUSE SYRACUSE CITY STANDARDS.DWG

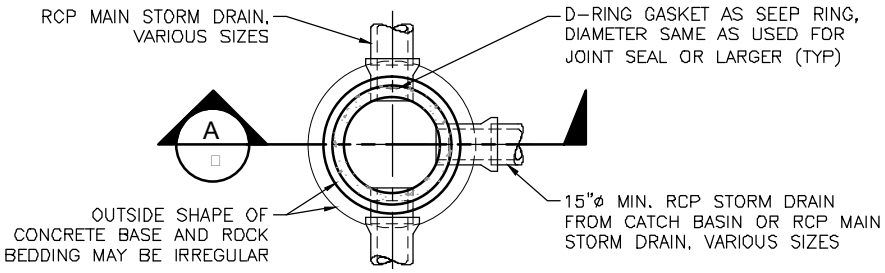

TYPICAL STORM DRAIN MANHOLE PLAN BELOW CONE

SCALE:NOT TO SCALE

NOTES:

1. MANHOLE WALL AND CONE SECTION SHALL CONFORM TO ASTM C-478.
2. LIFT HOLE SHALL BE FILLED WITH GROUT.
3. IF MANHOLES ARE TOO SHALLOW FOR CONE SECTION, USE FLAT CONCRETE LID INSTEAD.
4. STEPS @ 12" O.C. ARE REQUIRED IN MANHOLES GREATER THAN 54" DEEP. STEPS SHALL BE NON-CORRISIVE POLY PROPYLENE COATED STEEL AND CONFORM TO ASTM C-478.
5. MANHOLE CONE SHALL BE ECCENTRIC.
6. IF MANHOLE IS TOO SHALLOW FOR CONE SECTION, USE FLAT CONCRETE LID AS ALTERNATE.

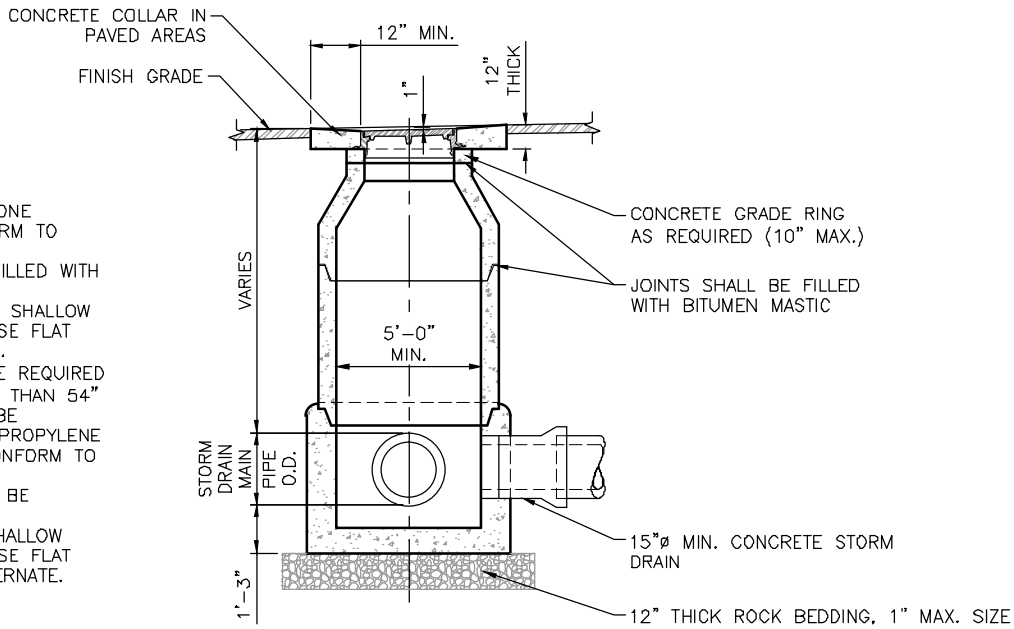

TYPICAL STORM DRAIN MANHOLE SECTION

SCALE:NOT TO SCALE

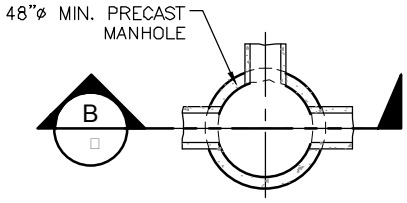

FLAT LID STORM DRAIN MANHOLE PLAN

SCALE:NOT TO SCALE

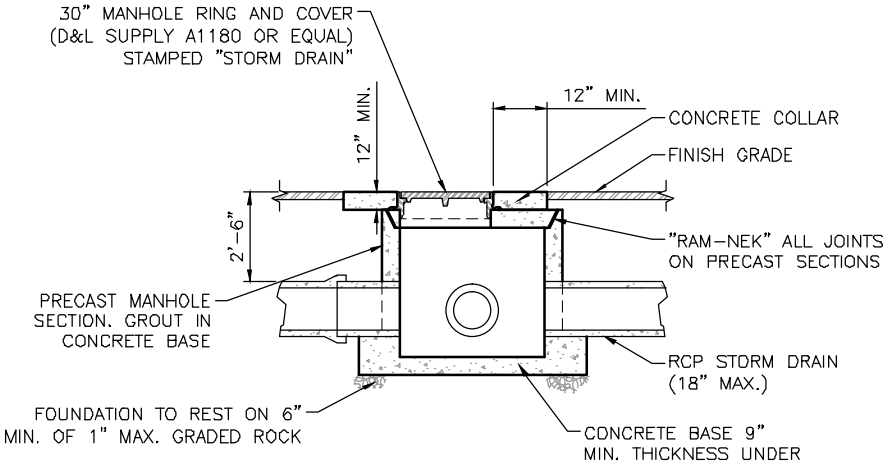

FLAT LID STORM DRAIN MANHOLE SECTION

SCALE:NOT TO SCALE

STATEMENT OF USE

THIS DOCUMENT AND ANY ILLUSTRATIONS HEREON ARE PROVIDED AS STANDARD CONSTRUCTION DETAILS WITHIN SYRACUSE CITY. DEVIATION FROM THIS DOCUMENT REQUIRES APPROVAL OF SYRACUSE CITY. SYRACUSE CITY CORPORATION CAN NOT BE HELD LIABLE FOR MISUSE OR CHANGES REGARDING THIS DOCUMENT.

NO.	REVISION DESCRIPTION	BY	APR.	DATE

CAD FILE: SYRACUSE CITY STANDARDS
DRAWN BY: JDM/ELC
DESIGN BY: NQS
CHECKED BY: RCW
LAST UPDATED: 11/1/2011
DATE ADOPTED: XX/XX/XX

SYRACUSE CITY EST. 1935

DEVELOPMENT STANDARDS
SYRACUSE CITY CORPORATION

STANDARD STORM DRAIN MANHOLES

SHEET 15

Plot Date 11/8/2011 10:02 PM Plotted By: Kurt S Fredericks
File Path: F:\STANDARDS\CITY STANDARDS\PRIVATE STANDARDS\SYRACUSE SYRACUSE CITY STANDARDS.DWG

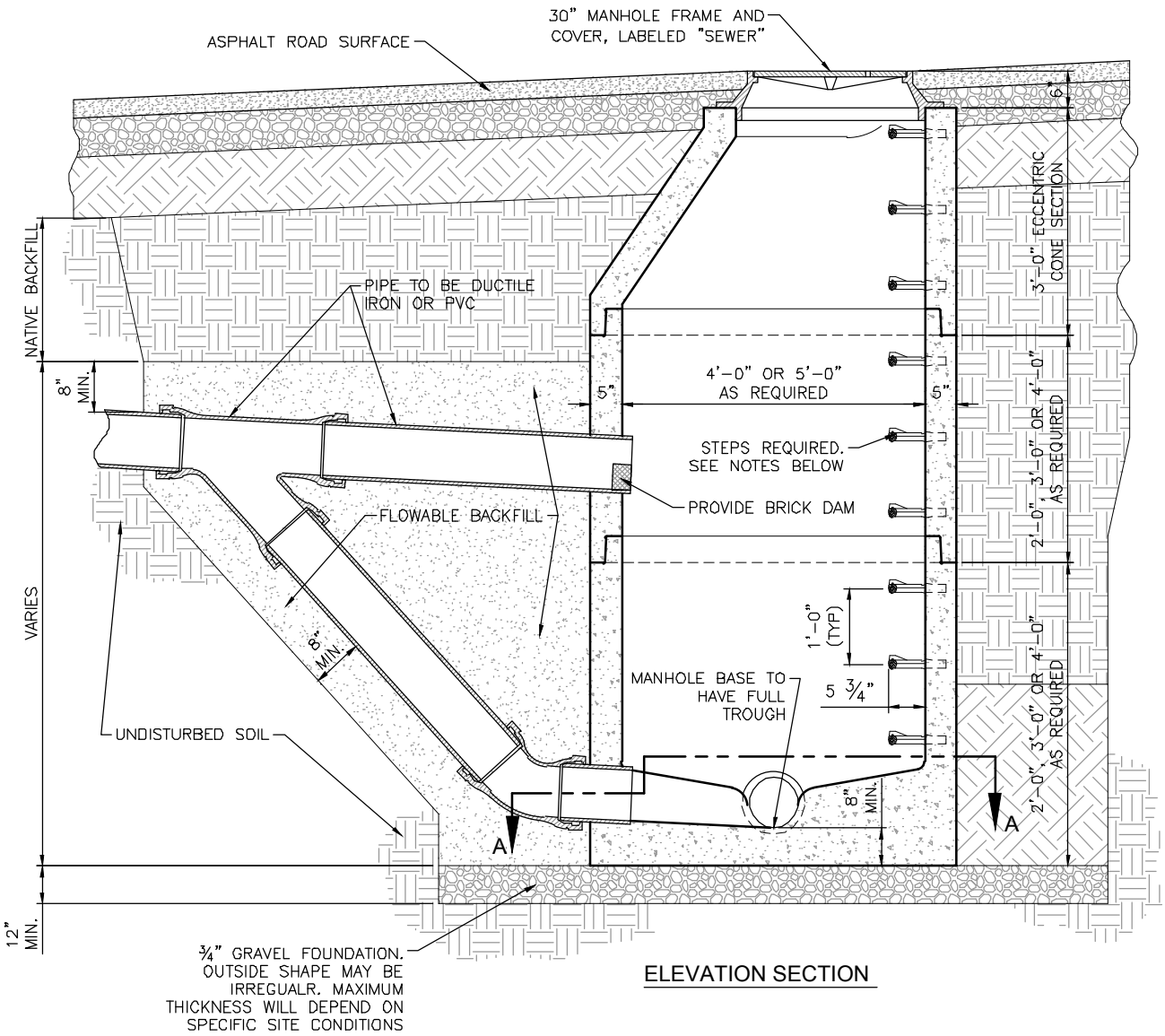

ELEVATION SECTION

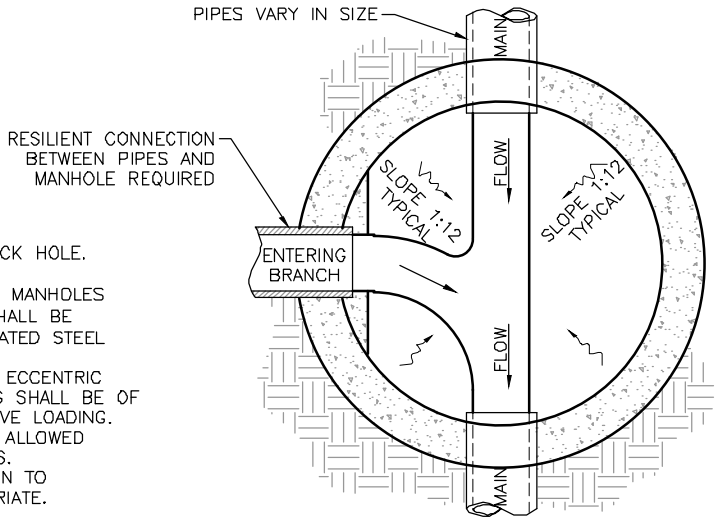

PLAN VIEW

NOTES:

1. MANHOLE COVER TO CONTAIN ONE PICK HOLE. D&L SUPPLY A1180 OR EQUAL.
2. STEPS @ 12" O.C. ARE REQUIRED IN MANHOLES GREATER THEN 54" DEEP. STEPS SHALL BE NON-CORROSIVE POLYPROPYLENE COATED STEEL AND CONFORM TO ASTM C-478.
3. FLAT LIDS MAY BE USED IN LIEU OF ECCENTRIC CONES WHERE NECESSARY. FLAT LIDS SHALL BE OF ECCENTRIC DESIGN AND MEET H20 LIVE LOADING. NO FLAT RING AND COVERS WILL BE ALLOWED UNLESS APPROVED BY PUBLIC WORKS.
4. USE FERNCO COUPLING TO TRANSITION TO CONCRETE OR PVC PIPE AS APPROPRIATE.

TYPICAL DROP MANHOLE DETAIL

SCALE: NOT TO SCALE

STATEMENT OF USE
THIS DOCUMENT AND ANY ILLUSTRATIONS HEREON ARE PROVIDED AS STANDARD CONSTRUCTION DETAILS WITHIN SYRACUSE CITY. DEVIATION FROM THIS DOCUMENT REQUIRES APPROVAL OF SYRACUSE CITY. SYRACUSE CITY CORPORATION CAN NOT BE HELD LIABLE FOR MISUSE OR CHANGES REGARDING THIS DOCUMENT.

NO.	REVISION DESCRIPTION	BY	APR.	DATE

CAD FILE: SYRACUSE CITY STANDARDS
DRAWN BY: JDM/ELC
DESIGN BY: NQS
CHECKED BY: RCW
LAST UPDATED: 11/1/2011
DATE ADOPTED: XX/XX/XX

SYRACUSE EST. CITY 1935

DEVELOPMENT STANDARDS
SYRACUSE CITY CORPORATION

TYPICAL DROP MANHOLE

SHEET 16

Plot Date 11/8/2011 1:09 PM Plotted By: Kurt Fredericks
File Path: F:\STANDARDS\CITY STANDARDS\DEVELOPER STANDARDS\SYRACUSE SYRACUSE CITY STANDARDS.DWG

LATERAL NOTES:

1. CLEANOUTS ARE REQUIRED AT A MAXIMUM OF 100'-0" SPACING ALONG LATERALS AND AT EACH SERIES OF BENDS AMOUNTING TO 90°.
2. CLEANOUTS MUST BE LOCATED AT PROPERTY LINE AND WITHIN 5' OUTSIDE OF A FOUNDATION WALL.
3. TAPS ON EXISTING MAIN SHALL BE CORED AND ROMAC SEWER SADDLE WITH STAINLESS STEEL BANDS OR APPROVED EQUAL.
4. SANITARY SEWER LATERALS TO BE GREEN PVC, TO DIFFERENTIATE FROM WHITE LAND DRAIN LATERALS.
5. CONTRACTOR TO EXTEND LATERAL 10'-0" BEYOND PROPERTY LINE. MARK END WITH 2x4, PAINTED GREEN FOR SEWER, WHITE FOR LAND DRAIN.
6. LOCATION OF AS-BUILT LATERALS AND CLEANOUTS MUST BE PROVIDED TO THE CITY ENGINEER.
7. RAIN GUTTER DOWN SPOUTS AND SURFACE INLET CONNECTIONS TO LATERAL ARE PROHIBITED.

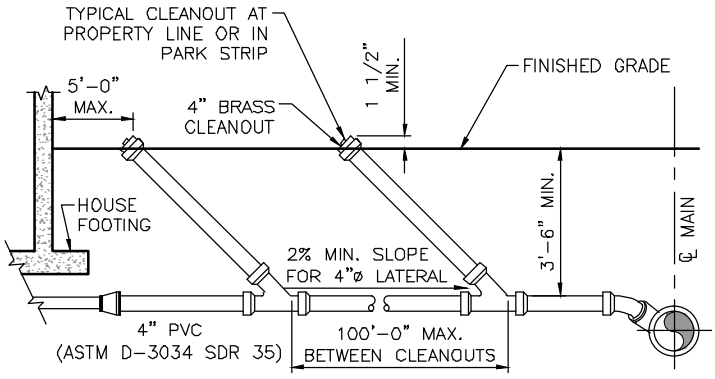

PROFILE OF TYPICAL LATERAL

SCALE:NOT TO SCALE

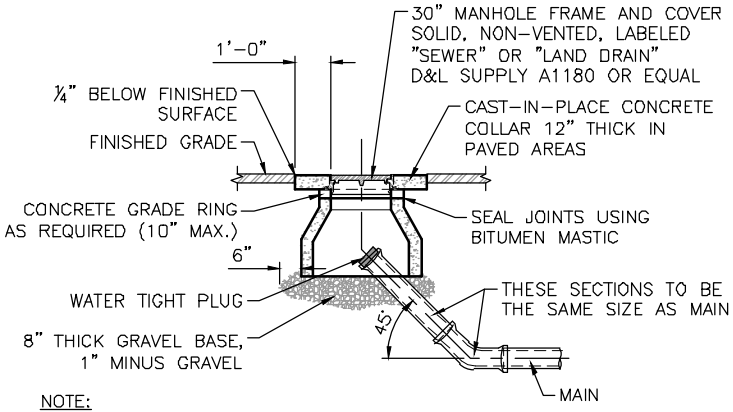

NOTE:
GRAVEL BASE TO BE 12" LARGER THAN OUTSIDE DIAMETER OF MANHOLE CONE.

TEMPORARY MAIN CLEANOUT

SCALE:NOT TO SCALE

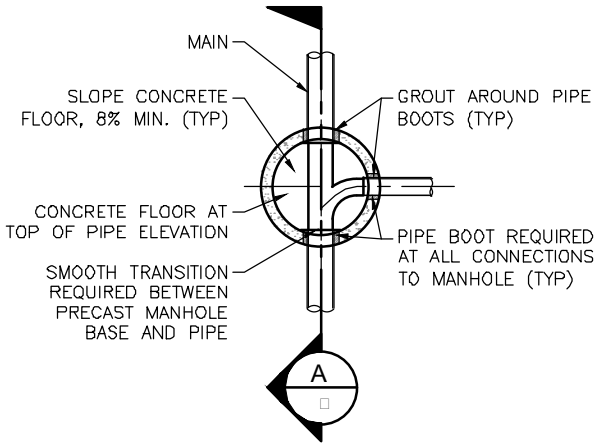

MANHOLE PLAN BELOW CONE

SCALE:NOT TO SCALE

MANHOLE NOTES:

1. INVERT ELEVATION DROP BETWEEN INFLOW AND OUTFLOW SHALL BE 0.20 FT MIN.
2. MANHOLE WALL AND CONE SECTION SHALL CONFORM TO ASTM C-478.
3. MANHOLE SHALL BE 5'-0"ø IF MAIN IS GREATER THAN 12"ø, OR IF MORE THAN THREE MAIN PIPES CONNECT TO MANHOLE, OR IF OTHERWISE SPECIFIED ON DRAWINGS.
4. LIFT HOLES SHALL BE FILLED WITH GROUT.
5. MANHOLE CONE SHALL BE ECCENTRIC.
6. STEPS @ 12" O.C.C ARE REQUIRED IN MANHOLES GREATER THEN 54" DEEP. STEPS SHALL BE NON-CORROSIVE POLYPROPYLENE COATED STEEL AND CONFORM TO ASTM C-478.
7. IF MANHOLES ARE TOO SHALLOW FOR CONE SECTION, USE FLAT CONCRETE LID INSTEAD.

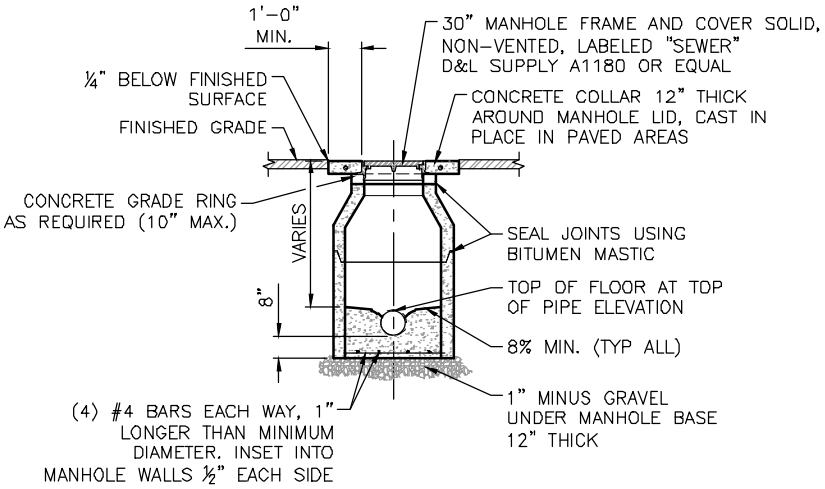

TYPICAL MANHOLE SECTION

SCALE:NOT TO SCALE

STATEMENT OF USE
THIS DOCUMENT AND ANY ILLUSTRATIONS HEREON ARE PROVIDED AS STANDARD CONSTRUCTION DETAILS WITHIN SYRACUSE CITY. DEVIATION FROM THIS DOCUMENT REQUIRES APPROVAL OF SYRACUSE CITY. SYRACUSE CITY CORPORATION CAN NOT BE HELD LIABLE FOR MISUSE OR CHANGES REGARDING THIS DOCUMENT.

NO.	REVISION DESCRIPTION	BY	APR.	DATE

CAD FILE: SYRACUSE CITY STANDARDS
DRAWN BY: JDM/ELC
DESIGN BY: NQS
CHECKED BY: RCW
LAST UPDATED: 11/1/2011
DATE ADOPTED: XX/XX/XX

SYRACUSE EST. CITY 1935

DEVELOPMENT STANDARDS
SYRACUSE CITY CORPORATION

SEWER AND LAND DRAIN STANDARDS

SHEET 17

Plot Date 11/8/2011 10:01 PM Plotted By: Kurt Fredericks
File Path: C:\STANDARDS\CITY STANDARDS\UPDATED STANDARDS\SYRACUSE SYRACUSE CITY STANDARDS.DWG

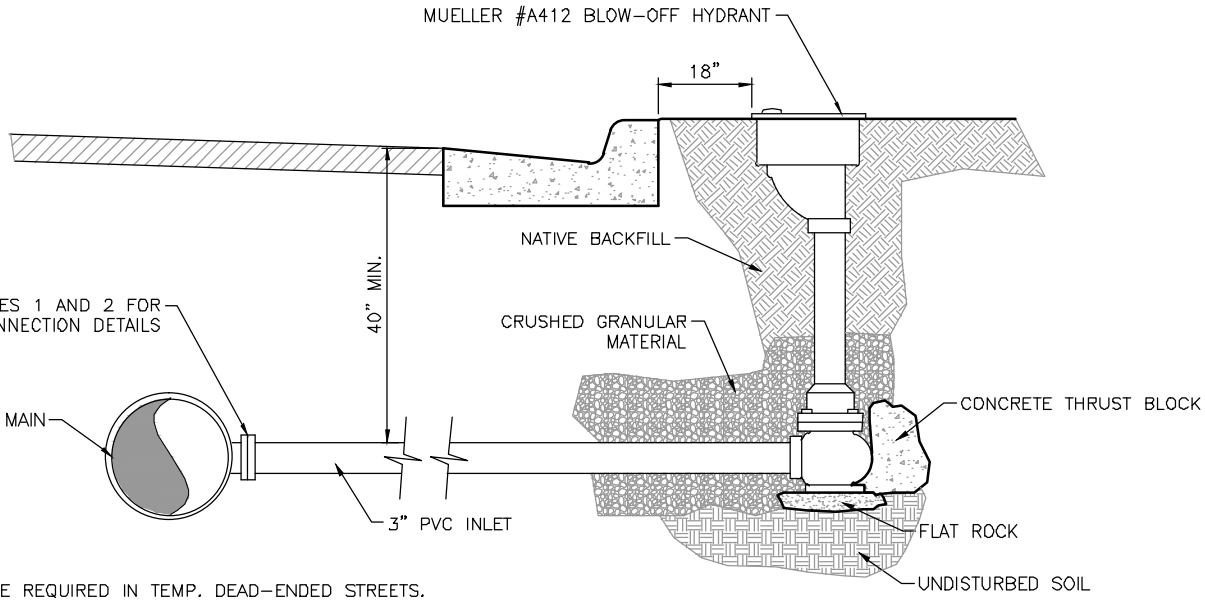

NOTES:
1. BLOW-OFF VALVE REQUIRED IN TEMP. DEAD-ENDED STREETS.
2. CUL-DE-SAC CONNECTIONS TO BE MADE USING MAIN SIZE x 3" MJ REDUCER.
3. ON TEMPORARILY DEAD-ENDED STREETS CONNECTIONS SHALL BE MADE USING MAIN SIZE x 3" MJ TEE.

TYPICAL BLOWOFF VALVE DETAIL

SCALE:NOT TO SCALE

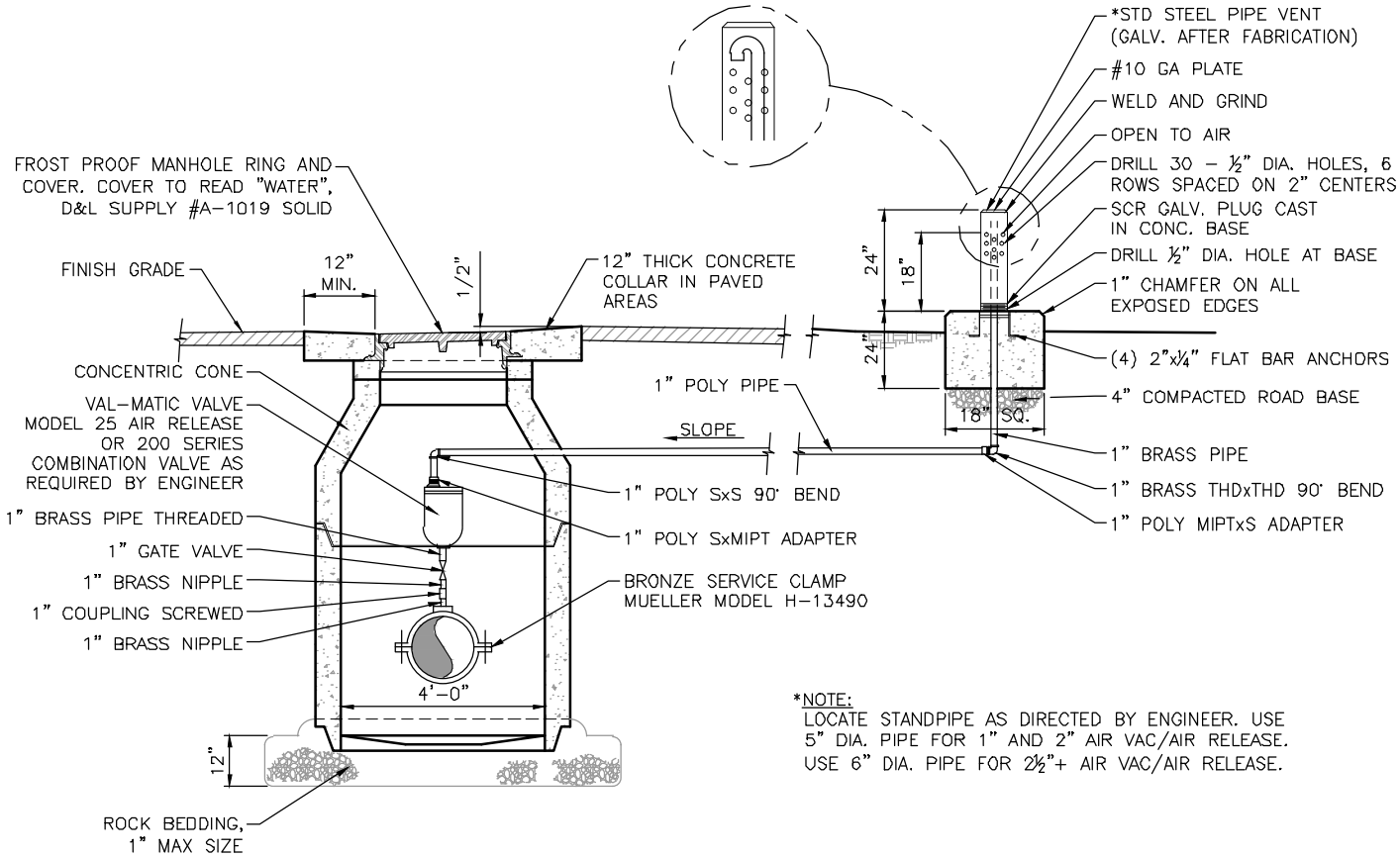

*NOTE:
LOCATE STANDPIPE AS DIRECTED BY ENGINEER. USE 5" DIA. PIPE FOR 1" AND 2" AIR VAC/AIR RELEASE. USE 6" DIA. PIPE FOR 2½"+ AIR VAC/AIR RELEASE.

TYPICAL AIR RELEASE VALVE MANHOLE AND SPLASH BLOC

SCALE:NOT TO SCALE

STATEMENT OF USE
THIS DOCUMENT AND ANY ILLUSTRATIONS HEREON ARE PROVIDED AS STANDARD CONSTRUCTION DETAILS WITHIN SYRACUSE CITY. DEVIATION FROM THIS DOCUMENT REQUIRES APPROVAL OF SYRACUSE CITY. SYRACUSE CITY CORPORATION CAN NOT BE HELD LIABLE FOR MISUSE OR CHANGES REGARDING THIS DOCUMENT.

NO.	REVISION DESCRIPTION	BY	APR.	DATE

CAD FILE: SYRACUSE CITY STANDARDS
DRAWN BY: JDM/ELC
DESIGN BY: NQS
CHECKED BY: RCW
LAST UPDATED: 11/1/2011
DATE ADOPTED: XX/XX/XX

SYRACUSE EST. CITY 1935

DEVELOPMENT STANDARDS
SYRACUSE CITY CORPORATION

CULINARY DETAILS

SHEET 18

Plot Date 11/8/2011 Layout: PM Plotted By: Kurt Fredericks
File Path: F:\STANDARDS\CITY STANDARDS\PRIVATE STANDARDS\SYRACUSE SYRACUSE CITY STANDARDS.DWG

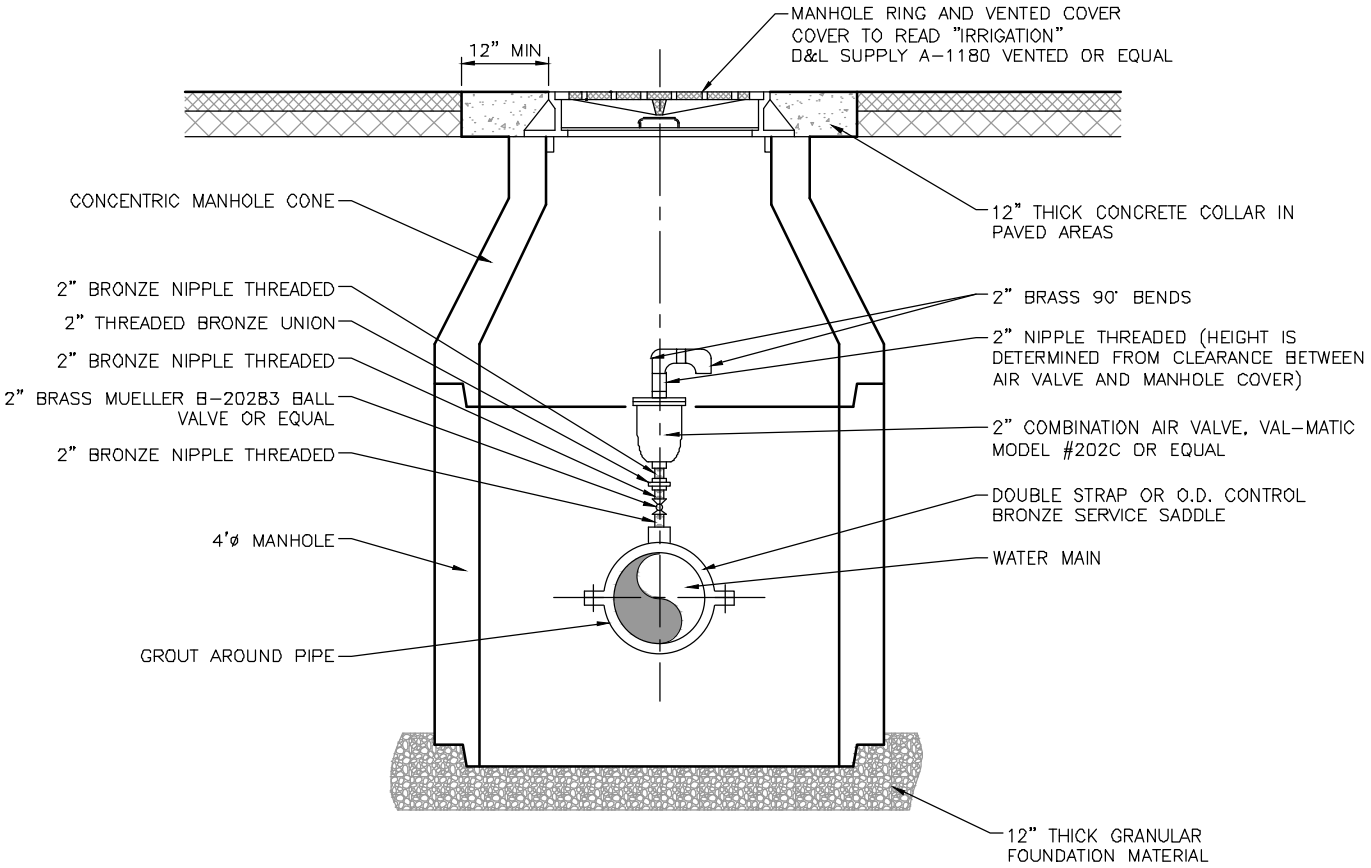

COMBINATION AIR VALVE DETAIL

SCALE:NOT TO SCALE

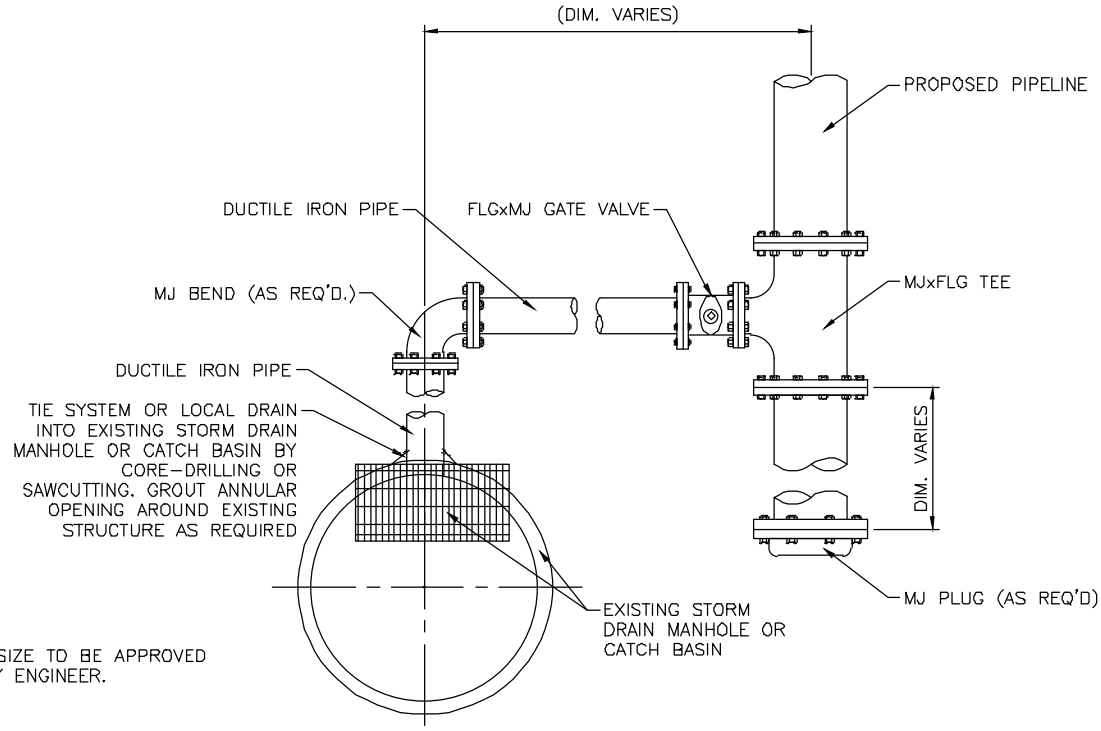

NOTE:
DRAIN SIZE TO BE APPROVED BY CITY ENGINEER.

LOCAL SYSTEM DRAIN VALVE DETAIL

SCALE:NOT TO SCALE

STATEMENT OF USE

THIS DOCUMENT AND ANY ILLUSTRATIONS HEREON ARE PROVIDED AS STANDARD CONSTRUCTION DETAILS WITHIN SYRACUSE CITY. DEVIATION FROM THIS DOCUMENT REQUIRES APPROVAL OF SYRACUSE CITY. SYRACUSE CITY CORPORATION CAN NOT BE HELD LIABLE FOR MISUSE OR CHANGES REGARDING THIS DOCUMENT.

NO.	REVISION DESCRIPTION	BY	APR.	DATE

CAD FILE: SYRACUSE CITY STANDARDS
DRAWN BY: JDM/ELC
DESIGN BY: NQS
CHECKED BY: RCW
LAST UPDATED: 11/1/2011
DATE ADOPTED: XX/XX/XX

SYRACUSE EST. CITY 1935

DEVELOPMENT STANDARDS
SYRACUSE CITY CORPORATION

COMBINATION AIR VALVE DETAIL (SECONDARY WATER ONLY)

SHEET 19

Plot Date 11/8/2011 1:02 PM Plotted By: Kurt Fredericks
File Path: C:\STANDARDS\CITY STANDARDS\DEVELOPED\TEC STANDARDS\SYRACUSE SYRACUSE CITY STANDARDS.DWG

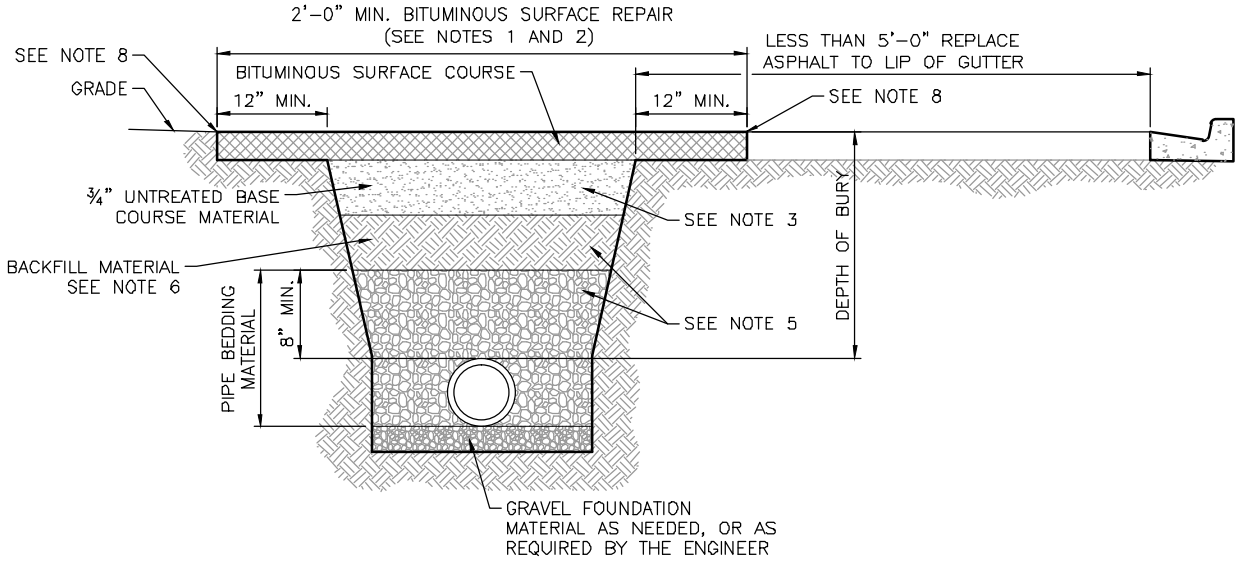

BITUMINOUS SURFACE REPAIR TRENCH SECTION

NOTES:

1. SAW CUT BITUMINOUS ASPHALT SURFACE 24" WIDER THAN TRENCH ON EACH SIDE FOR FINAL TRENCH REPAIR WHERE BITUMINOUS SURFACE EXISTS.
2. BITUMINOUS SURFACE IS TO BE 4" MIN. OR TO MATCH EXISTING THICKNESS, WHICHEVER IS GREATER, AND 6" FOR STATE ROADS, OR MATCH EXISTING THICKNESS, WHICHEVER IS GREATER.
3. FOR TRENCH REPAIR, ¾" UNTREATED BASE COURSE MATERIAL IS TO BE 12" OR TO MATCH EXISTING THICKNESS, WHICHEVER IS GREATER, FOR NEW ROAD CONSTRUCTION, ¾" UNTREATED BASE COURSE MATERIAL IS TO BE 10" MIN. OR AS DIRECTED BY THE ENGINEER. BASE COURSE TO BE COMPACTED TO 96% ASTM D-1557.
4. SLOPE TRENCH SIDES TO MEET OSHA SAFETY REGULATIONS (LATEST REVISION).
5. BACKFILL AND BEDDING TO BE COMPACTED TO 96% ASTM D-1557 IN ROADWAYS AND 90% IN LANDSCAPED AREAS.
6. GRANULAR SUB-BASE 12" THICK BETWEEN BASE COURSE AND BACKFILL LAYERS AS DIRECTED BY ENGINEER. COMPACT TO 96% ASTM D-1557.
7. LOCATOR TAPE SHALL BE PLACED 12" ABOVE CENTERLINE OF PIPE FOR PRESSURIZED PIPELINES.
8. INITIAL PAVEMENT CUT SHALL BE AT EDGE OF OPEN TRENCH. A SECOND PAVEMENT CUT TO WIDEN BITUMINOUS SURFACE REPAIR AREA ONCE TRENCH IS BACKFILLED AND COMPACTED. MINIMUM WIDENED DISTANCE TO SECOND CUT IS SHOWN IN THE TABLE BELOW.

TRENCH EDGE TO 2ND CUT	12"	24"	36"
MAX EXCAVATION DEPTH	30"	48"	>48"

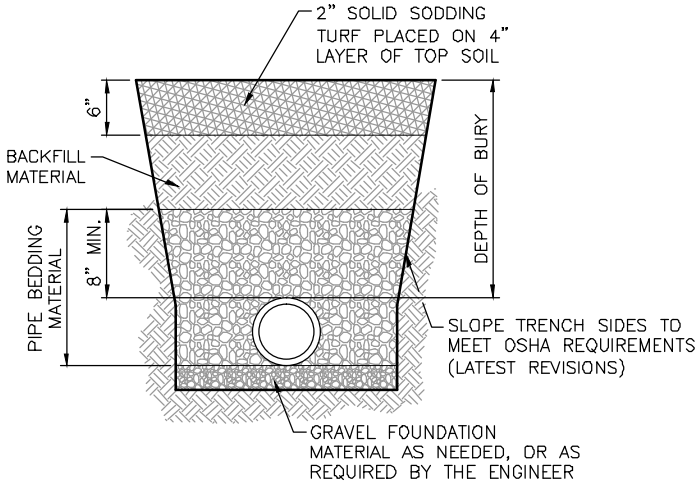

TURF SURFACE TRENCH SECTION

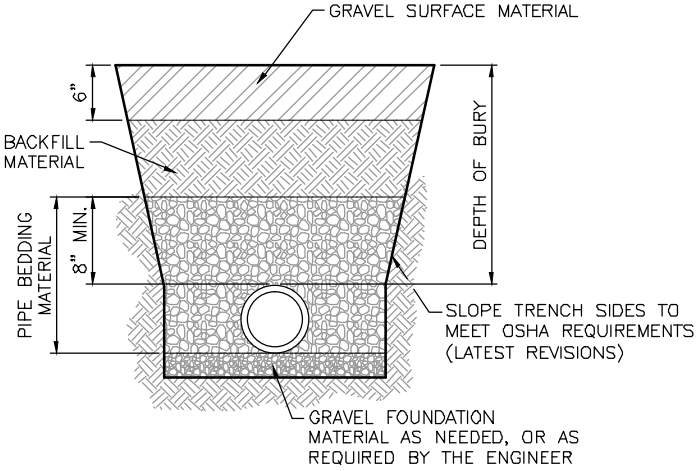

GRAVEL SURFACE TRENCH SECTION

TYPICAL TRENCH SECTIONS

SCALE: NOT TO SCALE

STATEMENT OF USE

THIS DOCUMENT AND ANY ILLUSTRATIONS HEREON ARE PROVIDED AS STANDARD CONSTRUCTION DETAILS WITHIN SYRACUSE CITY. DEVIATION FROM THIS DOCUMENT REQUIRES APPROVAL OF SYRACUSE CITY. SYRACUSE CITY CORPORATION CAN NOT BE HELD LIABLE FOR MISUSE OR CHANGES REGARDING THIS DOCUMENT.

NO.	REVISION DESCRIPTION	BY	APR.	DATE

CAD FILE: SYRACUSE CITY STANDARDS
DRAWN BY: JDM/ELC
DESIGN BY: NQS
CHECKED BY: RCW
LAST UPDATED: 11/1/2011
DATE ADOPTED: XX/XX/XX

SYRACUSE EST. CITY 1935

DEVELOPMENT STANDARDS
SYRACUSE CITY CORPORATION

BITUMINOUS SURFACE REPAIR AND TYPICAL TRENCH SECTIONS

SHEET 20

Plot Date 11/8/2011 Layout: PM Plotted By: Kurt Fredericks
File Path: F:\STANDARDS\CITY STANDARDS\DEVELOPED STANDARDS\SYRACUSE SYRACUSE CITY STANDARDS.DWG

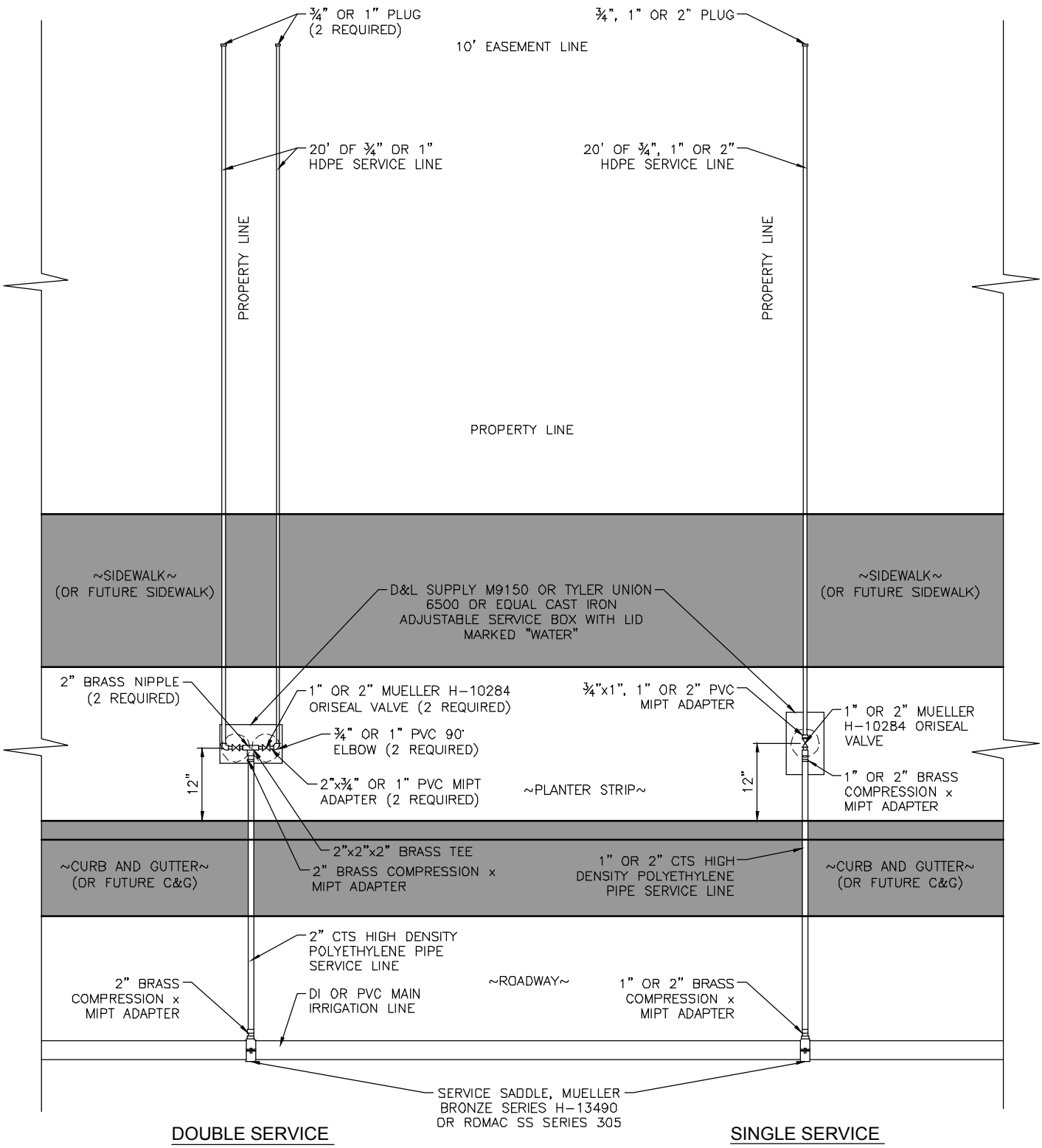

PRESSURE IRRIGATION SERVICE CONNECTIONS DETAIL

SCALE: NOT TO SCALE

STATEMENT OF USE

THIS DOCUMENT AND ANY ILLUSTRATIONS HEREON ARE PROVIDED AS STANDARD CONSTRUCTION DETAILS WITHIN SYRACUSE CITY. DEVIATION FROM THIS DOCUMENT REQUIRES APPROVAL OF SYRACUSE CITY. SYRACUSE CITY CORPORATION CAN NOT BE HELD LIABLE FOR MISUSE OR CHANGES REGARDING THIS DOCUMENT.

NO.	REVISION DESCRIPTION	BY	APR.	DATE

CAD FILE: SYRACUSE CITY STANDARDS
DRAWN BY: JDM/ELC
DESIGN BY: NQS
CHECKED BY: RCW
LAST UPDATED: 11/1/2011
DATE ADOPTED: XX/XX/XX

SYRACUSE EST. CITY 1935

DEVELOPMENT STANDARDS
SYRACUSE CITY CORPORATION

TYPICAL PRESSURE IRRIGATION SERVICE CONNECTIONS

SHEET 21

File Path: F:\STANDARDS\CITY STANDARDS\UPDATED STANDARDS\SYRACUSE SYRACUSE CITY STANDARDS.DWG
Plot Date 11/8/2011 10:32 PM Plotted By: Kurt S Fredericks

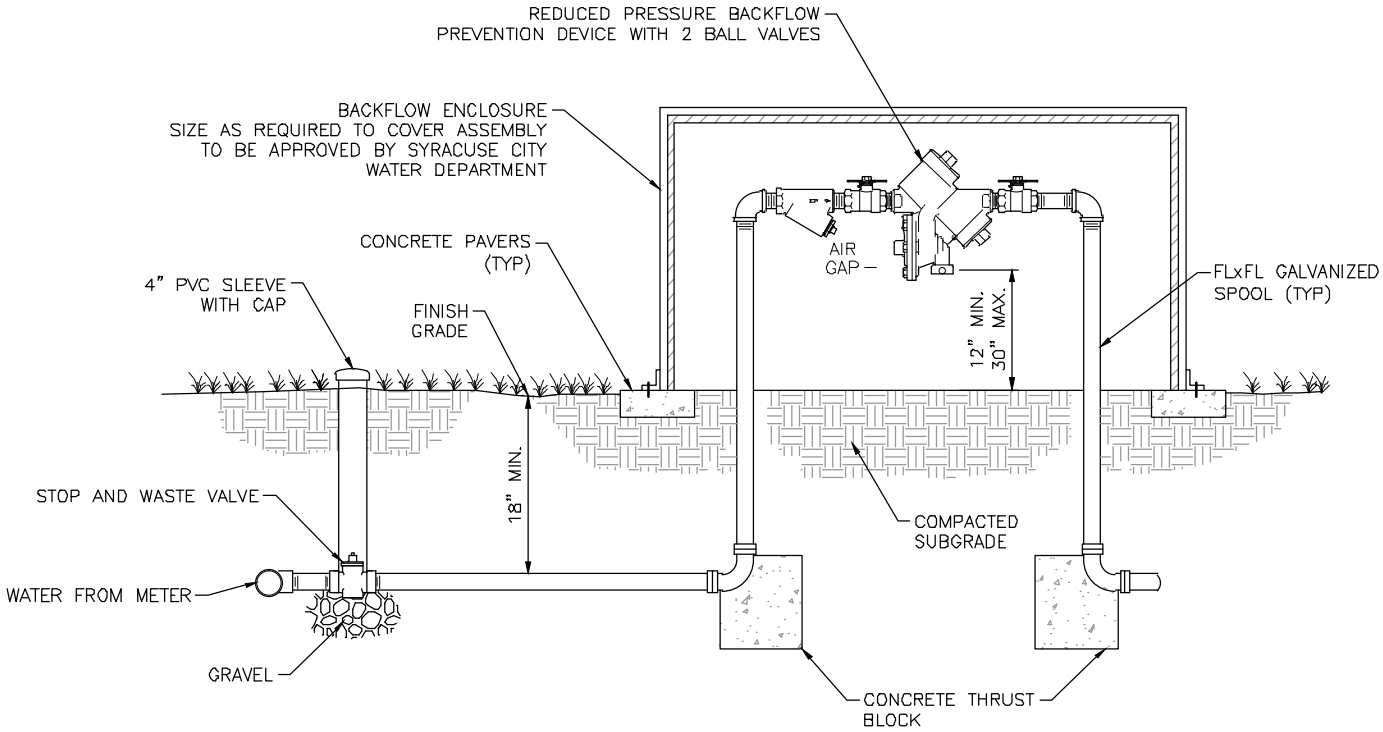

NOTES:

1. ALL WORK MUST BE INSPECTED BY SYRACUSE CITY WATER DEPARTMENT PRIOR TO BACKFILL.
2. INITIAL TESTING OF BACKFLOW ASSEMBLY TO BE DONE BY DEVELOPER AND REPORTED TO SYRACUSE CITY WATER DEPARTMENT.
3. ALL BURIED DUCTILE IRON PIPES ARE TO BE POLY-WRAPPED.
4. CONSULT WITH DEPARTMENT ENGINEER ON CONFIGURATION FOR 8" CONNECTION TO SERVICE MORE THAN 120 LOTS.

REDUCED PRESSURE BAC□FLOW PREVENTION ASSEMBLY

SCALE:NOT TO SCALE

STATEMENT OF USE
THIS DOCUMENT AND ANY ILLUSTRATIONS HEREON ARE PROVIDED AS STANDARD CONSTRUCTION DETAILS WITHIN SYRACUSE CITY. DEVIATION FROM THIS DOCUMENT REQUIRES APPROVAL OF SYRACUSE CITY. SYRACUSE CITY CORPORATION CAN NOT BE HELD LIABLE FOR MISUSE OR CHANGES REGARDING THIS DOCUMENT.

NO.	REVISION DESCRIPTION	BY	APR.	DATE

CAD FILE: SYRACUSE CITY STANDARDS
DRAWN BY: JDM/ELC
DESIGN BY: NQS
CHECKED BY: RCW
LAST UPDATED: 11/1/2011
DATE ADOPTED: XX/XX/XX

SYRACUSE EST. CITY 1935

DEVELOPMENT STANDARDS
SYRACUSE CITY CORPORATION

REDUCED PRESSURE BACKFLOW PREVENTION ASSEMBLY

SHEET 22

Plot Date 11/8/2011 10:32 AM Plotted By: Kurt Fredericks
File Path: C:\STANDARDS\CITY STANDARDS\DEVELOPER\TEC STANDARDS\SYRACUSE SYRACUSE CITY STANDARDS.DWG

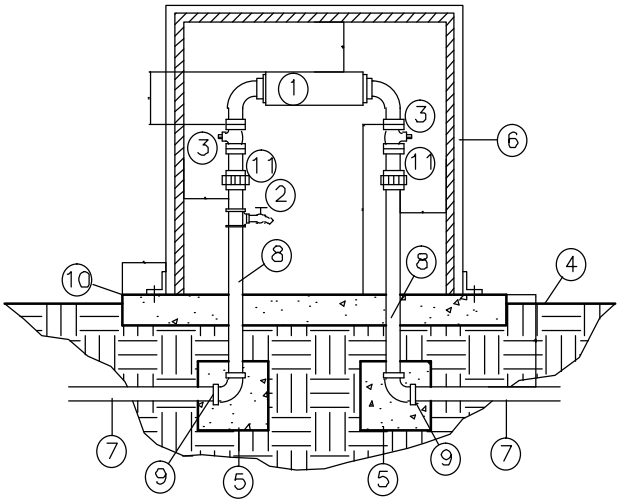

1. INLINE FILTER – SEE IRRIGATION EQUIPMENT SCHEDULE
2. ¾" BRASS HOSE BIB (W/ SADDLE OR TEE)
3. FL WAFER BUTTERFLY VALVE 4" AND LARGER FULL PORT APPOLO BALL VALVE 3" AND SMALLER
4. FINISH GRADE
5. CONCRETE THRUST BLOCKS (TYP). WRAP PIPES W/ 10 MIL TAPE. CAST AGAINST UNDISTURBED SOIL
6. FILTER ENCLOSURE – SEE IRRIGATION EQUIPMENT SCHEDULE (INSTALL PER MANUFACTURER'S SPECIFICATIONS)
7. MAIN LINE – SEE IRRIGATION SCHEDULE AND PLANS FOR SIZE AND MATERIAL
8. BRASS NIPPLE LENGTH AS REQUIRED (TYP 3" AND SMALLER)
9. ELBOW AND FLANGE ADAPTER AS NEEDED
10. 4" THICK CONCRETE PAD (SIZE AS REQUIRED)
11. ACTION UNION (ON NON FLANGED PIPE)

FILTER ASSEMBLY □□" AND SMALLER□

SCALE: NOT TO SCALE

STATEMENT OF USE

THIS DOCUMENT AND ANY ILLUSTRATIONS HEREON ARE PROVIDED AS STANDARD CONSTRUCTION DETAILS WITHIN SYRACUSE CITY. DEVIATION FROM THIS DOCUMENT REQUIRES APPROVAL OF SYRACUSE CITY. SYRACUSE CITY CORPORATION CAN NOT BE HELD LIABLE FOR MISUSE OR CHANGES REGARDING THIS DOCUMENT.

NO.	REVISION DESCRIPTION	BY	APR.	DATE

CAD FILE: SYRACUSE LANDSCAPE STDS
DRAWN BY: JDM/ELC
DESIGN BY: NQS
CHECKED BY: RCW
LAST UPDATED: 11/3/2011
DATE ADOPTED: XX/XX/XX

SYRACUSE EST. CITY 1935

DEVELOPMENT STANDARDS
SYRACUSE CITY CORPORATION

FILTER ASSEMBLY DETAIL - 3 INCHES AND SMALLER

SHEET L1

Plot Date: 11/3/2011 6:12 PM Plotted By: Kurt Fredericks
File Path: F:\STANDARDS\-JOB LANDSCAPE CITY STANDARDS SYRACUSE\SYRACUSE LANDSCAPE STD.DWG

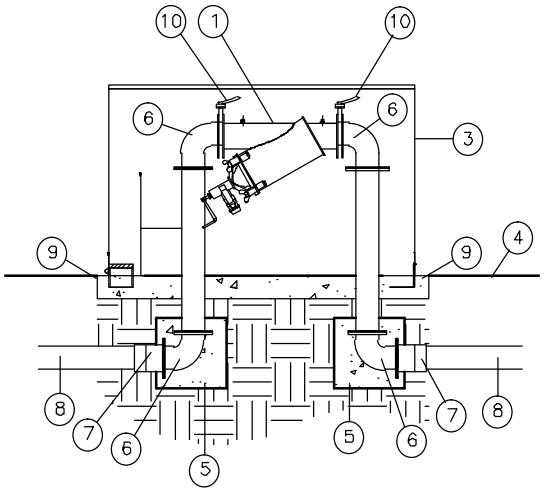

NOTE: INSTALL FILTER OFF OF CENTER TO ALLOW FOR COMPLETE ROTATION OF BRUSH AWAY HANDLE AND FOR REMOVAL OF FILTER SCREEN.

1. INLINE FILTER – SEE IRRIGATION EQUIPMENT SCHEDULE
2. FLxFL, DUCTILE IRON SPOOL (LENGTH AS REQUIRED)
3. FILTER ENCLOSURE – SEE IRRIGATION EQUIPMENT SCHEDULE
4. FINISH GRADE
5. CONCRETE THRUST BLOCKS (TYP). WRAP PIPES W/ 10 MIL TAPE. CAST AGAINST UNDISTURBED SOIL
6. FLANGE X FLANGE DUCTILE IRON 90
7. DUCTILE IRON FLANGE X BELL ADAPTER (SIZE AS REQURIED)
8. MAIN LINE – SEE IRRIGATION SCHEDULE FOR SIZE AND MATERIAL
9. 4" THICK CONCRETE PAD (SIZE AS REQUIRED)
10. STEEL BUTTERFLY VALVE

FILTER ASSEMBLY □□" AND LARGER□

SCALE: NOT TO SCALE

STATEMENT OF USE

THIS DOCUMENT AND ANY ILLUSTRATIONS HEREON ARE PROVIDED AS STANDARD CONSTRUCTION DETAILS WITHIN SYRACUSE CITY. DEVIATION FROM THIS DOCUMENT REQUIRES APPROVAL OF SYRACUSE CITY. SYRACUSE CITY CORPORATION CAN NOT BE HELD LIABLE FOR MISUSE OR CHANGES REGARDING THIS DOCUMENT.

NO.	REVISION DESCRIPTION	BY	APR.	DATE

CAD FILE: SYRACUSE LANDSCAPE STDS
DRAWN BY: JDM/ELC
DESIGN BY: NQS
CHECKED BY: RCW
LAST UPDATED: 11/3/2011
DATE ADOPTED: XX/XX/XX

SYRACUSE EST. CITY 1935

DEVELOPMENT STANDARDS
SYRACUSE CITY CORPORATION

FILTER ASSEMBLY DETAIL - 4 INCHES AND LARGER

SHEET L2

Plot Date 11/3/2011 6:12 PM Plotted By: Kurt Fredericks
File Path: F:\STANDARDS\-JUB LANDSCAPE CITY STANDARDS SYRACUSE\SYRACUSE LANDSCAPE ST-2.DWG

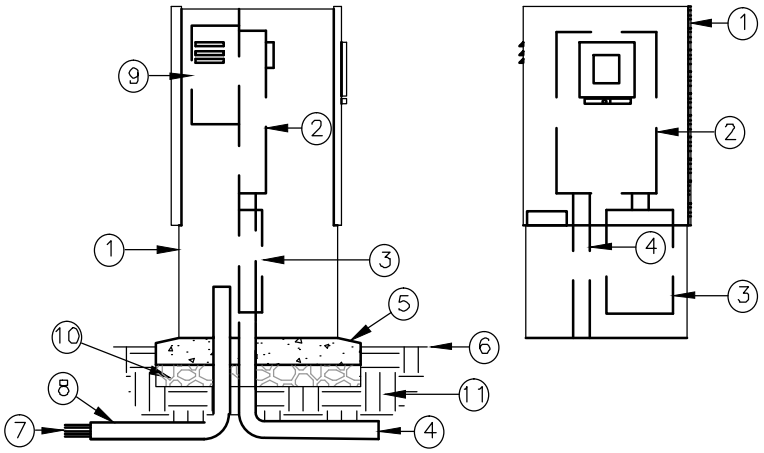

SIDE VIEW

FRONT VIEW

1. METERED CONTROLLER ENCLOSURE – SEE IRRIGATION EQUIPMENT SCHEDULE
2. METER SOCKET WITH TEST BLOCKS
3. LOAD CENTER
4. CONDUIT (NOT SUPPLIED) FOR LINE FEED INTO METER
5. POURED CONCRETE BASE, 4" MIN. THICKNESS, EXTEND 6" BEYOND OUTSIDE DIMENSIONS OF ENCLOSURE WITH 0.5% MIN. SLOPE FOR DRAINAGE

NOTE: SEE STANDARD GROUNDING ROD AND PLATE DETAIL.

6. FINISH GRADE
7. DIRECT BURIAL CONTROL WIRES TO CONTROL VALVES
8. PVC LONG SWEEP ELL – USE ONE SWEEP ELL PER CONTROLLER INSTALL ONE EXTRA ELL FOR FUTURE USE
9. AUTOMATIC CONTROLLER – REMOVE FRONT DOORS OF CONTROLLER IF MORE THEN ONE IS INSTALLED AND PLACE SIDE BY SIDE
10. 6" MIN. ROAD BASE
11. SUBGRADE COMPACTED TO 95% MDD

METERED CONTROLLER ENCLOSURE

SCALE: NOT TO SCALE

STATEMENT OF USE
THIS DOCUMENT AND ANY ILLUSTRATIONS HEREON ARE PROVIDED AS STANDARD CONSTRUCTION DETAILS WITHIN SYRACUSE CITY. DEVIATION FROM THIS DOCUMENT REQUIRES APPROVAL OF SYRACUSE CITY. SYRACUSE CITY CORPORATION CAN NOT BE HELD LIABLE FOR MISUSE OR CHANGES REGARDING THIS DOCUMENT.

NO.	REVISION DESCRIPTION	BY	APR.	DATE

CAD FILE: SYRACUSE LANDSCAPE STDS
DRAWN BY: JDM/ELC
DESIGN BY: NQS
CHECKED BY: RCW
LAST UPDATED: 11/3/2011
DATE ADOPTED: XX/XX/XX

SYRACUSE EST. CITY 1935

DEVELOPMENT STANDARDS
SYRACUSE CITY CORPORATION

METERED CONTROLLER ENCLOSURE DETAIL

SHEET L3

Plot Date 11/3/11 6:12 PM Plotted By: Kurt Fredericks
File Path: C:\STANDARDS\-JOB LANDSCAPE CITY STANDARDS SYRACUSE\SYRACUSE LANDSCAPE STDS.DWG

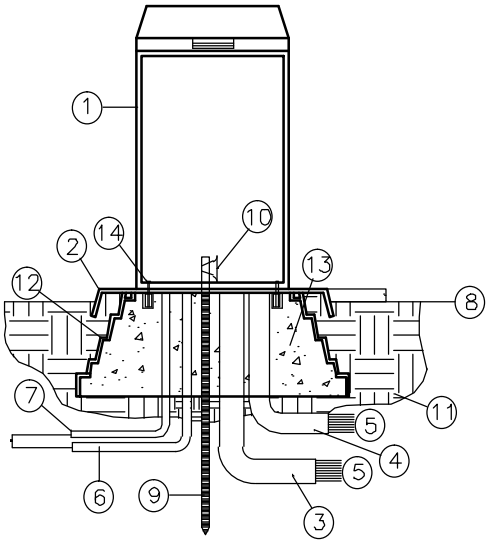

1. CONTROLLER AND CONTROLLER ENCLOSURE – SEE IRRIGATION EQUIPMENT SCHEDULE
2. QUICKPAD 3/16" MIN. THICKNESS ALUMINUM POWDER COATED PREFORMED PAD
3. PVC SWEEP ELL STATIONS 1–24
4. PVC SWEEP ELL STATIONS 25–48 (IF APPLICABLE)
5. DIRECT BURIAL CONTROL WIRES TO CONTROL VALVES
6. 110–VOLT SERVICE IN CONDUIT
7. EV–CAB–COM CABLE 1" CONDUIT (IF APPLICABLE)
8. FINISH GRADE
9. 5/8"x8' COPPER CLAD GROUND ROD
10. CADWELD CLAMP CONNECTED TO CONTROLLER GROUND WIRE
11. SUBGRADE COMPACTED TO 90%
12. PREFORMED PAD SUPPORT BASE
13. FILL INSIDE BASE WITH PEA GRAVEL
14. QUICKPAD FASTENING BRACKET (2)

PEDESTAL MOUNT CONTROLLER

SCALE: NOT TO SCALE

STATEMENT OF USE

THIS DOCUMENT AND ANY ILLUSTRATIONS HEREON ARE PROVIDED AS STANDARD CONSTRUCTION DETAILS WITHIN SYRACUSE CITY. DEVIATION FROM THIS DOCUMENT REQUIRES APPROVAL OF SYRACUSE CITY. SYRACUSE CITY CORPORATION CAN NOT BE HELD LIABLE FOR MISUSE OR CHANGES REGARDING THIS DOCUMENT.

NO.	REVISION DESCRIPTION	BY	APR.	DATE

CAD FILE: SYRACUSE LANDSCAPE STDS
DRAWN BY: JDM/ELC
DESIGN BY: NQS
CHECKED BY: RCW
LAST UPDATED: 11/3/2011
DATE ADOPTED: XX/XX/XX

SYRACUSE EST. CITY 1935

DEVELOPMENT STANDARDS
SYRACUSE CITY CORPORATION

PEDESTAL-MOUNT CONTROLLER DETAIL

SHEET L4

Plot Date 11/3/11 10:45 PM Plotted By: Kurt Fredericks
File Path: C:\STANDARDS\-JUB LANDSCAPE CITY STANDARDS SYRACUSE\SYRACUSE LANDSCAPE STDS.DWG

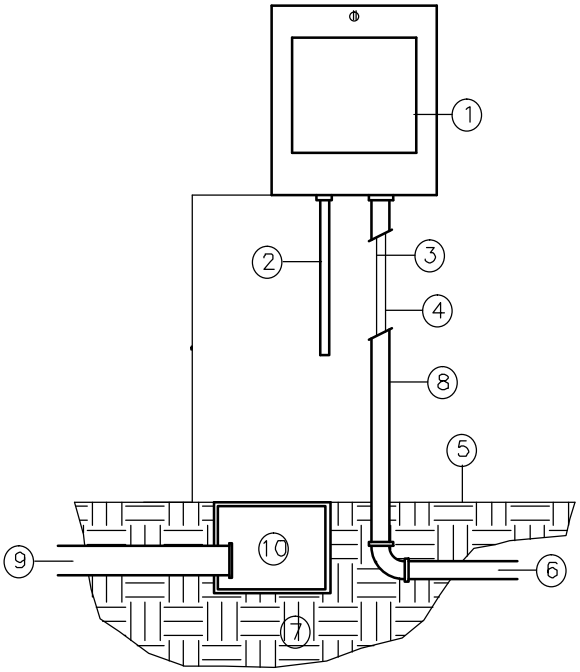

1. CONTROLLER ENCLOSURE WITH CONTROLLER – SEE IRRIGATION EQUIPMENT SCHEDULE
2. 120–VOLT WIRE IN RIGID CONDUIT
3. COMMON WIRE
4. CONTROL WIRES
5. FINISH GRADE
6. UF DIRECT–BURIAL WIRES TO REMOTE CONTROL VALVES
7. SUBGRADE COMPACTED TO 95% MIN.
8. CONDUIT TO MAINLINE
9. 3" CONDUIT FOR FUTURE EXPANSION
10. ELECTRICAL PULL BOX

WALL MOUNT CONTROLLER

SCALE: NOT TO SCALE

STATEMENT OF USE

THIS DOCUMENT AND ANY ILLUSTRATIONS HEREON ARE PROVIDED AS STANDARD CONSTRUCTION DETAILS WITHIN SYRACUSE CITY. DEVIATION FROM THIS DOCUMENT REQUIRES APPROVAL OF SYRACUSE CITY. SYRACUSE CITY CORPORATION CAN NOT BE HELD LIABLE FOR MISUSE OR CHANGES REGARDING THIS DOCUMENT.

NO.	REVISION DESCRIPTION	BY	APR.	DATE

CAD FILE: SYRACUSE LANDSCAPE STDS
DRAWN BY: JDM/ELC
DESIGN BY: NQS
CHECKED BY: RCW
LAST UPDATED: 11/3/2011
DATE ADOPTED: XX/XX/XX

SYRACUSE EST. CITY 1935

DEVELOPMENT STANDARDS
SYRACUSE CITY CORPORATION

WALL-MOUNT CONTROLLER DETAIL

SHEET L5

Plot Date: 1/5/2011 10:48 AM Plotted By: Kurt Fredericks
File Path: C:\STANDARDS_JOB LANDSCAPE CITY STANDARDS SYRACUSE\SYRACUSE LANDSCAPE STDS.DWG

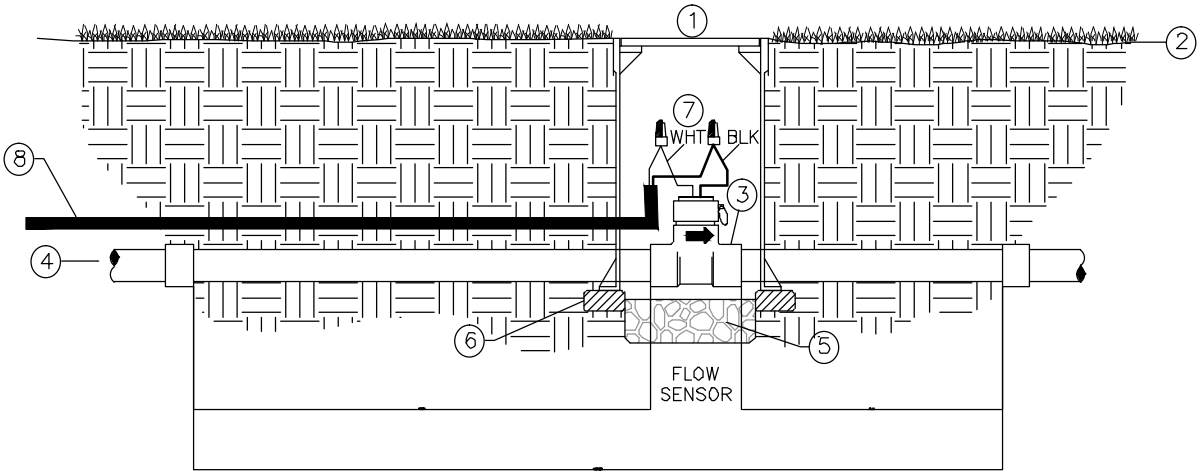

1. 10" ROUND GREEN PLASTIC VALVE BOX, W/ BOLT LOCK, CARSON OR EQUAL, MARKED "F.S." IN 2" WHITE LETTERS
2. FINISH GRADE
3. FLOW SENSOR
4. PVC MAINLINE
5. 5" MIN. DEPTH PEA GRAVEL
6. CONCRETE PAVERS ONLY
7. 3M DBR/Y WATER TIGHT WIRE CONNECTORS
8. SENSOR CABLE TO CONTROLLER

FLOW SENSOR INSTALLATION

SCALE: NOT TO SCALE

STATEMENT OF USE
THIS DOCUMENT AND ANY ILLUSTRATIONS HEREON ARE PROVIDED AS STANDARD CONSTRUCTION DETAILS WITHIN SYRACUSE CITY. DEVIATION FROM THIS DOCUMENT REQUIRES APPROVAL OF SYRACUSE CITY. SYRACUSE CITY CORPORATION CAN NOT BE HELD LIABLE FOR MISUSE OR CHANGES REGARDING THIS DOCUMENT.

NO.	REVISION DESCRIPTION	BY	APR.	DATE

CAD FILE: SYRACUSE LANDSCAPE STDS
DRAWN BY: JDM/ELC
DESIGN BY: NQS
CHECKED BY: RCW
LAST UPDATED: 11/3/2011
DATE ADOPTED: XX/XX/XX

SYRACUSE EST. CITY 1935

DEVELOPMENT STANDARDS
SYRACUSE CITY CORPORATION

FLOW SENSOR INSTALLATION DETAIL

SHEET
L6

Plot Date: 1/5/2011 10:43 PM Plotted By: Kurt Fredericks
File Path: C:\STANDARDS\-JOB LANDSCAPE CITY STANDARDS SYRACUSE\SYRACUSE LANDSCAPE STDS.DWG

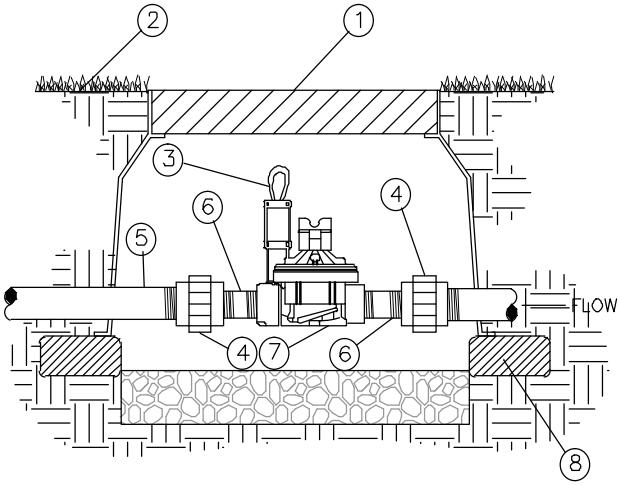

1. 18" GREEN JUMBO 1220 VALVE BOX W/ BOLT LOCK (CARSON OR APPROVED EQUAL). USE BOX EXTENSIONS AS NEEDED.
2. FINISH GRADE
3. WIRES TO SITE INTERFACE 18 GAUGE MIN. WIRE SIZE
4. ACTION UNION
5. PVC MAINLINE
6. SCH 80 NIPPLE (LENGTH AS REQUIRED)
7. MASTER VALVE – SEE IRRIGATION EQUIPMENT SCHEDULE
8. CONCRETE PAVERS ONLY

MASTER VALVE ASSEMBLY

SCALE: NOT TO SCALE

STATEMENT OF USE

THIS DOCUMENT AND ANY ILLUSTRATIONS HEREON ARE PROVIDED AS STANDARD CONSTRUCTION DETAILS WITHIN SYRACUSE CITY. DEVIATION FROM THIS DOCUMENT REQUIRES APPROVAL OF SYRACUSE CITY. SYRACUSE CITY CORPORATION CAN NOT BE HELD LIABLE FOR MISUSE OR CHANGES REGARDING THIS DOCUMENT.

NO.	REVISION DESCRIPTION	BY	APR.	DATE

CAD FILE: SYRACUSE LANDSCAPE STDS
DRAWN BY: JDM/ELC
DESIGN BY: NQS
CHECKED BY: RCW
LAST UPDATED: 11/3/2011
DATE ADOPTED: XX/XX/XX

SYRACUSE EST. CITY 1935

DEVELOPMENT STANDARDS
SYRACUSE CITY CORPORATION

MASTER VALVE ASSEMBLY DETAIL

SHEET L7

Plot Date 11/3/11 10:43 AM Plotted By: Kurt Fredericks
File Path: F:\STANDARDS\-JOB LANDSCAPE CITY STANDARDS SYRACUSE SYRACUSE LANDSCAPE STDS.DWG

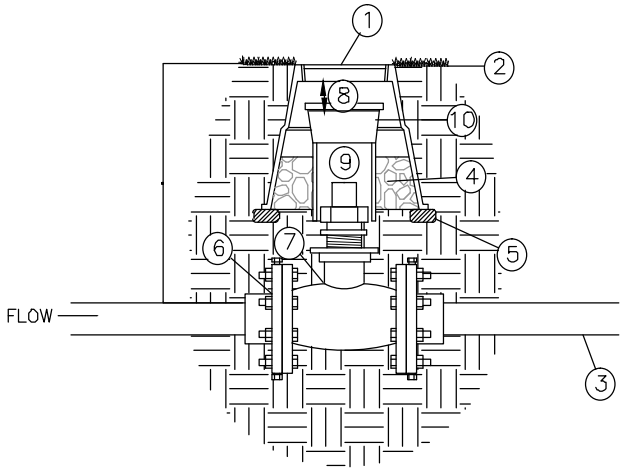

1. 10" ROUND PLASTIC VALVE BOX W/ BOLT LOCK (CARSON OR APPROVED EQUAL, MARKED "G.V." IN 2" WHITE LETTERS).
2. FINISH GRADE
3. PVC MAIN LINE
4. PEA GRAVEL
5. CONCRETE PAVERS ONLY
6. PVC FLANGE ADAPTER (TYP.)
7. FLANGED GATE VALVE – SEE IRRIGATION EQUIPMENT SCHEDULE
8. 3" MIN. CLEARANCE
9. 2" SQUARE OPERATING NUT
10. 4" PVC SCH. 40 PIPE SLEEVE (NOTCH TO FIT), CAPPED BY LOCKING VALVE CAP AND KEY.

ISOLATION GATE VALVE □FLANGED □" AND LARGER□

SCALE: NOT TO SCALE

STATEMENT OF USE

THIS DOCUMENT AND ANY ILLUSTRATIONS HEREON ARE PROVIDED AS STANDARD CONSTRUCTION DETAILS WITHIN SYRACUSE CITY. DEVIATION FROM THIS DOCUMENT REQUIRES APPROVAL OF SYRACUSE CITY. SYRACUSE CITY CORPORATION CAN NOT BE HELD LIABLE FOR MISUSE OR CHANGES REGARDING THIS DOCUMENT.

NO.	REVISION DESCRIPTION	BY	APR.	DATE

CAD FILE: SYRACUSE LANDSCAPE STDS
DRAWN BY: JDM/ELC
DESIGN BY: NQS
CHECKED BY: RCW
LAST UPDATED: 11/3/2011
DATE ADOPTED: XX/XX/XX

SYRACUSE EST. CITY 1935

DEVELOPMENT STANDARDS
SYRACUSE CITY CORPORATION

ISOLATION GATE VALVE DETAIL - FLANGED 3 INCH AND LARGER

SHEET L8

Plot Date 11/3/11 10:32 AM Plotted By: Kurt Fredericks
File Path: F:\STANDARDS\-JUB LANDSCAPE CITY STANDARDS SYRACUSE\SYRACUSE LANDSCAPE ST-3.DWG

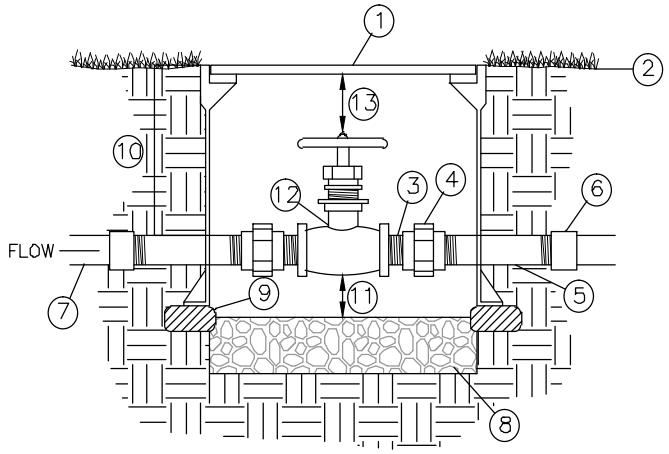

1. 18" GREEN JUMBO PLASTIC VALVE BOX W/ BOLT LOCK (CARSON OR APPROVED EQUAL, MARKED "G.V." IN 2" WHITE LETTERS). USE BOX EXTENSIONS AS NEEDED.
2. FINISH GRADE
3. CLOSE NIPPLE (TYP.)
4. ACTION UNIONS – SIZE AS REQUIRED
5. 12" MIN. GALVANIZED NIPPLE
6. PVC SCH. 80 FEMALE ADAPTER (TYP.)
7. PVC MAINLINE
8. 4" MIN. DEPTH PEA GRAVEL
9. CONCRETE PAVERS ONLY
10. DEPTH – SEE NOTES
11. 2" MIN. 5" MAX CLEARANCE
12. THREADED GATE VALVE WITH HANDWHEEL – SEE IRRIGATION EQUIPMENT SCHEDULE
13. 3" MIN. CLEARANCE

ISOLATION GATE VALVE □THREADED LESS THAN □"□

SCALE: NOT TO SCALE

STATEMENT OF USE

THIS DOCUMENT AND ANY ILLUSTRATIONS HEREON ARE PROVIDED AS STANDARD CONSTRUCTION DETAILS WITHIN SYRACUSE CITY. DEVIATION FROM THIS DOCUMENT REQUIRES APPROVAL OF SYRACUSE CITY. SYRACUSE CITY CORPORATION CAN NOT BE HELD LIABLE FOR MISUSE OR CHANGES REGARDING THIS DOCUMENT.

NO.	REVISION DESCRIPTION	BY	APR.	DATE

CAD FILE: SYRACUSE LANDSCAPE STDS
DRAWN BY: JDM/ELC
DESIGN BY: NQS
CHECKED BY: RCW
LAST UPDATED: 11/3/2011
DATE ADOPTED: XX/XX/XX

SYRACUSE EST. CITY 1935

DEVELOPMENT STANDARDS
SYRACUSE CITY CORPORATION

ISOLATION GATE VALVE DETAIL - THREADED LESS THAN 3 INCHES

SHEET L9

Plot Date 11/3/2011 10:02 PM Plotted By: Kurt S Fredericks
File Path: F:\STANDARDS\L-JUB LANDSCAPE CITY STANDARDS SYRACUSE\SYRACUSE LANDSCAPE STDS.DWG

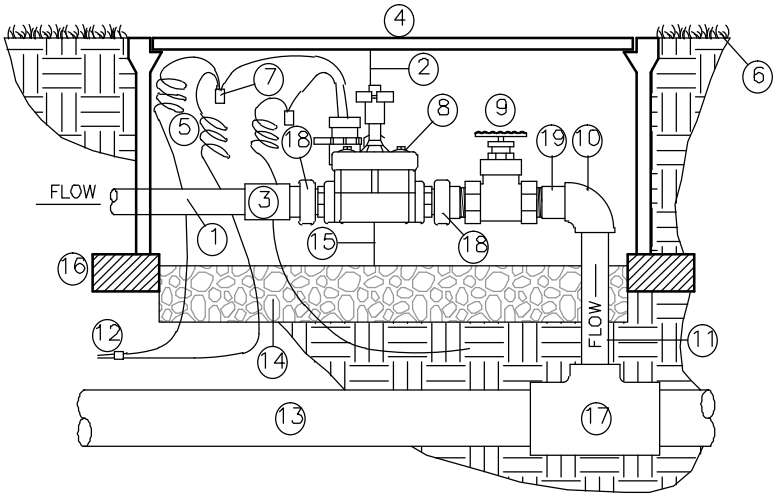

NOTES:
1. ONLY ONE VALVE PER BOX.
2. PLACE BOXES A MINIMUM OF 2' APART.
3. USE BOX EXTENSIONS AS REQUIRED.

1. PVC LATERAL LINE
2. 3" MIN. 6" MAX. CLEARANCE
3. COUPLER SCH. 80 SLIP TO SLIP
4. PLASTIC VALVE BOX W/ BOLT LOCK (CARSON OR APPROVED EQUAL) SIZE AS PER VALVE SIZE: 1" VALVE = 18" STANDARD 1419 BOX; 1½"–2" VALVE = 18" JUMBO 1220 BOX
5. PROVIDE 24" EXPANSION LOOP AT EACH WIRE CONNECTOR IN BOX
6. FINISH GRADE
7. WATER TIGHT WIRE CONNECTORS (TYP)
8. VALVE – RAIN BIRD PESB VALVE
9. BRASS GATE VALVE (MUELLER, MATCO, NIBCO) WITH NON–RISING STEM
10. PVC SCH. 80 ELL
11. PVC SCH. 80 PIPE, SOLVENT WELDED, LENGTH AS REQUIRED
12. WIRES TO CONTROLLER, TAPE AND BUNDLE EVERY 10' – SEE TRENCH DETAIL
13. MAIN LINE
14. 4" MIN. DEPTH ¾" WASHED GRAVEL
15. 4" MIN. CLEARANCE REQUIRED
16. CONCRETE PAVERS ONLY
17. PVC SCH. 80 TEE (OR ELL OR DUCTILE IRON SERVICE TEE)
18. ACTION UNION – PART 18010–XX
    PART 18011–XX
    PART 18012–XX
19. PVC TOE NIPPLE

CONTROL VALVE ASSEMBLY

SCALE: NOT TO SCALE

STATEMENT OF USE
THIS DOCUMENT AND ANY ILLUSTRATIONS HEREON ARE PROVIDED AS STANDARD CONSTRUCTION DETAILS WITHIN SYRACUSE CITY. DEVIATION FROM THIS DOCUMENT REQUIRES APPROVAL OF SYRACUSE CITY. SYRACUSE CITY CORPORATION CAN NOT BE HELD LIABLE FOR MISUSE OR CHANGES REGARDING THIS DOCUMENT.

NO.	REVISION DESCRIPTION	BY	APR.	DATE

CAD FILE: SYRACUSE LANDSCAPE STDS
DRAWN BY: JDM/ELC
DESIGN BY: NQS
CHECKED BY: RCW
LAST UPDATED: 11/3/2011
DATE ADOPTED: XX/XX/XX

SYRACUSE EST. CITY 1935

DEVELOPMENT STANDARDS
SYRACUSE CITY CORPORATION

CONTROL VALVE ASSEMBLY DETAIL

SHEET
L10

Plot Date: 11/3/2011 10:01 AM Plotted By: Kurt Fredericks
File Path: C:\STANDARDS\-JUB LANDSCAPE CITY STANDARDS SYRACUSE\SYRACUSE LANDSCAPE STDS.DWG

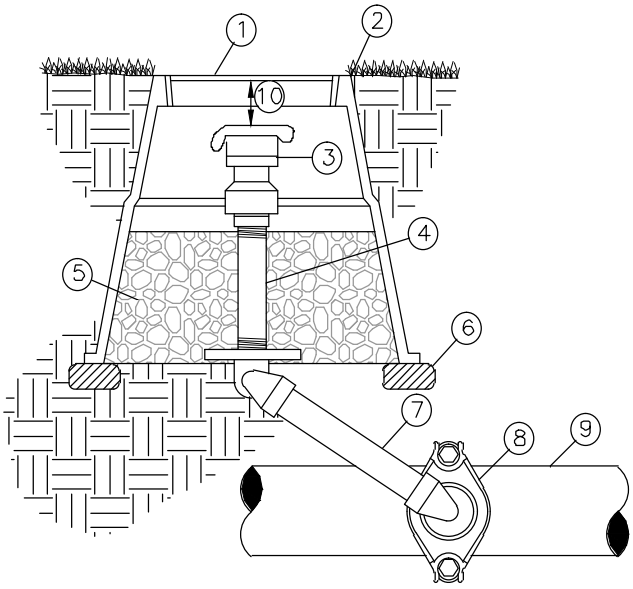

1. 10" ROUND GREEN PLASTIC VALVE BOX W/ BOLT LOCK, CARSON 910 OR EQUAL
2. FLUSH WITH GRADE
3. QUICK COUPLING VALVE – SEE EQUIPMENT SCHEDULE
4. BRASS NIPPLE, LENGTH AS REQUIRED
5. 6" MIN. DEPTH CLEAN PEA GRAVEL
6. CONCRETE PAVERS ONLY
7. 12" LASCO UNITIZED SWING JOINT W/ BRASS INSERT STABILIZER ELBOW, OR 12" SPEARS SWING JOINT RISER ASSEMBLY W/ BRASS FEMALE THREAD 90° ELL OUTLET
8. 3" AND LARGER, DUCTILE IRON SERVICE SADDLE W/ S.S. STRAP (SIDE MOUNTED, SIZE AS REQUIRED) 2 1/2" AND SMALLER, USE PVC SCH 80 TEE AND 90° (SIDE MOUNTED, SIZE AS REQUIRED)
9. PVC MAIN LINE
10. 3" MIN. 6" MAX. CLEARANCE

QUIC□ COUPLING VALVE ASSEMBLY □□" AND LARGER□

SCALE: NOT TO SCALE

STATEMENT OF USE

THIS DOCUMENT AND ANY ILLUSTRATIONS HEREON ARE PROVIDED AS STANDARD CONSTRUCTION DETAILS WITHIN SYRACUSE CITY. DEVIATION FROM THIS DOCUMENT REQUIRES APPROVAL OF SYRACUSE CITY. SYRACUSE CITY CORPORATION CAN NOT BE HELD LIABLE FOR MISUSE OR CHANGES REGARDING THIS DOCUMENT.

NO.	REVISION DESCRIPTION	BY	APR.	DATE

CAD FILE: SYRACUSE LANDSCAPE STDS
DRAWN BY: JDM/ELC
DESIGN BY: NQS
CHECKED BY: RCW
LAST UPDATED: 11/3/2011
DATE ADOPTED: XX/XX/XX

SYRACUSE EST. CITY 1935

DEVELOPMENT STANDARDS
SYRACUSE CITY CORPORATION

QUICK COUPLING VALVE ASSEMBLY DETAIL - 3 INCHES AND LARGER

SHEET L11

Plot Date 11/3/2011 10:01 PM Plotted By: Kurt S Fredericks
File Path: F:\STANDARDS\-JOB LANDSCAPE CITY STANDARDS SYRACUSE\SYRACUSE LANDSCAPE STDS.DWG

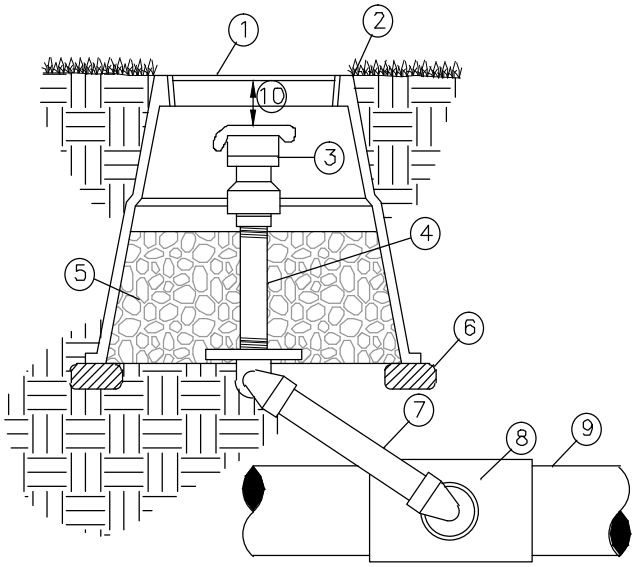

1. 10" ROUND GREEN PLASTIC VALVE BOX W/ BOLT LOCK, CARSON 910 OR EQUAL
2. FLUSH WITH GRADE
3. QUICK COUPLING VALVE – SEE EQUIPMENT SCHEDULE
4. BRASS NIPPLE, LENGTH AS REQUIRED
5. 6" MIN. DEPTH CLEAN PEA GRAVEL
6. CONCRETE PAVERS ONLY
7. 12" LASCO UNITIZED SWING JOINT W/ BRASS INSERT STABILIZER ELBOW, OR 12" SPEARS SWING JOINT RISER ASSEMBLY W/ BRASS FEMALE THREAD 90° ELL OUTLET
8. 2 1/2" AND SMALLER, USE PVC SCH 80 TEE AND 90° (SIDE MOUNTED, SIZE AS REQUIRED)
9. PVC MAIN LINE
10. 3" MIN. 6" MAX. CLEARANCE

QUIC□ COUPLING VALVE ASSEMBLY □□ □□□" AND SMALLER□

SCALE: NOT TO SCALE

STATEMENT OF USE

THIS DOCUMENT AND ANY ILLUSTRATIONS HEREON ARE PROVIDED AS STANDARD CONSTRUCTION DETAILS WITHIN SYRACUSE CITY. DEVIATION FROM THIS DOCUMENT REQUIRES APPROVAL OF SYRACUSE CITY. SYRACUSE CITY CORPORATION CAN NOT BE HELD LIABLE FOR MISUSE OR CHANGES REGARDING THIS DOCUMENT.

NO.	REVISION DESCRIPTION	BY	APR.	DATE

CAD FILE: SYRACUSE LANDSCAPE STDS
DRAWN BY: JDM/ELC
DESIGN BY: NQS
CHECKED BY: RCW
LAST UPDATED: 11/3/2011
DATE ADOPTED: XX/XX/XX

SYRACUSE EST. CITY 1935

DEVELOPMENT STANDARDS
SYRACUSE CITY CORPORATION

QUICK COUPLING VALVE ASSEMBLY DETAIL - 2.5 INCHES AND SMALLER

SHEET L12

Plot Date 11/3/2011 10:32 PM Plotted By: Kurt S Fredericks
File Path: F:\STANDARDS\L-12 LANDSCAPE CITY STANDARDS SYRACUSE\SYRACUSE LANDSCAPE STDS.DWG

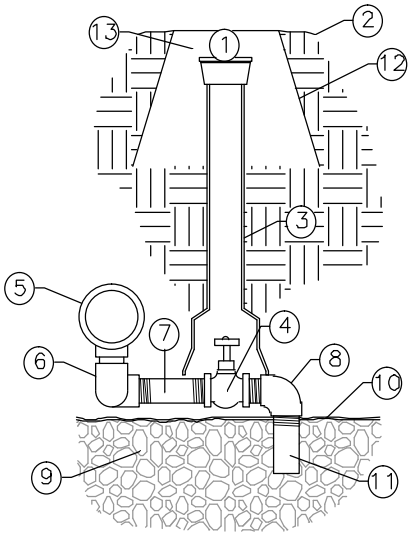

1. 2" PVC SCH. 40 PIPE SLEEVE (NOTCH TO FIT), CAPPED BY LOCKING VALVE CAP AND KEY.
2. FINISH GRADE
3. ADJUST HEIGHT AS REQUIRED
4. 3/4" VALVE (SEE IRRIGATION EQUIP. SHC.)
5. PVC MAINLINE & SERVICE TEE
6. (2)–FIPTxFIPT 90° ELL
   (2)–3/4" x CLOSE PVC NIPPLE
7. 3/4"x12" PVC SCH 80 NIPPLE
8. 3/4" 90° STREET ELL
9. 3/4" ROCK SUMP – 6 C.F. MIN. SIZE
10. FILTER FABRIC COVERING SUMP
11. 3/4" x 6" PVC SCH 80 TOE NIPPLE
12. 10" ROUND GREEN PLASTIC VALVE BOX, CARSON 910 OR EQUAL AT TOP OF GRADE
13. 3" TO 6" CLEAR SPACE

MANUAL DRAIN VALVE ASSEMBLY

SCALE: NOT TO SCALE

STATEMENT OF USE
THIS DOCUMENT AND ANY ILLUSTRATIONS HEREON ARE PROVIDED AS STANDARD CONSTRUCTION DETAILS WITHIN SYRACUSE CITY. DEVIATION FROM THIS DOCUMENT REQUIRES APPROVAL OF SYRACUSE CITY. SYRACUSE CITY CORPORATION CAN NOT BE HELD LIABLE FOR MISUSE OR CHANGES REGARDING THIS DOCUMENT.

NO.	REVISION DESCRIPTION	BY	APR.	DATE

CAD FILE: SYRACUSE LANDSCAPE STDS
DRAWN BY: JDM/ELC
DESIGN BY: NQS
CHECKED BY: RCW
LAST UPDATED: 11/3/2011
DATE ADOPTED: XX/XX/XX

SYRACUSE EST. CITY 1935

DEVELOPMENT STANDARDS
SYRACUSE CITY CORPORATION

MANUAL DRAIN VALVE ASSEMBLY DETAIL

SHEET
L13

Plot Date: 11/3/2011 10:02 PM Plotted By: Kurt S Fredericks
File Path: C:\STANDARDS\L-11-B LANDSCAPE CITY STANDARDS SYRACUSE\SYRACUSE LANDSCAPE STDS.DWG

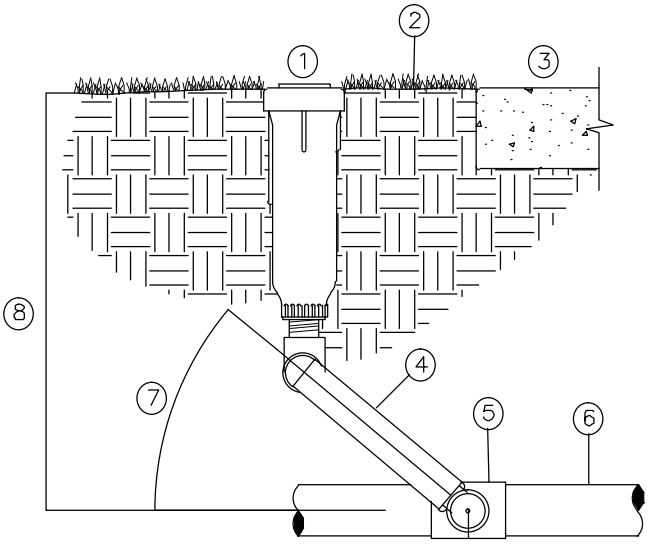

1. POP–UP ROTOR SPRINKLER – SEE LEGEND
2. TOP OF SPRINKLER WILL BE FLUSH WITH GRADE
3. NOTE: ALL SPRAY HEADS TO BE PLACED 2" CLEAR OF ALL HARDSCAPE SURFACES
4. LASCO UNITIZED SWING JOINT OR SPEARS SWING JOINT RISER ASSEMBLY; 12" MIN. LENGTH; SIZE AS REQUIRED
5. PVC SCH 40 SxSxT TEE OR (ELL)
6. PVC LATERAL LINE, SIZE AS NOTED ON PLAN
7. SWING JOINT ARM INSTALLED AT ANGLE BETWEEN 30 AND 45 DEG. OF LATERAL PIPE
8. DEPTH – SEE NOTES & TRENCH DETAIL

POP□UP GEAR DRIVE ROTOR SPRIN□LER

SCALE: NOT TO SCALE

STATEMENT OF USE

THIS DOCUMENT AND ANY ILLUSTRATIONS HEREON ARE PROVIDED AS STANDARD CONSTRUCTION DETAILS WITHIN SYRACUSE CITY. DEVIATION FROM THIS DOCUMENT REQUIRES APPROVAL OF SYRACUSE CITY. SYRACUSE CITY CORPORATION CAN NOT BE HELD LIABLE FOR MISUSE OR CHANGES REGARDING THIS DOCUMENT.

NO.	REVISION DESCRIPTION	BY	APR.	DATE

CAD FILE: SYRACUSE LANDSCAPE STDS
DRAWN BY: JDM/ELC
DESIGN BY: NQS
CHECKED BY: RCW
LAST UPDATED: 11/3/2011
DATE ADOPTED: XX/XX/XX

SYRACUSE EST. CITY 1935

DEVELOPMENT STANDARDS
SYRACUSE CITY CORPORATION

POP-UP GEAR DRIVE ROTOR SPRINKLER DETAIL

SHEET L14

Plot Date: 11/3/2011 10:32 PM Plotted By: Kurt S Fredericks
File Path: I:\STANDARDS\L-U-B LANDSCAPE CITY STANDARDS\SYRACUSE\SYRACUSE LANDSCAPE ST-S.DWG

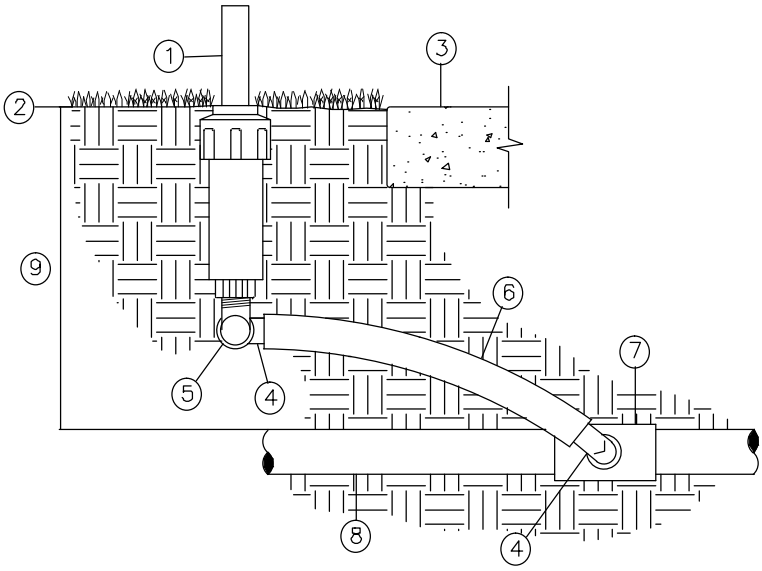

1. POP–UP SPRAY HEAD – SEE IRRIGATION EQUIPMENT SCHEDULE
2. TOP OF SPRINKLER WILL BE FLUSH WITH GRADE
3. NOTE: ALL SPRAY HEADS TO BE PLACED 2" CLEAR OF ALL HARDSCAPE SURFACES
4. SWING PIPE ELL WITH SPIRAL BARB FITTING (TYP.)
5. MARLEX STREET ELL
6. FLEXIBLE SWING PIPE, 12" MIN., 36" MAX. LENGTH
7. PVC SCH 40 SxSxT TEE (OR ELL)
8. PVC LATERAL LINE, SIZE AS NOTED ON PLAN
9. DEPTH – SEE TRENCH DETAIL & SPECIFICATIONS

POP□UP SPRAY □ROTARY SPRIN□LER

SCALE: NOT TO SCALE

STATEMENT OF USE
THIS DOCUMENT AND ANY ILLUSTRATIONS HEREON ARE PROVIDED AS STANDARD CONSTRUCTION DETAILS WITHIN SYRACUSE CITY. DEVIATION FROM THIS DOCUMENT REQUIRES APPROVAL OF SYRACUSE CITY. SYRACUSE CITY CORPORATION CAN NOT BE HELD LIABLE FOR MISUSE OR CHANGES REGARDING THIS DOCUMENT.

NO.	REVISION DESCRIPTION	BY	APR.	DATE

CAD FILE: SYRACUSE LANDSCAPE STDS
DRAWN BY: JDM/ELC
DESIGN BY: NQS
CHECKED BY: RCW
LAST UPDATED: 11/3/2011
DATE ADOPTED: XX/XX/XX

SYRACUSE EST. CITY 1935

DEVELOPMENT STANDARDS
SYRACUSE CITY CORPORATION

POP-UP SPRAY OR ROTARY SPRINKLER DETAIL

SHEET L15

Plot Date: 11/3/2011 10:32 AM Plotted By: Kurt S Fredericks
File Path: F:\STANDARDS\L-11-B LANDSCAPE CITY STANDARDS SYRACUSE\SYRACUSE LANDSCAPE ST-3.DWG

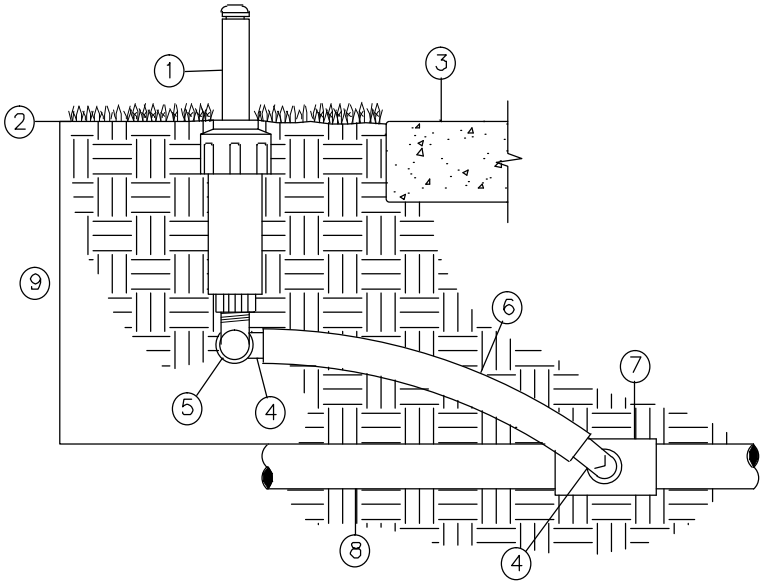

1. POP-UP BUBBLER HEAD – SEE IRRIGATION EQUIPMENT SCHEDULE
2. TOP OF SPRINKLER WILL BE FLUSH WITH GRADE
3. NOTE: ALL BUBBLER HEADS TO BE PLACED 2" CLEAR OF ALL HARDSCAPE SURFACES
4. SWING PIPE ELL WITH SPIRAL BARB FITTING (TYP.)
5. MARLEX STREET ELL
6. FLEXIBLE SWING PIPE, 12" MIN. LENGTH
7. PVC SCH 40 SxSxT TEE (OR ELL)
8. PVC LATERAL LINE, SIZE AS NOTED ON PLAN
9. DEPTH – SEE TRENCH DETAIL & SPECIFICATIONS

POP-UP MULTI-STREAM BUBBLER SPRINKLER

SCALE: NOT TO SCALE

STATEMENT OF USE

THIS DOCUMENT AND ANY ILLUSTRATIONS HEREON ARE PROVIDED AS STANDARD CONSTRUCTION DETAILS WITHIN SYRACUSE CITY. DEVIATION FROM THIS DOCUMENT REQUIRES APPROVAL OF SYRACUSE CITY. SYRACUSE CITY CORPORATION CAN NOT BE HELD LIABLE FOR MISUSE OR CHANGES REGARDING THIS DOCUMENT.

NO.	REVISION DESCRIPTION	BY	APR.	DATE

CAD FILE: SYRACUSE LANDSCAPE STDS
DRAWN BY: JDM/ELC
DESIGN BY: NQS
CHECKED BY: RCW
LAST UPDATED: 11/3/2011
DATE ADOPTED: XX/XX/XX

SYRACUSE EST. CITY 1935

DEVELOPMENT STANDARDS
SYRACUSE CITY CORPORATION

POP-UP MULTI-STREAM BUBBLER SPRINKLER DETAIL

SHEET L16

Plot Date 11/3/2011 10:32 AM Plotted By: Kurt S Fredericks
File Path: F:\STANDARDS\L-U-B LANDSCAPE CITY STANDARDS SYRACUSE SYTACLE LANDSCAPE ST-3.DWG

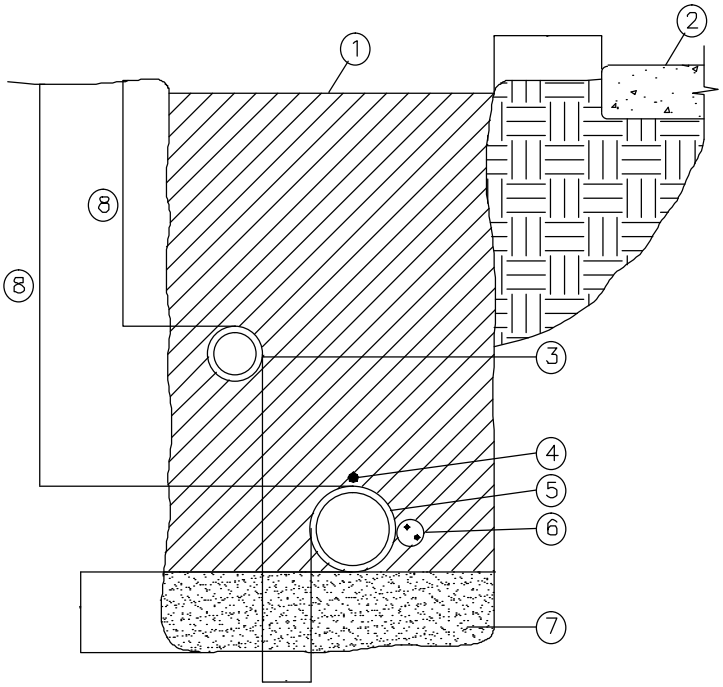

1. BACKFILL MATERIAL – SEE NOTES, COMPACT TO 90% MIN.
2. ADJACENT HARD SURFACE
3. NON–PRESSURE LATERAL LINE
4. MAIN LINE LOCATOR WIRE. BURIED WITH ALL MAINLINES
5. PRESSURE MAIN LINE
6. DIRECT BURIAL, LOW VOLTAGE CONTROL WIRES; TO BE BURIED AND TAPED AT 10' INCREMENTS. LOCATE DIRECTLY ADJACENT TO MAIN LINE
7. BEDDING MATERIAL – SEE NOTES
8. PIPE DEPTHS – SEE NOTES

NOTE:
SEE SLEEVING DETAIL FOR TRENCHING IN PAVED AREAS.

TRENCH DETAIL

SCALE: NOT TO SCALE

STATEMENT OF USE
THIS DOCUMENT AND ANY ILLUSTRATIONS HEREON ARE PROVIDED AS STANDARD CONSTRUCTION DETAILS WITHIN SYRACUSE CITY. DEVIATION FROM THIS DOCUMENT REQUIRES APPROVAL OF SYRACUSE CITY. SYRACUSE CITY CORPORATION CAN NOT BE HELD LIABLE FOR MISUSE OR CHANGES REGARDING THIS DOCUMENT.

NO.	REVISION DESCRIPTION	BY	APR.	DATE

CAD FILE: SYRACUSE LANDSCAPE STDS
DRAWN BY: JDM/ELC
DESIGN BY: NQS
CHECKED BY: RCW
LAST UPDATED: 11/3/2011
DATE ADOPTED: XX/XX/XX

SYRACUSE EST. CITY 1935

DEVELOPMENT STANDARDS
SYRACUSE CITY CORPORATION

TRENCH DETAIL

SHEET
L17

Plot Date: 1/5/2011 10:02 AM Plotted By: Kurt S Fredericks
File Path: C:\STANDARDS\L-11-B LANDSCAPE CITY STANDARDS SYRACUSE\SYRACUSE LANDSCAPE STDS.DWG

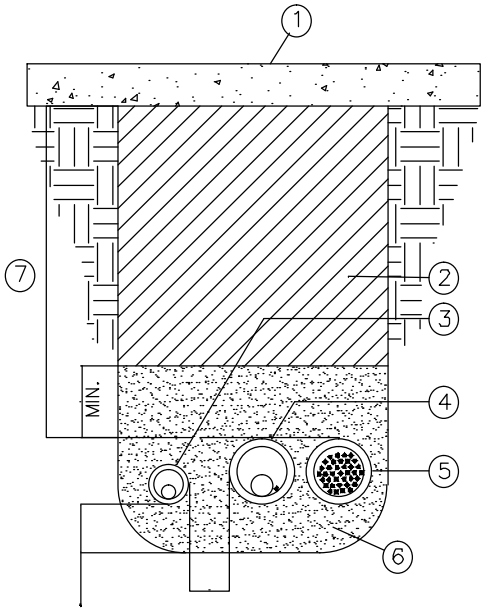

1. HARDSCAPE SURFACE – SEE PLANS
2. BACKFILL MATERIAL – SEE NOTES
3. LATERAL LINE WITH SLEEVE
4. PRESSURE MAIN LINE AND LOCATOR WIRE WITH SLEEVE
5. CONTROL WIRE SLEEVE (SEE PLANS FOR SIZE)
6. BEDDING MATERIAL – SEE NOTES
7. MINIMUM COVER:
   12" UNDER WALKS
   18" UNDER STREETS

NOTES:

1) SLEEVES 4" AND SMALLER USE PVC SCH. 40 PIPE.

2) SLEEVES >4" USE PVC CLASS 200 PIPE.

3) ALL SLEEVES SHALL BE TWO (2) TIMES LARGER THAN DIAMETER OF PIPE TO BE SLEEVED, UNLESS NOTED OTHERWISE ON THE PLANS.

4) INSTALL SLEEVES AT A DEPTH SUFFICIENT TO AVOID CONFLICT WITH OTHER UTILITIES AND MAINS.

SLEEVE DETAIL

SCALE: NOT TO SCALE

STATEMENT OF USE

THIS DOCUMENT AND ANY ILLUSTRATIONS HEREON ARE PROVIDED AS STANDARD CONSTRUCTION DETAILS WITHIN SYRACUSE CITY. DEVIATION FROM THIS DOCUMENT REQUIRES APPROVAL OF SYRACUSE CITY. SYRACUSE CITY CORPORATION CAN NOT BE HELD LIABLE FOR MISUSE OR CHANGES REGARDING THIS DOCUMENT.

NO.	REVISION DESCRIPTION	BY	APR.	DATE

CAD FILE: SYRACUSE LANDSCAPE STDS
DRAWN BY: JDM/ELC
DESIGN BY: NQS
CHECKED BY: RCW
LAST UPDATED: 11/3/2011
DATE ADOPTED: XX/XX/XX

SYRACUSE EST. CITY 1935

DEVELOPMENT STANDARDS
SYRACUSE CITY CORPORATION

SLEEVE DETAIL

SHEET L18

Plot Date: 11/3/2011 10:32 AM Plotted By: Kurt S Fredericks
File Path: F:\STANDARDS\-JUB LANDSCAPE CITY STANDARDS SYRACUSE\SYRACUSE LANDSCAPE STDS.DWG

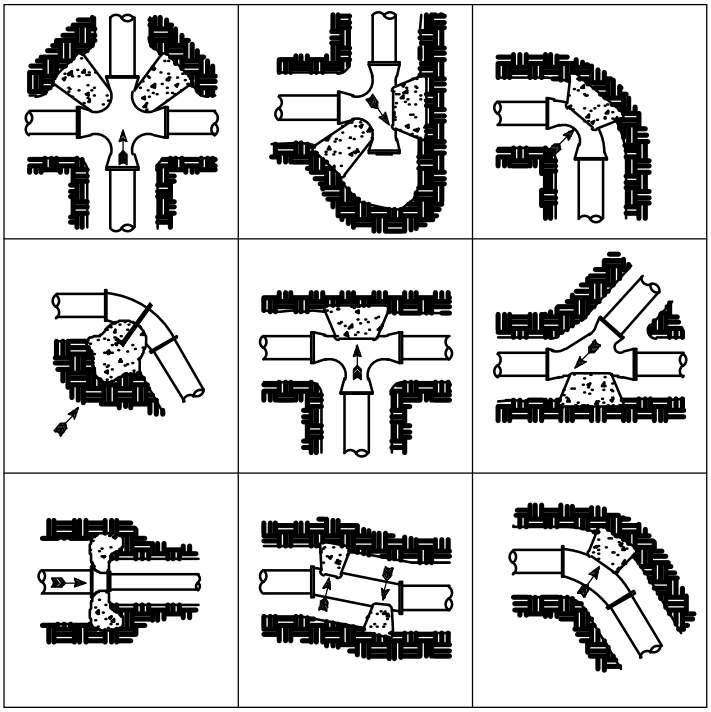

DIRECTION OF THRUST (TYP.) INSTALL THRUST BLOCKS ON ALL 3" AND LARGER FITTINGS AND VALVES.

TABLE NOTES:

1. IN USING THE TABLE BELOW, USE THE MAXIMUM INTERNAL PRESSURE ANTICIPATED (I.E. HYDROSTATIC TEST PRESSURE, POSSIBLE SURGE PRESSURE DUE TO PUMP SHUTOFF, ETC.). UNLESS DIRECTED OTHERWISE, ASSUME A WATER PRESSURE OF 200 PSI FOR YOUR CALCULATIONS.
2. SEE SOILS REPORT FOR BEARING STRENGTH OF SOIL. IN THE ABSENCE OF A SOILS REPORT, AN AVERAGE SOIL (SPADABLE MEDIUM CLAY) CAN BE ASSUMED TO HAVE A BEARING STRENGTH OF 2000 P.S.F.

SIDE THRUST PER 1 PSI				
PIPE SIZE	DEAD END OR TEE	90° ELBOW	45° ELBOW	22 ½° ELBOW
4	19	27	15	7
6	39	55	30	15
8	67	94	51	26
10	109	154	84	43
12	155	218	119	61

THRUST BLOC□ DETAIL

SCALE: NOT TO SCALE

STATEMENT OF USE

THIS DOCUMENT AND ANY ILLUSTRATIONS HEREON ARE PROVIDED AS STANDARD CONSTRUCTION DETAILS WITHIN SYRACUSE CITY. DEVIATION FROM THIS DOCUMENT REQUIRES APPROVAL OF SYRACUSE CITY. SYRACUSE CITY CORPORATION CAN NOT BE HELD LIABLE FOR MISUSE OR CHANGES REGARDING THIS DOCUMENT.

NO.	REVISION DESCRIPTION	BY	APR.	DATE

CAD FILE: SYRACUSE LANDSCAPE STDS
DRAWN BY: JDM/ELC
DESIGN BY: NQS
CHECKED BY: RCW
LAST UPDATED: 11/3/2011
DATE ADOPTED: XX/XX/XX

SYRACUSE EST. CITY 1935

DEVELOPMENT STANDARDS
SYRACUSE CITY CORPORATION

THRUST BLOCK DETAIL

SHEET L19

Plot Date 11/3/11 10:04 PM Plotted By: Kurt Fredericks
File Path: F:\STANDARDS\-JUB LANDSCAPE CITY STANDARDS SYRACUSE\SYRACUSE LANDSCAPE STDS.DWG

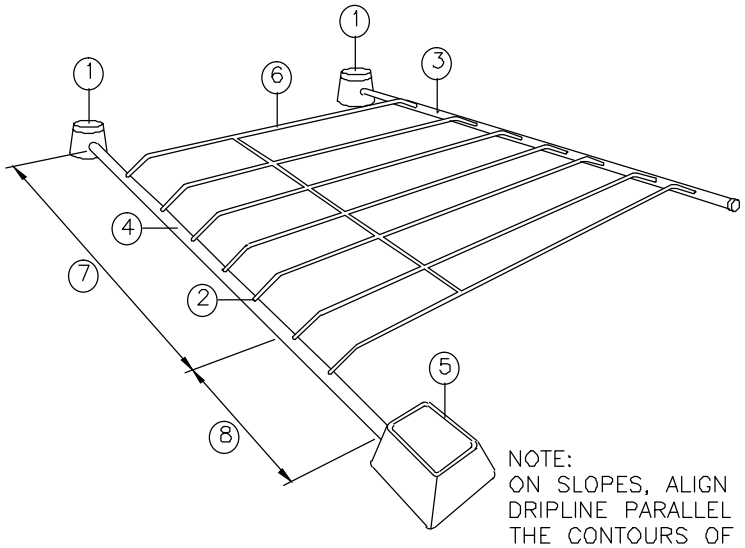

NOTE:
ON SLOPES, ALIGN DRIPLINE PARALLEL TO THE CONTOURS OF THE SLOPE.

1. MANUAL FLUSH VALVE PLUMBED TO PVC IN LOWEST POINT
2. TLIAPVC CONNECTOR
3. 1½" PVC EXHAUST HEADER (SEE NOTES FOR DEPTH)
4. 1½" PVC SUPPLY HEADER (SEE NOTES FOR DEPTH)
5. REMOTE CONTROL VALVE ASSEMBLY
6. DRIPLINE TUBING LATERAL – INSTALL AT GRADE UNDER MULCH AND ON TOP OF FABRIC (IF FABRIC IS USED)
7. ON SLOPES, USE THE SPECIFIED DRIPLINE SPACING ON THE TOP ⅔ OF THE SLOPE
8. ON SLOPES, USE THE SPECIFIED DRIPLINE SPACING PLUS 25% ON THE BOTTOM ⅓ OF SLOPE

DRIPLINE CIRCUIT LAYOUT

SCALE: NOT TO SCALE

STATEMENT OF USE
THIS DOCUMENT AND ANY ILLUSTRATIONS HEREON ARE PROVIDED AS STANDARD CONSTRUCTION DETAILS WITHIN SYRACUSE CITY. DEVIATION FROM THIS DOCUMENT REQUIRES APPROVAL OF SYRACUSE CITY. SYRACUSE CITY CORPORATION CAN NOT BE HELD LIABLE FOR MISUSE OR CHANGES REGARDING THIS DOCUMENT.

NO.	REVISION DESCRIPTION	BY	APR.	DATE

CAD FILE: SYRACUSE LANDSCAPE STDS
DRAWN BY: JDM/ELC
DESIGN BY: NQS
CHECKED BY: RCW
LAST UPDATED: 11/3/2011
DATE ADOPTED: XX/XX/XX

SYRACUSE EST. CITY 1935

DEVELOPMENT STANDARDS
SYRACUSE CITY CORPORATION

DRIPLINE CIRCUIT LAYOUT

SHEET
L20

Plot Date: 1/5/2011 10:04 PM Plotted By: Kurt S Fredericks
File Path: F:\STANDARDS\-JUB LANDSCAPE CITY STANDARDS SYRACUSE\SYRACUSE LANDSCAPE STDS.DWG

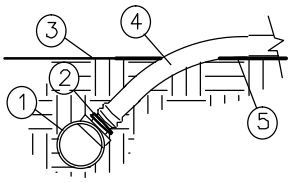

SECTION VIEW

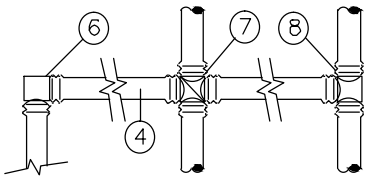

PLAN VIEW

1. 1 1/2" PVC HEADER
2. TLIAPVC CONNECTION
3. PLANTING BED FINISHED GRADE
4. DRIPLINE/BLANK TUBING
5. WEED BARRIER FABRIC (IF USED)
6. ELBOW
7. CROSS
8. TEE

DRIPLINE CONNECTIONS

SCALE: NOT TO SCALE

STATEMENT OF USE

THIS DOCUMENT AND ANY ILLUSTRATIONS HEREON ARE PROVIDED AS STANDARD CONSTRUCTION DETAILS WITHIN SYRACUSE CITY. DEVIATION FROM THIS DOCUMENT REQUIRES APPROVAL OF SYRACUSE CITY. SYRACUSE CITY CORPORATION CAN NOT BE HELD LIABLE FOR MISUSE OR CHANGES REGARDING THIS DOCUMENT.

NO.	REVISION DESCRIPTION	BY	APR.	DATE

CAD FILE: SYRACUSE LANDSCAPE STDS
DRAWN BY: JDM/ELC
DESIGN BY: NQS
CHECKED BY: RCW
LAST UPDATED: 11/3/2011
DATE ADOPTED: XX/XX/XX

SYRACUSE EST. CITY 1935

DEVELOPMENT STANDARDS
SYRACUSE CITY CORPORATION

DRIPLINE CONNECTIONS

SHEET
L21

Plot Date: 11/3/11 10:04 PM Plotted By: Kurt Fredericks
File Path: F:\STANDARDS\-JOB LANDSCAPE CITY STANDARDS SYRACUSE\SYRACUSE LANDSCAPE STDS.DWG

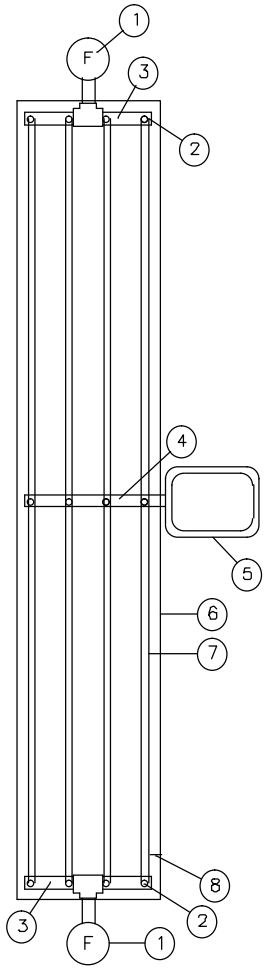

CENTER FEED LAYOUT

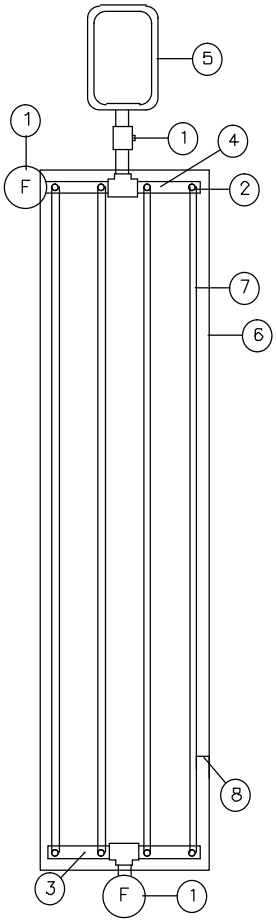

END FEED LAYOUT

1. MANUAL FLUSH VALVE PLUMBED TO PVC IN LOWEST POINT
2. TLIAPVC CONNECTOR
3. 1½" PVC EXHAUST HEADER
4. 1½" PVC SUPPLY HEADER
5. REMOTE CONTROL VALVE ASSEMBLY
6. AREA PERIMETER
7. DRIPLINE TUBING LATERAL
8. PERIMETER DRIPLINE TUBING LATERALS 2" TO 4" FROM EDGE
9. DRIPLINE TEE

INLINE DRIP LAYOUTS

SCALE: NOT TO SCALE

STATEMENT OF USE
THIS DOCUMENT AND ANY ILLUSTRATIONS HEREON ARE PROVIDED AS STANDARD CONSTRUCTION DETAILS WITHIN SYRACUSE CITY. DEVIATION FROM THIS DOCUMENT REQUIRES APPROVAL OF SYRACUSE CITY. SYRACUSE CITY CORPORATION CAN NOT BE HELD LIABLE FOR MISUSE OR CHANGES REGARDING THIS DOCUMENT.

NO.	REVISION DESCRIPTION	BY	APR.	DATE

CAD FILE: SYRACUSE LANDSCAPE STDS
DRAWN BY: JDM/ELC
DESIGN BY: NQS
CHECKED BY: RCW
LAST UPDATED: 11/3/2011
DATE ADOPTED: XX/XX/XX

SYRACUSE EST. CITY 1935

DEVELOPMENT STANDARDS
SYRACUSE CITY CORPORATION

INLINE DRIP LAYOUTS

SHEET
L22

Plot Date 11/3/2011 10:06 PM Plotted By: Kurt S Fredericks
File Path: C:\STANDARDS\L-11-B LANDSCAPE CITY STANDARDS SYRACUSE SYRACUSE LANDSCAPE STDS.DWG

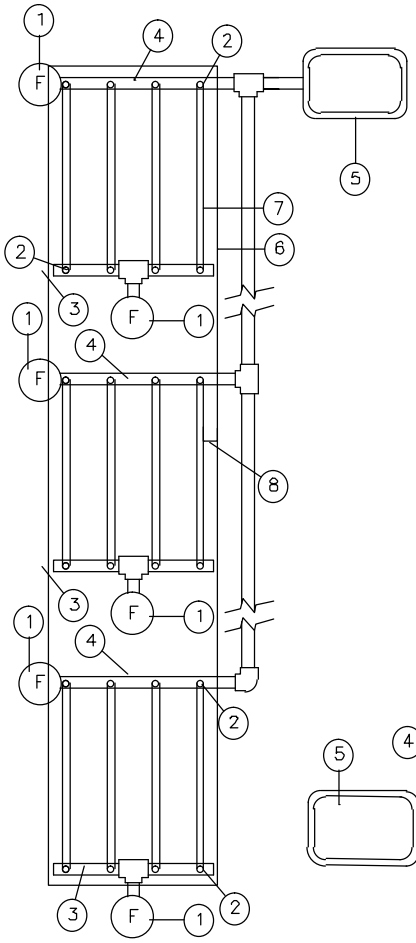

ISLAND LAYOUT

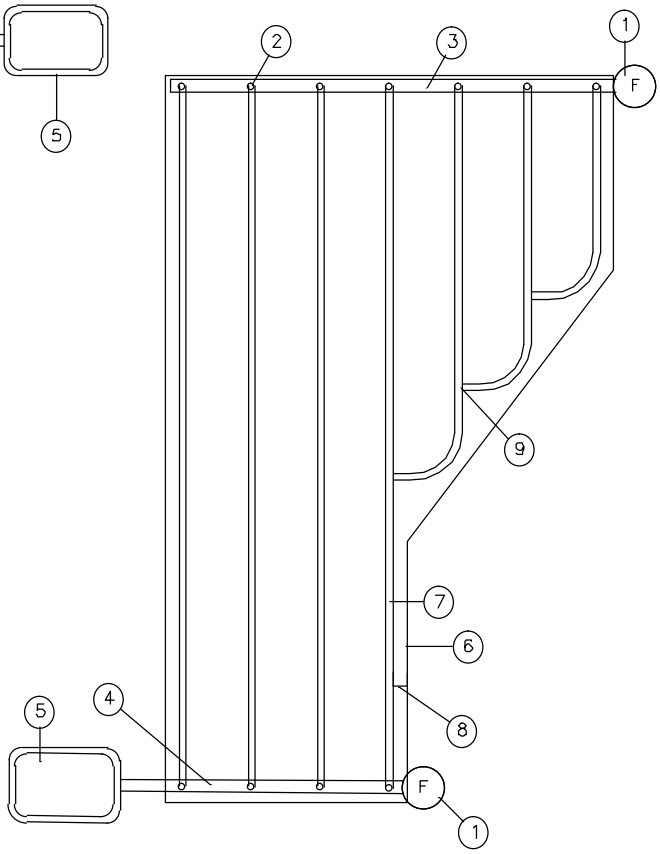

IRREGULAR LAYOUT

1. MANUAL FLUSH VALVE PLUMBED TO PVC IN LOWEST POINT
2. TLIAPVC CONNECTOR
3. 1½" PVC EXHAUST HEADER
4. 1½" PVC SUPPLY HEADER
5. REMOTE CONTROL VALVE ASSEMBLY
6. AREA PERIMETER
7. DRIPLINE TUBING LATERAL
8. PERIMETER DRIPLINE TUBING LATERALS 2" TO 4" FROM EDGE
9. DRIPLINE TEE

INLINE DRIP LAYOUTS

SCALE: NOT TO SCALE

STATEMENT OF USE

THIS DOCUMENT AND ANY ILLUSTRATIONS HEREON ARE PROVIDED AS STANDARD CONSTRUCTION DETAILS WITHIN SYRACUSE CITY. DEVIATION FROM THIS DOCUMENT REQUIRES APPROVAL OF SYRACUSE CITY. SYRACUSE CITY CORPORATION CAN NOT BE HELD LIABLE FOR MISUSE OR CHANGES REGARDING THIS DOCUMENT.

NO.	REVISION DESCRIPTION	BY	APR.	DATE

CAD FILE: SYRACUSE LANDSCAPE STDS
DRAWN BY: JDM/ELC
DESIGN BY: NQS
CHECKED BY: RCW
LAST UPDATED: 11/3/2011
DATE ADOPTED: XX/XX/XX

SYRACUSE EST. CITY 1935

DEVELOPMENT STANDARDS
SYRACUSE CITY CORPORATION

INLINE DRIP LAYOUTS

SHEET L23

Plot Date: 11/3/2011 10:06 PM Plotted By: Kurt S Fredericks
File Path: C:\STANDARDS\L-JUB LANDSCAPE CITY STANDARDS SYRACUSE\SYRACUSE LANDSCAPE STDS.DWG

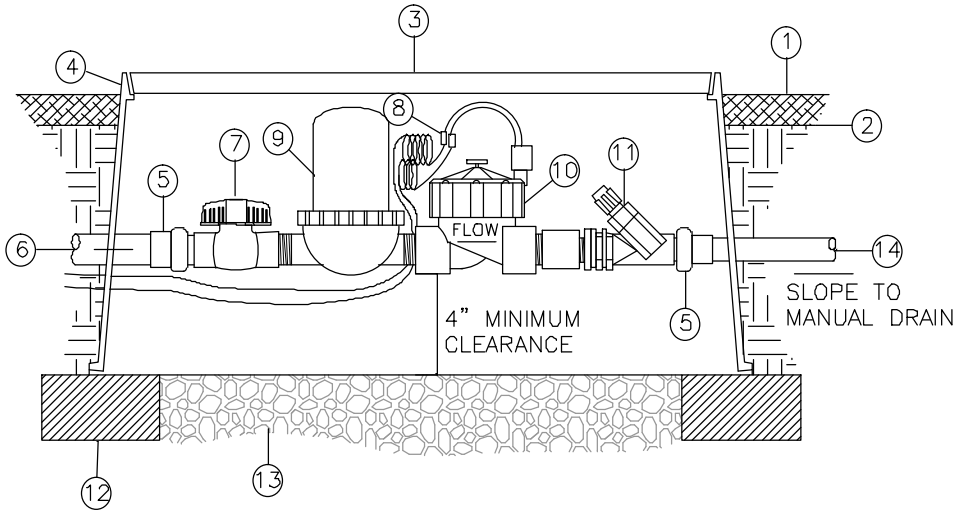

1. PLANTING BED MULCH, SEE PLANTING NOTES FOR DEPTH
2. FINISH GRADE
3. CARSON 1220 18" JUMBO SERIES VALVE BOX OR APPROVED EQUAL
4. 1" MAX. DEPTH
5. ACTION UNION – PART 18010–XX
   PART 18011–XX
   PART 18012–XX
6. FLOW FROM MAIN LINE
7. PLASTIC PVC BALL VALVE
8. 3M DBR/Y WATER TIGHT CONNECTORS
9. INLINE 1" FILTER
10. REMOTE CONTOL VALVE – SEE IRRIGATION EQUIPMENT SCHEDULE
11. INLINE PRESSURE REGULATOR
12. CONCRETE PAVERS ONLY
13. 4" MIN. DEPTH WASHED PEA GRAVEL
14. PVC SUPPLY HEADER

DRIP ONE REMOTE CONTROL VALVE ASSEMBLY

SCALE: NOT TO SCALE

STATEMENT OF USE
THIS DOCUMENT AND ANY ILLUSTRATIONS HEREON ARE PROVIDED AS STANDARD CONSTRUCTION DETAILS WITHIN SYRACUSE CITY. DEVIATION FROM THIS DOCUMENT REQUIRES APPROVAL OF SYRACUSE CITY. SYRACUSE CITY CORPORATION CAN NOT BE HELD LIABLE FOR MISUSE OR CHANGES REGARDING THIS DOCUMENT.

NO.	REVISION DESCRIPTION	BY	APR.	DATE

CAD FILE: SYRACUSE LANDSCAPE STDS
DRAWN BY: JDM/ELC
DESIGN BY: NQS
CHECKED BY: RCW
LAST UPDATED: 11/3/2011
DATE ADOPTED: XX/XX/XX

SYRACUSE EST. CITY 1935

DEVELOPMENT STANDARDS
SYRACUSE CITY CORPORATION

DRIP ZONE REMOTE CONTROL VALVE ASSEMBLY DETAIL

SHEET
L24

Plot Date: 11/3/2011 10:06 AM Plotted By: Kurt S Fredericks
File Path: F:\STANDARDS\JOB LANDSCAPE CITY STANDARDS SYRACUSE\SYRACUSE LANDSCAPE STDS.DWG

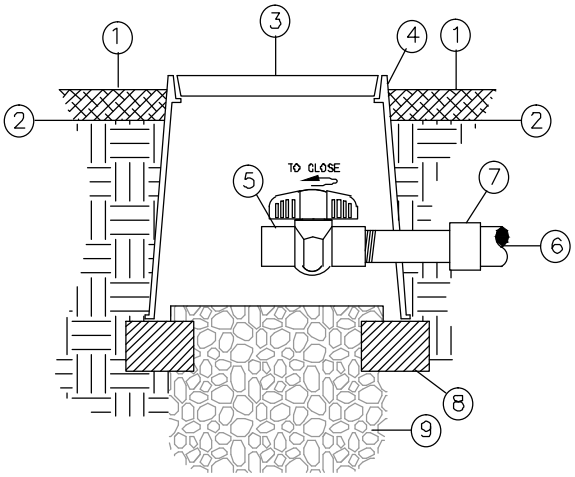

1. PLANTING BED MULCH, SEE PLANTING NOTES FOR DEPTH
2. FINISH GRADE
3. PLASTIC VALVE BOX CARSON 809 OR EQUAL FLUSH WITH GRADE
4. 1" MAX. DEPTH
5. BALL VALVE
6. PVC EXHAUST HEADER
7. PVC REDUCER ADAPER (S X 1/2") FPT (SIZE AS REQ'D)
8. CONCRETE PAVERS ONLY
9. 1 C.F. WASHED PEA GRAVEL

DRIP FLUSH VALVE PLUMBED TO PVC

SCALE: NOT TO SCALE

STATEMENT OF USE

THIS DOCUMENT AND ANY ILLUSTRATIONS HEREON ARE PROVIDED AS STANDARD CONSTRUCTION DETAILS WITHIN SYRACUSE CITY. DEVIATION FROM THIS DOCUMENT REQUIRES APPROVAL OF SYRACUSE CITY. SYRACUSE CITY CORPORATION CAN NOT BE HELD LIABLE FOR MISUSE OR CHANGES REGARDING THIS DOCUMENT.

NO.	REVISION DESCRIPTION	BY	APR.	DATE

CAD FILE: SYRACUSE LANDSCAPE STDS
DRAWN BY: JDM/ELC
DESIGN BY: NQS
CHECKED BY: RCW
LAST UPDATED: 11/3/2011
DATE ADOPTED: XX/XX/XX

SYRACUSE EST. CITY 1935

DEVELOPMENT STANDARDS
SYRACUSE CITY CORPORATION

DRIP FLUSH VALVE DETAIL

SHEET
L25

Plot Date: 11/3/11 10:05 AM Plotted By: Kurt Fredericks
File Path: F:\STANDARDS\-JUB LANDSCAPE CITY STANDARDS SYRACUSE\SYRACUSE LANDSCAPE ST-S.DWG

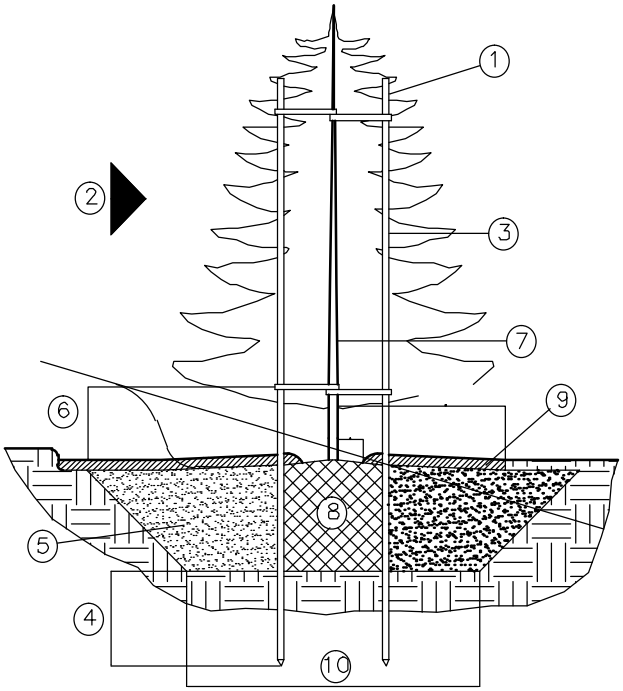

1. 2" DIA. OR 2"X2" SQ. x10' STRAIGHT WOODEN STAKE (2 REQUIRED)
2. PREVAILING WIND DIRECTION
3. V.I.T. CINCH–TIE VINYL TREE TIE (2 PER STAKE, LENGTH AS REQUIRED). SECURE TO STAKE W/ GALV. NAIL, 1 PER TIE
4. 24" MIN.
5. SEE TREE/SHRUB PLANTING DETAIL
6. 18" MAX.
7. TREE TRUNK
8. ROOTBALL
9. 3" LAYER SHREDDED BARK MULCH AROUND EACH TREE IN 3' RADIUS CIRCLE (WHEN IN TURF)
10. 2x ROOTBALL DIA. MIN. W/ 45° SIDES

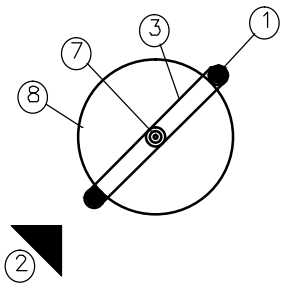

EVERGREEN TREE STA□ING

SCALE: NOT TO SCALE

STATEMENT OF USE

THIS DOCUMENT AND ANY ILLUSTRATIONS HEREON ARE PROVIDED AS STANDARD CONSTRUCTION DETAILS WITHIN SYRACUSE CITY. DEVIATION FROM THIS DOCUMENT REQUIRES APPROVAL OF SYRACUSE CITY. SYRACUSE CITY CORPORATION CAN NOT BE HELD LIABLE FOR MISUSE OR CHANGES REGARDING THIS DOCUMENT.

NO.	REVISION DESCRIPTION	BY	APR.	DATE

CAD FILE: SYRACUSE LANDSCAPE STDS
DRAWN BY: JDM/ELC
DESIGN BY: NQS
CHECKED BY: RCW
LAST UPDATED: 11/3/2011
DATE ADOPTED: XX/XX/XX

SYRACUSE EST. CITY 1935

DEVELOPMENT STANDARDS
SYRACUSE CITY CORPORATION

EVERGREEN TREE STAKING DETAIL

SHEET L26

Plot Date: 11/3/11 6:01 PM Plotted By: Kurt Fredericks
File Path: C:\STANDARDS\L-11-B LANDSCAPE CITY STANDARDS SYRACUSE\SYRACUSE LANDSCAPE STDS.DWG

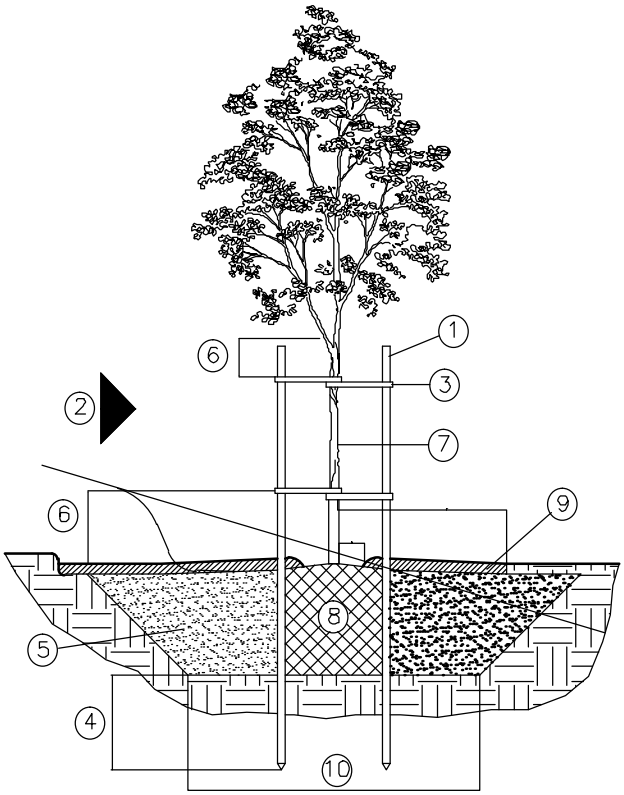

1. 2" DIA. OR 2"X2" SQ. x10' STRAIGHT WOODEN STAKE (2 REQUIRED)
2. PREVAILING WIND DIRECTION
3. V.I.T. CINCH–TIE VINYL TREE TIE (2 PER STAKE, LENGTH AS REQUIRED). SECURE TO STAKE W/ GALV. NAIL, 1 PER TIE
4. 24" MIN.
5. SEE TREE/SHRUB PLANTING DETAIL
6. 6" MAX.
7. TREE TRUNK
8. ROOTBALL
9. 3" LAYER SHREDDED BARK MULCH AROUND EACH TREE (3' RADIUS CIRCLE WHEN IN TURF)
10. 2x ROOTBALL DIA. MIN. W/ 45° SIDES

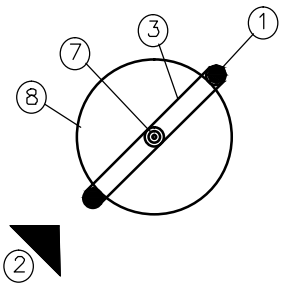

DECIDUOUS TREE STA□ING

SCALE: NOT TO SCALE

STATEMENT OF USE

THIS DOCUMENT AND ANY ILLUSTRATIONS HEREON ARE PROVIDED AS STANDARD CONSTRUCTION DETAILS WITHIN SYRACUSE CITY. DEVIATION FROM THIS DOCUMENT REQUIRES APPROVAL OF SYRACUSE CITY. SYRACUSE CITY CORPORATION CAN NOT BE HELD LIABLE FOR MISUSE OR CHANGES REGARDING THIS DOCUMENT.

NO.	REVISION DESCRIPTION	BY	APR.	DATE

CAD FILE: SYRACUSE LANDSCAPE STDS
DRAWN BY: JDM/ELC
DESIGN BY: NQS
CHECKED BY: RCW
LAST UPDATED: 11/3/2011
DATE ADOPTED: XX/XX/XX

SYRACUSE EST. CITY 1935

DEVELOPMENT STANDARDS
SYRACUSE CITY CORPORATION

DECIDUOUS TREE STAKING DETAIL

SHEET L27

Plot Date: 1/5/2011 6:07 PM Plotted By: Kurt S Fredericks
File Path: F:\STANDARDS\-JUB LANDSCAPE CITY STANDARDS SYRACUSE\SYRACUSE LANDSCAPE STDS.DWG

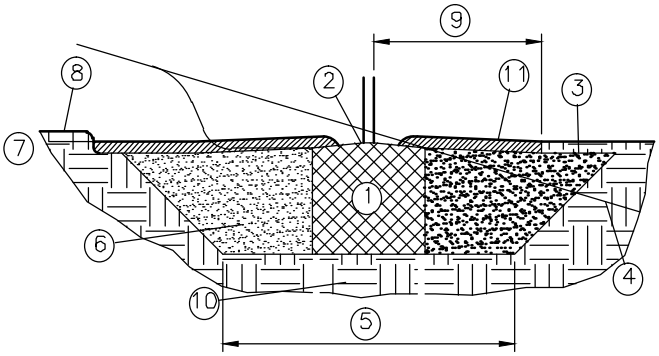

1. ROOTBALL
2. CROWN – AT OR UP TO 1" ABOVE FINISH GRADE
3. FINISH GRADE
4. FINISH GRADE AT SLOPE (WHERE OCCURS)
5. 2x ROOTBALL DIA. MIN. W/ 45° SIDES
6. BACKFILL MIX (SEE PLANTING NOTES)
7. 2"
8. TOP OF PAVING (WHERE APPLICABLE)
9. 3' RADIUS OF SHREDDED BARK MULCH WHEN TREE IS LOCATED IN TURF
10. UNDISTURBED SOIL
11. 3" LAYER SHREDDED BARK MULCH

TREE □SHRUB PLANTING

SCALE: NOT TO SCALE

STATEMENT OF USE

THIS DOCUMENT AND ANY ILLUSTRATIONS HEREON ARE PROVIDED AS STANDARD CONSTRUCTION DETAILS WITHIN SYRACUSE CITY. DEVIATION FROM THIS DOCUMENT REQUIRES APPROVAL OF SYRACUSE CITY. SYRACUSE CITY CORPORATION CAN NOT BE HELD LIABLE FOR MISUSE OR CHANGES REGARDING THIS DOCUMENT.

NO.	REVISION DESCRIPTION	BY	APR.	DATE

CAD FILE: SYRACUSE LANDSCAPE STDS
DRAWN BY: JDM/ELC
DESIGN BY: NQS
CHECKED BY: RCW
LAST UPDATED: 11/3/2011
DATE ADOPTED: XX/XX/XX

SYRACUSE EST. CITY 1935

DEVELOPMENT STANDARDS
SYRACUSE CITY CORPORATION

TREE AND SHRUB PLANING DETAIL

SHEET L28

Plot Date: 11/3/2011 6:01 PM Plotted By: Kurt S Fredericks
File Path: F:\STANDARDS\L-11-B LANDSCAPE CITY STANDARDS SYRACUSE\SYRACUSE LANDSCAPE STDS.DWG

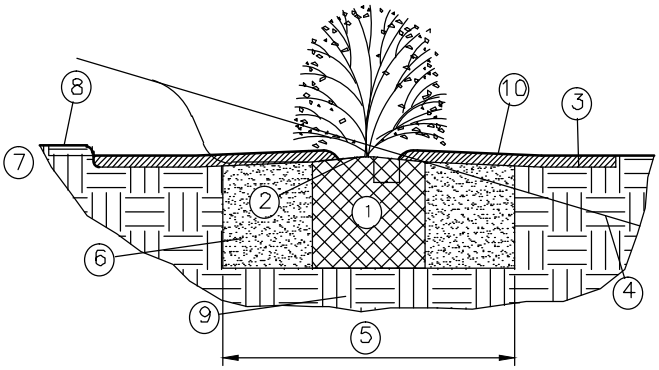

1. ROOTBALL
2. CROWN – AT FINISH GRADE
3. FINISH GRADE
4. FINISH GRADE AT SLOPE (WHERE OCCURS)
5. 2x ROOTBALL DIA. MIN.
6. BACKFILL MIX (SEE PLANTING NOTES)
7. 2"
8. TOP OF PAVING (WHERE APPLICABLE)
9. UNDISTURBED SOIL
10. 3" LAYER SHREDDED BARK MULCH

PERENNIAL PLANTING

SCALE: NOT TO SCALE

STATEMENT OF USE

THIS DOCUMENT AND ANY ILLUSTRATIONS HEREON ARE PROVIDED AS STANDARD CONSTRUCTION DETAILS WITHIN SYRACUSE CITY. DEVIATION FROM THIS DOCUMENT REQUIRES APPROVAL OF SYRACUSE CITY. SYRACUSE CITY CORPORATION CAN NOT BE HELD LIABLE FOR MISUSE OR CHANGES REGARDING THIS DOCUMENT.

NO.	REVISION DESCRIPTION	BY	APR.	DATE

CAD FILE: SYRACUSE LANDSCAPE STDS
DRAWN BY: JDM/ELC
DESIGN BY: NQS
CHECKED BY: RCW
LAST UPDATED: 11/3/2011
DATE ADOPTED: XX/XX/XX

SYRACUSE EST. CITY 1935

DEVELOPMENT STANDARDS
SYRACUSE CITY CORPORATION

PERENNIAL PLANTING DETAIL

SHEET L29

Plot Date: 11/3/11 10:06 PM Plotted By: Kurt Fredericks
File Path: F:\STANDARDS\-JOB LANDSCAPE CITY STANDARDS SYRACUSE\SYRACUSE LANDSCAPE STDS.DWG

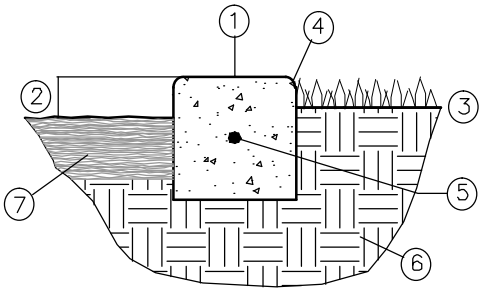

NOTE:
PROVIDE CONSTRUCTION OR CONTROL JOINTS AT 5' O.C. MAX. AND EXPANSION JOINTS WHERE MOWSTRIP ABUTS ANY MASONRY TYPE IMPROVEMENT.

1. 6" X 6" CONCRETE MOW STRIP (MIN. 2000 PSI AT 28 DAYS)
2. FINISH GRADE AT 2" FOR GROUNDCOVER AREAS
3. FINISH GRADE FOR LAWN AREAS: 1" FOR SEED; 1–1/2" FOR SOD
4. ½" RADIUS TROWELED EDGES (TYP.)
5. #3 REBAR CONT. (LAP 12" AT SPLICES)
6. UNDISTURBED OR 90% COMPACTED SUBGRADE
7. 3" LAYER SHREDDED BARK MULCH IN PLANTER BEDS

6" CONCRETE MOWSTRIP

SCALE: NOT TO SCALE

STATEMENT OF USE
THIS DOCUMENT AND ANY ILLUSTRATIONS HEREON ARE PROVIDED AS STANDARD CONSTRUCTION DETAILS WITHIN SYRACUSE CITY. DEVIATION FROM THIS DOCUMENT REQUIRES APPROVAL OF SYRACUSE CITY. SYRACUSE CITY CORPORATION CAN NOT BE HELD LIABLE FOR MISUSE OR CHANGES REGARDING THIS DOCUMENT.

NO.	REVISION DESCRIPTION	BY	APR.	DATE

CAD FILE: SYRACUSE LANDSCAPE STDS
DRAWN BY: JDM/ELC
DESIGN BY: NQS
CHECKED BY: RCW
LAST UPDATED: 11/3/2011
DATE ADOPTED: XX/XX/XX

SYRACUSE EST. CITY 1935

DEVELOPMENT STANDARDS
SYRACUSE CITY CORPORATION

6 INCH CONCRETE MOWSTRIP DETAIL

SHEET
L30

Plot Date: 1/5/2011 10:06 PM Plotted By: Kurt Fredericks
File Path: F:\STANDARDS\L-J-B LANDSCAPE CITY STANDARDS\SYRACUSE\SYRACUSE LANDSCAPE ST-3.DWG

Exhibit H

Interlocal Agreement

(to be attached later)

Exhibit I
Subdivision Plat and Offsite Improvement Agreement

NINIGRET NORTH I SUBDIVISION

An Industrial Subdivision Located in the Southeast Quarter of Section 3,
Township 4 North, Range 2 West, Salt Lake Base & Meridian
Syracuse City, Davis County, Utah

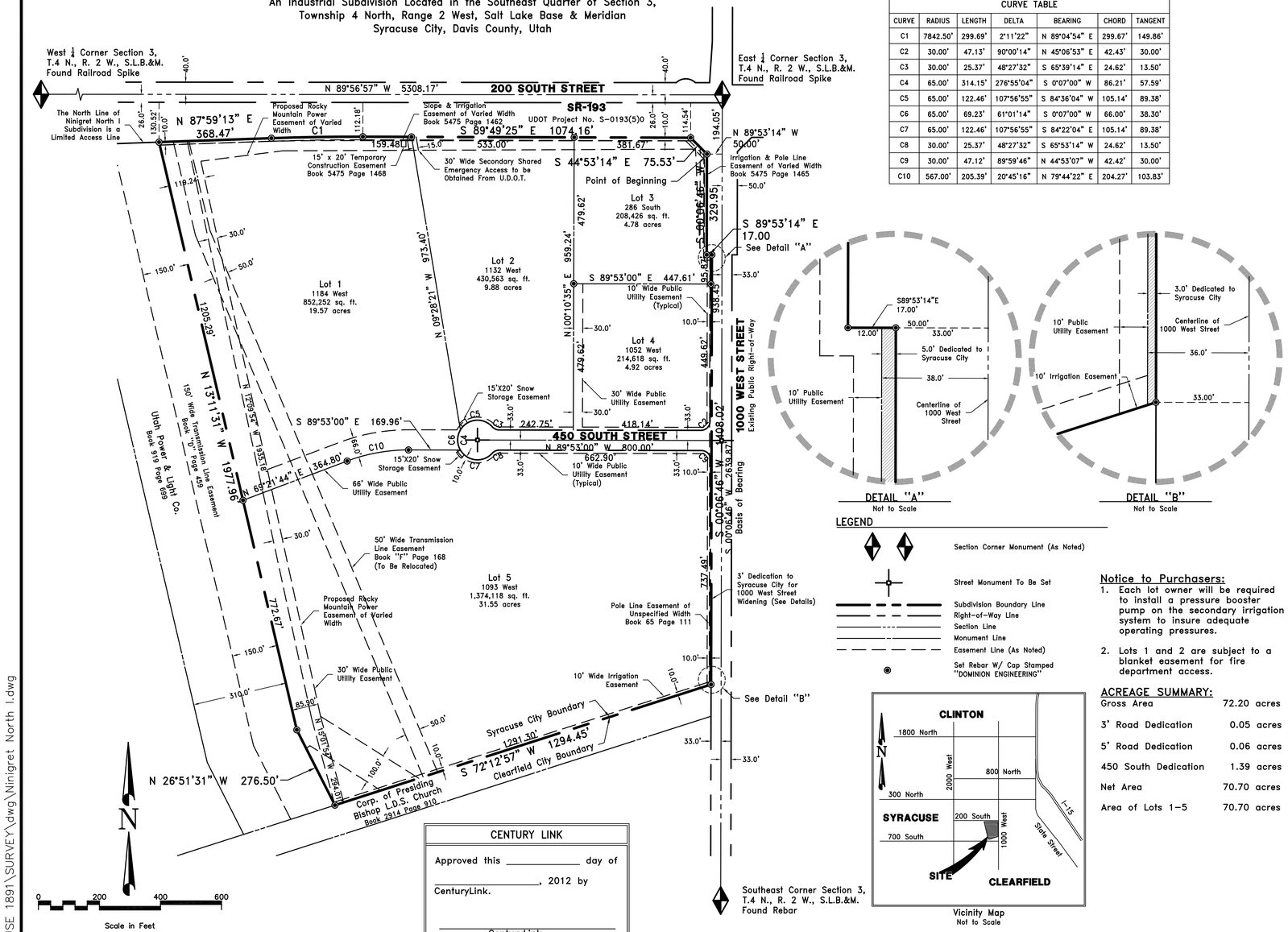

CURVE TABLE						
CURVE	RADIUS	LENGTH	DELTA	BEARING	CHORD	TANGENT
C1	7842.50'	299.69'	2°11'22"	N 89°04'54" E	299.67'	149.86'
C2	30.00'	47.13'	90°00'14"	N 45°06'53" E	42.43'	30.00'
C3	30.00'	25.37'	48°27'32"	S 65°39'14" E	24.62'	13.50'
C4	65.00'	314.15'	276°55'04"	S 0°07'00" W	86.21'	57.59'
C5	65.00'	122.46'	107°56'55"	S 84°36'04" W	105.14'	89.38'
C6	65.00'	69.23'	61°01'14"	S 0°07'00" W	66.00'	38.30'
C7	65.00'	122.46'	107°56'55"	S 84°22'04" E	105.14'	89.38'
C8	30.00'	25.37'	48°27'32"	S 65°53'14" W	24.62'	13.50'
C9	30.00'	47.12'	89°59'46"	N 44°53'07" W	42.42'	30.00'
C10	567.00'	205.39'	20°45'16"	N 79°44'22" E	204.27'	103.83'

DETAIL "A"
Not to Scale

DETAIL "B"
Not to Scale

LEGEND

- Section Corner Monument (As Noted)
- Street Monument To Be Set
- Subdivision Boundary Line
- Right-of-Way Line
- Section Line
- Monument Line
- Easement Line (As Noted)
- Set Rebar W/ Cap Stamped "DOMINION ENGINEERING"

Notice to Purchasers:

1. Each lot owner will be required to install a pressure booster pump on the secondary irrigation system to insure adequate operating pressures.
2. Lots 1 and 2 are subject to a blanket easement for fire department access.

ACREAGE SUMMARY:

Gross Area	72.20 acres
3' Road Dedication	0.05 acres
5' Road Dedication	0.06 acres
450 South Dedication	1.39 acres
Net Area	70.70 acres
Area of Lots 1–5	70.70 acres

Vicinity Map
Not to Scale

CENTURY LINK

Approved this _____ day of _____, 2012 by CenturyLink.

_____
CenturyLink

SURVEYOR'S CERTIFICATE

I, Mark N Gregory, do hereby certify that I am a Professional Land Surveyor in the State of Utah holding Certificate Number 334576 as prescribed by Title 58, Chapter 22 of the Professional Engineers and Land Surveyors Licensing Act. I further certify that by the authority of the owners, I have made an accurate survey of the tract of land shown and described hereon in accordance with Section 17-23-17 of the Utah State Code, have verified all measurements shown and have subdivided said property into lots and streets hereafter to be known as Ninigret North I Subdivision and that the same has been surveyed and monuments have been placed on the ground as represented on this plat , and that this plat of Ninigret North Subdivision in Syracuse City, Davis County, Utah, has been drawn correctly to the designated scale and is a true and correct representation of the herein described lands included in said subdivision, based upon data compiled from records in the Davis County Recorder's Office and from said survey made by me on the ground, I further certify that the requirements of all applicable statutes and ordinances of Syracuse City. Davis County, concerning zoning requirements regarding lot measurements have been complied with.

BOUNDARY DESCRIPTION

A parcel of land located in the Southeast Quarter of Section 3, Township 4 North, Range 2 West, Salt Lake Base and Meridian, Syracuse City, Davis County, Utah described as follows:

BEGINNING at a point on the west right-of-way line of 1000 West Street, said point being South 00°06'46" West 194.05 feet along the east line of Section 3, Township 4 North, Range 2 West, Salt Lake Base and Meridian and North 89°53'14" West 50.00 feet from the found railroad spike marking the East Quarter corner of said Section 3, and thence along said right-of-way line the following three (3) courses: 1) South 00°06'46" West 329.95 feet, 2) South 89°53'14" East 17.00 feet and 3) South 00°06'46" West 1408.02 feet to the north line of property described in that certain Correction Quit Claim Deed recorded October 29, 2001 as Entry No. 1699015 in Book 2914 at Page 910 of the Davis County records; thence along said north line South 72°12'57" West 1294.45 feet to a point on the east line of the property described in that certain Warranty Deed recorded November 03, 1982 as Entry No. 626040 in Book 919 at Page 699 of said records; thence along said line the following two (2) courses: 1) North 26°51'31" West 276.50 feet and 2) North 13°11'31" West 1977.96 feet to a point on the south right-of-way line of SR-193; thence along said right-of-way line the following four (4) courses: 1) North 87°59'13" East 368.47 feet to a point of point of tangency of a 7,842.50 foot radius curve to the right, 2) Easterly 299.69 feet along the arc of said curve through a central angle of 02°11'22" and a long chord of North 89°04'54" East 299.67 feet, 3) South 89°49'25"East 1074.16 feet and 4) South 44°53'14" East 75.53 feet to the POINT OF BEGINNING. Said parcel contains 3,145,401 square feet, or 72.20 acres, more or less.

Date _____

Mark N Gregory
P.L.S. No. 334576

PROFESSIONAL LAND SURVEYOR
LICENSE #334576
MARK N GREGORY
STATE OF UTAH

OWNERS DEDICATION AND CERTIFICATION

We the undersigned owners of the herein described tract of land, do hereby set apart and subdivide the same into privately owned property and public streets as shown on the plat and name said tract Ninigret North I Subdivision, and do hereby dedicate to public use all these parts or portions of said tract of land designated as streets, the same to be used as public thoroughfares and also to grant and dedicate a perpetual right-of-way and easement over, upon and under the lands designated hereon as public utility, storm water and storm drain easements, the same to be used for the installation maintenance and operation of public utility service line, storm drainage facilities, irrigation canals or for the perpetual preservation of water channels in their natural state whichever is applicable as may be authorized by the governing authority, with no buildings or structures being erected within such easements.

_____ _____
Corporation of the Presiding Bishop of the Church of Jesus Christ of Latter-Day Saints — Date

ACKNOWLEDGMENT

STATE OF UTAH
COUNTY OF _____ }:ss

On this _____ day of _____, 2012 personally appeared before me, _____ who being duly sworn, acknowledged to me that he/she is the _____ of Corporation of the Presiding Bishop of the Church of Jesus Christ of Latter-Day Saints, and that the foregoing instrument was signed on behalf of said Corporation and said _____ acknowledged to me that said Corporation executed the same.

WITNESS my hand and official seal.

Signature of Notary

My Commission Expires — Notary Seal

PREPARED BY:	QUESTAR	ROCKY MOUNTAIN POWER	SYRACUSE CITY PLANNING COMMISSION	SYRACUSE CITY ENGINEER	SYRACUSE CITY COUNCIL	DAVIS COUNTY RECORDER #_____
DOMINION Engineering Associates, L.C. 5684 South Green Street Murray, Utah 84123 801-713-3000	Approved this _____ day of _____, 2012 by Questar Gas. _____ Questar Gas	Approved this _____ day of _____, 2012 by Rocky Mountain Power. _____ Rocky Mountain Power	Approved this _____ day of _____, 2012 by the Syracuse City Planning Commission. _____ Chairman, Syracuse City Planning Commission	I hereby certify that this office has examined this plat and it is correct in accordance with information on file in this office. _____ Syracuse City Engineer Date	Presented to the Syracuse City Council this _____ day of _____, 2012 by the Syracuse City Planning Commission. Attest: _____ Syracuse City Mayor _____ City Recorder	State of Utah, County of Davis, recorded and filed at the request of _____ Date _____ Time _____ Book _____ Page _____ $ _____ Fees _____ Davis County Recorder

P:\NINIGRET - SYRACUSE 1891\SURVEY\dwg\Ninigret North I.dwg

SYRACUSE CITY

Syracuse City Special RDA Agenda
October 23, 2012 – Immediately following the Special Council Meeting, which begins at 6:00 p.m.
City Council Conference Room
Municipal Building, 1979 W. 1900 S.

1. Meeting called to order
2. Consideration of Joint Development Agreement between the Syracuse City RDA and Ninigret.
3. Adjourn

~~~~~

In compliance with the Americans Disabilities Act, persons needing auxiliary communicative aids and services for this meeting should contact the City Offices at 801-825-1477 at least 48 hours in advance of the meeting.

CERTIFICATE OF POSTING

The undersigned, duly appointed City Recorder, does hereby certify that the above notice and agenda was posted within the Syracuse City limits on this 19th day of October, 2012 at Syracuse City Hall on the City Hall Notice Board and at http://www.syracuseut.com/. A copy was also provided to the Standard-Examiner on October 19, 2012.

CASSIE Z. BROWN, CMC
SYRACUSE CITY RECORDER
~~~~~

RDA AGENDA

October 23, 2012

Agenda Item **#2** Consideration of Joint Development Agreement between Syracuse City RDA and Ninigret.

Factual Summation

- Please see the materials provided in the Council packet.
- Any questions regarding this item can be directed at City Attorney Will Carlson. Please note that exhibit B to the agreement will be provided by Ninigret and exhibits H and I do not yet exist as they are not to be drafted until a future date upon development of the site.