SYRACUSE CITY

Syracuse City Council Regular Meeting Agenda
February 11, 2014 – 7:00 p.m.
City Council Chambers
Municipal Building, 1979 W. 1900 S.

1. Meeting called to order
   Invocation or thought**
   Pledge of Allegiance
   Adopt agenda

2. Presentation of the Syracuse City and Wendy's "Award for Excellence" to Savannah Anderton and Mitchell Lindhardt.

3. Recognition
   a. Former Councilmember Larry Shingleton.
   b. Police Officers Stan Penrod and Lance Call for ice save at Jensen Park.

4. Proposed Resolution R14-03 recognizing Yupin Martin and Thai Jasmin as the recipient of the Winter 2014 Syracuse City "Friend of the Community" Business Award.

5. Approval of Minutes:
   a. Special Meeting of January 14, 2014
   b. Regular Meeting of January 14, 2014
   c. Work Session Meeting of January 28, 2014

6. Public Comment: This is an opportunity to address the Council regarding your concerns or ideas. Please limit your comments to three minutes.

7. Proposed Resolution 14-02 appointing City Councilmembers to various committee positions and assignments.

8. Proposed Resolution 14-04 appointing Councilmember Gailey to the Administrative Control Board of the Wasatch Integrated Waste Management District (WIWMD).

9. Proposed Resolution 14-06 appointing Councilmember Johnson to the Davis County Mosquito Abatement District (MAD) Board.

10. Proposed Resolution R14-05 appointing a member of the Governing Body to the Board of Trustees of the North Davis Sewer District (NDSD)

11. Proposed Resolution R14-07 appointing Judy Merrill to the Syracuse City Arts Council.

12. Proposed Resolution R14-08 designating and appointing certain appointed officers of Syracuse City.

13. Public Hearing – Proposed Resolution R14-09 amending the Syracuse City Consolidated Fee Schedule by making adjustments throughout.

14. Proposed Resolution R14-10 adopting updated Syracuse City Engineering Standards and Construction Specifications.

15. Proposed Resolution R14-11 affirming the Syracuse City Council's review of the Municipal Wastewater Planning Program self-assessment and acceptance for future reporting of the same.

16. Proposed Ordinance 14-02 amending the Syracuse City General Plan adopted in 1976, as amended.

17. Councilmember Reports

18. Mayor Report

19. City Manager Report

20. Adjourn

~~~~~

In compliance with the Americans Disabilities Act, persons needing auxiliary communicative aids and services for this meeting should contact the City Offices at 801-825-1477 at least 48 hours in advance of the meeting.

CERTIFICATE OF POSTING

The undersigned, duly appointed City Recorder, does hereby certify that the above notice and agenda was posted within the Syracuse City limits on this 6th day of February, 2014 at Syracuse City Hall on the City Hall Notice Board and at http://www.syracuseut.com/. A copy was also provided to the Standard-Examiner on February 6, 2014.

CASSIE Z. BROWN, CMC
SYRACUSE CITY RECORDER

**Members of the public who desire to offer a thought or invocation at Syracuse City Council Meetings shall contact the City Administrator at least two (2) weeks in advance of the meeting. Request will be honored on a first come, first serve basis. In the event there are no requests to offer a comment or prayer, the Mayor may seek opening comment or prayer from those members of the public attending the meeting or from City Staff or City Council.
~~~~~

COUNCIL AGENDA

February 11, 2014

Agenda Item **#2** Presentation of the Syracuse City and Wendy's "Award for Excellence" to Savannah Anderton and Mitchell Lindhardt.

Factual Summation

- Any questions regarding this item can be directed at CED staff. Please see the attached memos regarding the Award recipients for February 2014.

Recommendation

The Community & Economic Development Department hereby recommends that the Mayor and City Council present the "Syracuse City & Wendy's Award for Excellence to Savannah Anderton and Mitchell Lindhardt.

.

Mayor
Terry Palmer

City Council
Brian Duncan
Craig Johnson
Karianne Lisonbee
Douglas Peterson
Larry D. Shingleton

Interim City Manager
Steve Marshall

MEMORANDUM

To: Mayor and City Council

From: Community & Economic Development Department

Date: February 11, 2014

Subject: Presentation of the Syracuse City & Wendy's Award for Excellence to Savannah Anderton and Mitchell Lindhardt

---

Background

The City wishes to recognize citizens who strive for excellence in athletics, academics, arts and/or community service. To that end, in an effort to recognize students and individuals residing in the City, the Community and Economic Development, in conjunction with Jeff Gibson, present the recipients for the "Syracuse City & Wendy's Award for Excellence."

"Syracuse City & Wendy's Award for Excellence"

This monthly award recognizes the outstanding performance of a male and female who excel in athletics, academics, arts and/or community service. The following are the individuals selected for the award and the reasoning for their selection:

Savannah Anderton

Savannah is a 4th grader and top student at the Syracuse Arts academy and she works hard to stay that way. She does her best every day to strive to earn A grades. She is currently in the school play 'Alice in Wonderland' and plays the door knob. She excels in soccer and volleyball. As you can tell, Savannah is a great student in all aspects of academics and sports. She is the daughter of Ginger and Ryan Anderton on Syracuse.

- Nominated by Ms. Judy Nixon, Principal of Syracuse Arts Academy K-4th grade

Mitchell Lindhardt

Mitchell is an all around great student and 4th grader at the Syracuse Arts Academy. He works hard each day to maintain straight A's in classes. He is very talented in soccer and also plays on the LaRoca team. He is currently playing basketball on a Jr. Jazz team with the Syracuse Recreation department. And as you can see Mitchell does very well at any sport or academic challenge. He is the son of Gary and Debbie Lindhardt of Syracuse.

Both students will:

- Receive a certificate and be recognized at a City Council meeting
- Have their picture put up in City Hall and the Community Center
- Have a write up in the City Newsletter, Facebook, Twitter, and website
- Be featured on the Wendy's product TV
- Receive $10 gift certificate to Wendy's

Recommendation

The Community & Economic Development Department hereby recommends that the Mayor and City Council present the "Syracuse City & Wendy's Award for Excellence" to Savannah Anderton and Mitchell Lindhardt.

COUNCIL AGENDA
February 11, 2014

Agenda Item **"3a"** Recognition of Former Councilmember Larry Shingleton.

Factual Summation

- Councilmember Larry Shingleton was appointed to the City Council in September of 2008 and was successful in being elected to serve a full term during the 2009 election. He chose not to seek re-election and his term ended December 31, 2013.
- Councilmember Shingleton has been invited to attend the City Council meeting to receive a token of the City's gratitude for his service.

COUNCIL AGENDA
February 11, 2014

Agenda Item **"3b"** Recognition of Police Officers Stan Penrod and Lance Call for an ice save at Jensen Park.

Factual Summation

- Please see the attached letters of commendation for Officers Penrod and Call for their heroic efforts to save a boy that had fallen through the ice at Jensen Park. The letters of commendation are signed by Police Chief Garret Atkin and Mayor Terry Palmer.

Mayor
Terry Palmer

City Council
Brian Duncan
Mike Gailey
Craig Johnson
KarianneLisonbee
Douglas Peterson

January 27, 2014

Sergeant Stan Penrod
Patrol Division
Syracuse Police Department

Re. Letter of Commendation

Stan,

On January 24, 2014, you were dispatched on a report of a young boy who had fallen through the ice on the pond at Jensen Park. When you arrived, you saw the boy struggling in the water. You attempted to throw him a rope, but the rope was too short. At that point, you made the decision to put your life on the line to save this boy. In attempt to get closer to him, you stepped out onto the ice. Seconds later, the ice collapsed and you fell into the freezing water. You maintained your composure, stayed focused on the boy, and gave him clear and calming instructions. Eventually, others at the park were able to assist you with a longer rope and boy was pulled to safety.

Your actions in this situation were truly heroic. On behalf of the boy's family, the Department, and the City we thank you for your dedication and service to a grateful community.

Sincerely,

Terry Palmer
Mayor

Garret Atkin
Police Chief

Mayor
Terry Palmer

City Council
Brian Duncan
Mike Gailey
Craig Johnson
KarianneLisonbee
Douglas Peterson

January 27, 2014

Sergeant Lance Call
Support Services Division
Syracuse Police Department

Re. Letter of Commendation

Lance,

On January 24, 2014, Syracuse Police Department was dispatched on a report of a young boy who had fallen through the ice on the pond at Jensen Park. At the time, you were at the park off duty. When you noticed what was happening, you immediately went to assist Sgt. Penrod. When the boy was eventually pulled to safety, you removed your own shirt, placed it on the boy, and held him close to your body to warm him.

Your actions demonstrated the tenant that a police officer is never truly off duty and showed a high level of compassion for the child. On behalf of the boy's family, the Department, and the City we thank you for your dedication and service to a grateful community.

Sincerely,

Terry Palmer
Mayor

Garret Atkin
Police Chief

COUNCIL AGENDA
February 11, 2014

Agenda Item **"4"** Friend of the Community Business Award

Factual Summation

- Any question regarding this agenda item may be directed at City Planner Noah Steele
- Please see attached Memorandum and Supporting documentation provided by City Planner Noah Steele
- Please see attached Resolution R14-03

Mayor
Terry Palmer

City Council
Brian Duncan
Mike Gailey
Craig Johnson
Karianne Lisonbee
Douglas Peterson

Interim City Manager
Steven Marshall

MEMORANDUM

To: Mayor and City Council

From: Community and Economic Development Department

Date: February 11, 2014

Subject: Presentation of the Syracuse City "Friend of the Community" Business Awardto Yupin Martin and Thai Jasmin Restaurant.

Background

Continuing marketing efforts to support and drive commerce, the Community and Economic Development Department developed a Business Award concept for the community. The recipient of this award is Thai Jasmin.The CED Department has prepared a brief statement about the presentation for the upcoming City Council RegularSession. The background information is as follows:

Syracuse City "Friend of the Community" Business Award

To recognize the ongoing support to the residents of Syracuse from the business community, Thai Jasmin Restaurant has been selected for theSyracuse City "Friend of the Community" Business Award. Mayor Palmer and attending Council Memberswill presenta business award certificate to Thai Jasmin Restaurant, signed by the Mayor and City Manager.

An important part of the Business Award is formal recognition and presentation of a resolution at a City Council meeting. The attached resolution recognizesThai Jasminas thewinter 2014 recipient of the business award.

Thai Jasmin has been nominated because they contribute to the community by:

- Participating in local events
- Adding culture and diversity
- Creating a local business unique to Syracuse
- Providing employment opportunities

Recommendation

The Community & Economic Development Department hereby requests that the Mayor and City Council pass and adopt attached ResolutionR14-03 recognizing Yupin Martin and Thai Jasmin Restaurant as the recipient of the Syracuse City “Friend of the Community” Business Award.Furthermore, Yupin will be present at the City Council meeting, and CED staff recommends that the Mayor present the resolution to her at that time.

RESOLUTION NO. R14-03

A RESOLUTION OF THE SYRACUSE CITY COUNCIL RECONGIZING YUPIN MARTIN AND THAI JASMIN AS THE WINTER 2014 RECIPIENT OF THE SYRACUSE CITY "FRIEND OF THE COMMUNITY" BUSINESS AWARD.

WHEREAS the Syracuse City "Friend of the Community" Business Award is given to a Syracuse business that has proven itselfto be a friend of the community through social responsibility, philanthropic actions, and commitment to the community; and

WHEREAS Thai Jasmin Restaurant has been a significant business in the community andreflects positively upon the city, and isemblematic of Syracuse City values; and

WHEREAS Thai Jasmin Restaurant, through acting as an employer and contributor to numerous Syracuse City residents, events and activities, has been shown to be a highly valued "Friend of the Community".

NOW THEREFORE, BE IT RESOLVED BY THE CITY COUNCIL OF SYRACUSE CITY, UTAH, AS FOLLOWS:

Section 1.Recognition. Thai Jasmin is the recipient of the winter 2014Syracuse City "Friend of the Community" Business Award.

Section 2.Effective Date. This Resolution shall become effective immediately upon its passage.

PASSED AND ADOPTED BY THE CITY COUNCIL OF SYRACUSE CITY, STATE OF UTAH, THIS 11th DAY OF FEBRUARY, 2014.

SYRACUSECITY

ATTEST:

_____ By:_____

Cassie Z. Brown, City Recorder Terry Palmer, Mayor

COUNCIL AGENDA

February 11, 2014

Agenda Item **#5** Approval of Minutes.

Factual Summation

- Please see the draft minutes of the following meetings:
    a. Special Meeting of January 14, 2014
    b. Regular Meeting of January 14, 2014.
    c. Work Session Meeting of January 28, 2014.

- Any question regarding this agenda item may be directed at Cassie Brown, City Recorder.

Minutes of the Syracuse City Council Special Meeting, January 14, 2014.

Minutes of the Special meeting of the Syracuse City Council held on January 14, 2014, at 6:00 p.m., in the Council Chambers, 1979 West 1900 South, Syracuse City, Davis County, Utah.

Present: Councilmembers: Brian Duncan
Mike Gailey
Craig A. Johnson
Karianne Lisonbee (arrived at 6:05 p.m.)
Douglas Peterson

Mayor Terry Palmer
City Recorder Cassie Z. Brown

City Employees Present:
City Attorney Clint Drake

6:00:47 PM

1. Meeting Called to Order/Adopt Agenda

6:00:50 PM

2. Consideration of adjourning into Closed Executive Session pursuant to the provisions of Section 52-4-205 of the Open and Public Meetings Act for the purpose of discussing the character, professional competence, or physical or mental health of an individual; pending or reasonably imminent litigation; or the purchase, exchange, or lease of real property.

6:00:59 PM

COUNCILMEMBER DUNCAN MADE A MOTION TO ADJOURN INTO CLOSED EXECUTIVE SESSION PURSUANT TO THE PROVISIONS OF SECTION 52-4-205 OF THE OPEN AND PUBLIC MEETINGS ACT FOR THE PURPOSE OF DISCUSSING THE CHARACTER, PROFESSIONAL COMPETENCE, OR PHYSICAL OR MENTAL HEALTH OF AN INDIVIDUAL. COUNCILMEMBER PETERSON SECONDED THE MOTION. THE FOLLOWING ROLL CALL VOTE WAS TAKEN: VOTING "AYE" – COUNCILMEMBERS DUNCAN, GAILEY, JOHNSON, AND PETERSON. VOTING "NO" – NONE. Councilmember Lisonbee was not present when this vote was taken.

The meeting adjourned at 6:03 p.m.

The meeting reconvened at 6:55 p.m.

6:59:41 PM

At 6:59 p.m. COUNCILMEMBER GAILEY MADE A MOTION TO ADJOURN. COUNCILMEMBER JOHNSON SECONDED THE MOTION; ALL VOTED IN FAVOR.

_____	_____
Terry Palmer	Cassie Z. Brown, CMC
Mayor	City Recorder

Date approved: _____

DRAFT

Minutes of the Syracuse City Council Regular Meeting, January 14, 2014.

Minutes of the Special meeting of the Syracuse City Council held on January 14, 2014, at 7:08 p.m., in the Council Chambers, 1979 West 1900 South, Syracuse City, Davis County, Utah.

Present: Councilmembers: Brian Duncan
Mike Gailey
Craig A. Johnson
Karianne Lisonbee
Douglas Peterson

Mayor Terry Palmer
Acting City Manager/Finance Director Steve Marshall
City Recorder Cassie Z. Brown

City Employees Present:
Public Works Director Robert Whiteley
City Attorney Clint Drake
Fire Chief Eric Froerer
Police Chief Garret Atkin
Parks and Recreation Director Kresta Robinson
Community Development Director Sherrie Christensen

1. Meeting Called to Order/Adopt Agenda

Mayor Palmer called the meeting to order at 7:05 p.m. as a regularly scheduled meeting, with notice of time, place, and agenda provided 24 hours in advance to the newspaper and each Councilmember. She asked all visitors present if any wished to provide an invocation or thought; Councilmember Duncan offered an invocation. Councilmember Johnson then led all present in the Pledge of Allegiance.

7:08:19 PM

COUNCILMEMBER LISONBEE MADE A MOTION TO ADOPT THE AGENDA. COUNCILMEMBER DUNCAN SECONDED THE MOTION; ALL VOTED IN FAVOR.

7:08:46 PM

2. Presentation of the Syracuse City and Wendy's "Award for Excellence" to Mallory Borchert and Jared Davenport.

The City wishes to recognize citizens who strive for excellence in athletics, academics, arts and/or community service. To that end, in an effort to recognize students and individuals residing in the City, the Community and Economic Development, in conjunction with Jeff Gibson, present the recipients for the "Syracuse City & Wendy's Award for

Excellence". This monthly award recognizes the outstanding performance of a male and female who excel in athletics, academics, arts, and/or community service. The monthly award recipients will each receive a certificate and be recognized at a City Council meeting; have their photograph placed at City Hall and the Community Center; be written about in the City Newsletter, City's Facebook and Twitter Feed, and City's website; be featured on the Wendy's product television; and receive a $10 gift certificate to Wendy's.

Mayor Palmer noted both students receiving the award for December 2013 are from Syracuse Elementary School and she read the award nomination provided by each of their respective teachers.

Mallory Borchert

Mallory Borchert has shown the personal qualities that our community hopes to foster in the future. Daily, Mallory displays a positive attitude towards her teachers and peers. In the past three years I can truly say I've never seen her without a smile on her face. Her attitude causes the people around her to perform at the highest level in every situation. For example, Mallory was not the best volleyball player on the SAA volleyball team, but showed a highest quality of sportsmanship and team support as she encouraged her teammates to play at their highest level. This style of leadership is often hard to find in our very competitive world. Her smile brings out the best in her teammates and the result has been top performances at the state level. Mallory is a leader by example! Her classroom performance equals her athletic performance. Again, Mallory excels in the classroom by maintaining a near perfect grade point average while attending Syracuse Arts Academy. As a 7th grader she maintained a 3.94, a 3.98 as an 8th grader and a 4.0 both terms of her 9th grade year. She plays on the SAA Girls Basketball Team and Mallory currently serves as the Vice President of the Student Body Officers. If this award recognizes students that place "extra effort" into their lives and the lives of others then I feel there is no better candidate than Mallory Borchert. Mallory has all the qualities of an excellent citizen in all walks of her life. She displays the values that will move this country into a productive chapter of history.

- Nominated by Mr. Keith Donaldson, Health/PE Instructor

Jared Davenport

Jared is an amazing young man. He is a dedicated student who thoroughly enjoys learning. Jared often goes the extra mile on assignments because he is interested in what he is studying. Jared is also on the school basketball team and

works hard for the team. Jared has a quick smile and is always willing to lend a hand whether someone needs help on an assignment or someone to carry their books. Jared's Basketball coach says, "Jared is the type of player most coaches would love to have. He's always at practice, wants to be the first one to do any sort of drills, works hard both in practice and in games and is always trying to improve himself and those around him. Excellence is a word I would describe Jared as and he's very much deserving of this award." What can we say, he's a great kid! Additionally, Jared makes an amazing effort as a student to earn and maintain high grades. He has consistently earned above a 3.8 and currently has a 4.0 as a ninth grader.

-Nominated by Synda Thomas, History Instructor & Brian Wilson, Basketball Coach

7:15:13 PM

At this time, COUNCILMEMBER GAILEY MOVED TO SET ASIDE THE AGENDA AND HEAR ITEMS 5B AND 5A OUT OF ORDER. COUNCILMEMBER JOHNSON SECONDED THE MOTION; ALL VOTED IN FAVOR.

7:15:28 PM

5b. Recognition of six year old resident for saving his diabetic grandfather on Christmas.

A staff memo provided the following story as reported by Fox 13 News:

A split-second decision saved them both. It was made by a boy just six years old, after his grandfather suffered a diabetic attack behind the wheel on Christmas. The two were in the car together. When grandpa blacked-out behind the wheel, his grandson jumped out of the backseat while the vehicle was moving and was able to get life-saving help.

"He's my hero," said Ron Vedaa. The 63 year-old Type 1 diabetic owes his life to his grandson Sully. Around 2 o'clock Christmas afternoon, the two were headed down Midland road in West Haven to a family member's house. "I checked my blood about 12:30. It was a little bit on the high side," said Vedaa. "I had taken a correction, snacked on some food before we got into the car. I felt perfectly fine." But while driving his blood sugar hit 20. Normal levels are between 80 & 120.

"I remember him going slow and asking him a bunch of questions and he kept on acting all tired," said 6 year-old Sully. Moments before the Chrysler crossed to the other side of the road and crashed. "I jumped out of the

car and rolled," said Sully Fortunately, the vehicle wasn't going fast. Sully wasn't hurt and ran to the only house in the area.

"He come running up. He was scared," said homeowner David Trujillo. Trujillo's daughter called 9-1-1. He took FOX 13 to the scene. "Here's where he was," said Trujillo. "His tire was just burnt, that's all rubber there."

Grandpa's foot was still on the gas and the car was lodged on a boulder which kept it from slamming into a nearby building. Ironically, David Trujillo is also a diabetic. He was there to help and knew what to do. "We finally started opening the doors and gave him some orange juice and he finally started waking up a little bit," he said. It was a case of help from a stranger after quick action by a 6 year-old boy.

"As soon as I got to the scene I grabbed him and I was like 'I'm so proud of you!'," said Sully's mother McKell Vedaa. "I said 'Sullivan, you don't understand you saved your grandpa's life.'"

"He'll be my hero until the day I'm gone. He means a lot to me," added Ron Vedaa who admits he didn't check his blood sugar right before he got behind the wheel. He says he's learned a lesson and hopes others will from his story.

Police Chief Atkin read the news story for the record and then recognized Sully Vedaa as an honorary member of the Syracuse City Police Department. He presented Mr. Vedaa with a Police Department patch and a certificate from the Police Department and Mayor Palmer.

7:18:55 PM

5a. Recognition of Syracuse City Firefighters for life saving ice rescue at Antelope Island.

A memo from Fire Chief Froerer explained six years ago the Fire Department recognized the need concerning the possibility of an ice rescue, due to the creation of Jensen pond and locations of other bodies of water near residential and recreational areas. With the support of the City, and the dedication and professionalism that each member of the Fire Department has put forth to become trained ice rescue technicians, the Fire Department has put together an ice rescue program that is utilized throughout Davis County. Without a doubt, the positive outcome of this event is due to the actions taken by the responding crew that morning.

On December 23, 2013 at approximately 0800 hours, Station 31 received a medical call bravo response for cold exposure "a person in a boat one-hundred yards off the causeway". Engine 31 responded with Engineer Treir Allen as the acting officer and Firefighter Colt Cottrell as the engineer. A31 responded with Firefighter Chris Whetton and Firefighter Travis Smith. While responding they learned that the victim had fallen through the ice and was unable to get out. Davis

county paramedic arrived on scene and reported that a park ranger was on the ice trying to get the victim out of the water. At arrival, no boat was observed, Engineer Allen established command and ordered his crew to prepare for an ice rescue, Firefighter Whetton and Cottrell both donned the ice commander suits and firefighter Whetton was given the assignment as primary rescuer with firefighter Cottrell as his back-up rescuer. The park ranger had walked onto the ice and thrown a throw rope to the victim, the victim had wrapped the rope around him but the Ranger was unable to pull him out of the water. Firefighter Whetton followed training and ice rescue protocols and was able to quickly respond to the victim's location and properly secure the rescue sling around the victim and assess the victim's condition. The haul team which consisted of; Engineer Allen, Firefighter Cottrell, Firefighter Smith and other bystanders, quickly pulled them to the safety of the shore and started medical treatment which they performed until they relinquished care to the hospital's emergency room staff.

Chief Froerer reviewed his staff memo and presented his firefighters with a certificate of the City's appreciation.

7:24:37 PM

At this time, COUNCILMEMBER GAILEY MADE A MOTION TO RETURN TO AGENDA ITEM THREE. COUNCILMEMBER JOHNSON SECONDED THE MOTION; ALL VOTED IN FAVOR.

7:24:57 PM

3. Approval of Minutes:

The minutes of the Work Session and Regular Meetings of December 10, 2013 were reviewed.

7:25:05 PM

COUNCILMEMBER DUNCAN MADE A MOTION TO APPROVE THE MINUTES OF THE WORK SESSION AND REGULAR MEETINGS OF DECEMBER 10, 2013 AS PRESENTED. COUNCILMEMBER PETERSON SECONDED THE MOTION; ALL VOTED IN FAVOR.

7:25:22 PM

4. Public Comments

7:25:36 PM

John Lewis stated he has come here to ask the Council to consider changing the City's election laws. He has had discussions with the Lieutenant Governor and Davis County Clerk and their advice regarding this issue was for him to approach the Council. Currently the election laws call for the citizens to vote by mail, during the early voting period, or in person on Election Day. The candidates are not required to disclose the financial information associated with their campaign until 30 days after the election. He stated he feels this diminishes the transparency of the candidates and he would like for the Council to consider a change. He stated he would like the Council to implement a process that would improve transparency. He then noted he has a request that the format of City Council minutes be changed so that the minutes are a summary of the meeting similar to the minutes taken of Planning Commission meetings. He noted the Planning Commission minutes are more informational and specific while minutes of City Council meetings are very vague. He stated he would also like for City Council minutes to be posted on the website for a consecutive four years as trying to coordinate events and dates in audio recordings and written minutes has been very difficult and it shows that the minutes are not transparent or user friendly. He stated he has reviewed the Planning Commission minutes and the overall theme of the meeting is provided; that has not been the case with City Council minutes for quite a while. He added another item he would like the Council to consider relates to Government Records Access and Management Act (GRAMA) request; he is asking that the Mayor and Council set a fair policy for the charges being put upon the citizens for GRAMA requests. He stated there have been charges in the past of up to $20 per sheet and this is highly unfair and creates a suspicion that the requested information is being hidden due to the exuberant charges.

7:29:51 PM

Colby Vaughn stated he has been a resident for 10 years and he is the new owner of the Gailey property by the Intermountain Health Care (IHC) clinic on 2000 West and he will be working with staff to propose a general plan amendment for the property that is approximately 12 acres; he will be requesting the City rezone the property and approve a general plan amendment. He stated he believes R3 zoning would provide a nice buffer zone between the existing commercial and residential R2 zoning nearby.

7:31:09 PM

TJ Jensen welcomed the two newly elected officials. He then addressed item six on the agenda, which deals with the appointment of a new City Manager. He noted in the last 10 years there have been four different people working in that capacity and none of them served for a great length of time; in particular, the last City Manager did not live in Syracuse City

and had no roots in the community. He stated he feels the last few City Managers have used the position as a stepping stone to other opportunities and he feels it is important that the person chosen to fill the position have strong ties to the community. He stated that if the City Manager does not live within the City that can create uncertainty among the employees and citizens; the fact that the last City Manager lived outside of Syracuse caused a fair amount of resentment among the residents. He asked that the Council consider requiring the new City Manager to live in the City to provide additional stability.

7:33:23 PM

Gary Pratt stated the City will be reading water meters this spring and everyone will receive a bill with charges for usage that was not monitored throughout the winter months. He stated he and his wife are the only two people living in their home and they pay for 8,000 gallons of water per month though they only use approximately 2,000. He stated he feels the City should have an additional water rate bracket to supplant 'empty nesters', who are growing part of the citizenry in the community. He stated he would ask the Council to consider a change that would treat all residents more fairly and he noted it may be possible for the issue to be considered during budget preparation meetings to be held this spring.

7:34:39 PM

6. Proposed Resolution R14-01 appointing Brody Bovero as the City Manager of Syracuse City.

7:34:49 PM

COUNCILMEMBER JOHNSON MADE A MOTION TO ADOPT RESOLUTION R14-01 APPOINTING BRODY BOVERO AS THE CITY MANAGER OF SYRACUSE CITY. COUNCILMEMBER DUNCAN SECONDED THE MOTION.

7:35:16 PM

Council discussion regarding the motion ensued with each Councilmember expressing their feelings regarding the two final candidates that were considered for the position of City Manager.

7:42:54 PM

Mayor Palmer stated there has been a motion and a second to adopt the proposed resolution and he called for a vote; ALL VOTED IN FAVOR, WITH THE EXCEPTION OF COUNCILMEMBER PETERSON, WHO VOTED IN OPPOSITION.

Mr. Bovero stood to be recognized by those in attendance at the meeting.

7:44:16 PM

7. Councilmember Reports

Councilmember Lisonbee's report began at 7:44:39 PM. He was followed by Councilmembers Johnson, Peterson, Duncan, and Gailey.

7:51:29 PM

8. Mayor's Report.

Mayor Palmer's report began at 7:51:40 PM.

7:52:49 PM

9. City Manager's Report.

Acting City Manager Marshall's report began at 7:53:06 PM.

At 7:53:26 PM p.m. COUNCILMEMBER JOHNSON MADE A MOTION TO ADJOURN. COUNCILMEMBER PETERSON SECONDED THE MOTION; ALL VOTED IN FAVOR.

_____
Terry Palmer
Mayor

_____
Cassie Z. Brown, CMC
City Recorder

Date approved: _____

DRAFT

Minutes of the Syracuse City Council Work Session Meeting, January 28, 2014

Minutes of the Work Session meeting of the Syracuse City Council held on January 28, 2014, at 6:00 p.m., in the Council Work Session Room, 1979 West 1900 South, Syracuse City, Davis County, Utah.

Present: Councilmembers: Brian Duncan
Mike Gailey
Craig A. Johnson
Karianne Lisonbee
Douglas Peterson

Mayor Terry Palmer
Acting City Manager/Finance Director Steve Marshall
City Recorder Cassie Z. Brown

City Employees Present:
Public Works Director Robert Whiteley
City Attorney Clint Drake
Parks and Recreation Director Kresta Robinson
City Planner Jenny Schow
City Planner Noah Steele

The purpose of the Work Session was to receive Open and Public Meetings Act and Ethics Act Training; have a general discussion regarding future Planning Commission agenda items; review and discuss City Council appointments and assignments; review the makeup of Syracuse City Board of Adjustment; accept for review a document making amendments to the City's Engineering Standards; discuss the water feature in the City Hall lobby; and discuss Council business.

6:01:40 PM

Open and Public Meetings Act and Ethics Act Training

City Attorney Clint Drake provided the City Council and Planning Commission with the required annual training regarding the Open and Public Meetings Act and Ethics Act of the State of Utah.

6:28:09 PM

Public Comments

Kenneth Hellewell stated that as he looked at the packet for this meeting he was happy to see information regarding the C2 Commercial Zone; when he was a member of the Planning Commission the body made a recommendation to rescind the C2 zone and he provided a brief history of that recommendation, noting the Council never took a final action regarding the recommendation. He stated the City Council can still choose to act on the issue and he would recommend that they act on

it before asking the Planning Commission to do additional work on the issue. He explained the Planning Commission felt the C2 Commercial Zone was a redundant zone; when it was first created it contained many new land uses, but since that time many of the allowed land uses are also allowed in other zones, such as the General Commercial, Business Park, Neighborhood Services, or Professional Office Zones. He reiterated he would encourage the Council to act on the recommendation the Planning Commission provided to the Council in May 2013 before asking the Planning Commission to do additional work.

There was a brief discussion between Mayor Palmer and Mr. Hellewell regarding the timeline of the Planning Commission's recommendation, with Mr. Hellewell also providing an example of problems associated with the incorrect rescission of the R4 Residential Zone of the City. He stated the Planning Commission does not want to make that same mistake again. He then added there are few areas of the City that are currently zoned C2 and explained some of the owners of C2 properties have been contacted regarding the Planning Commission's recommendation and they were amenable to the recommendation.

6:32:44 PM

General discussion regarding future Planning Commission agenda items

A memo from Community Development Director Christensen explained the Planning Commission would like to discuss with the Council the following items related to the General Plan:

- General Plan Update Process
    - Timing of Update
    - Citizen Survey
    - PRD Locations
    - C-2 Zoning
    - WDC Planning
    - Annexation Review by Planning Commission
    - Applications for General Plan Amendments

The memo continued by noting the following items are the Code Sections that the Planning Commission has set as goals for 2014 to review and update. The Planning Commission is looking for any input from the Council as to priority and any additional sections that the Council would like them to review.

- Accessory Structures
- Animals-roosters
- Commercial parking regulations
- Conditional Uses in each zone
- General Land Use Regulations (Chapter 6)
- Hearing Officer (Board of Adjustment)
- Home Occupations
- Metal Buildings in Industrial zone
- Public Nuisance Ordinance
- Site triangles
- Subdivision Entry Monuments

Planning Commission Chair McCuistion summarized the staff memo and conducted the discussion regarding the items referenced in the memo.

There was extensive Council/Planning Commission discussion throughout this agenda item, with the City Council providing the Planning Commission with direction regarding many of the items included in the memo.

The Planning Commission left the meeting at 7:51:08 PM.

7:51:43 PM

Review and discuss City Council appointments and assignments

A staff memo explained that historically the City Council has reviewed the list of appointments and assignments at the beginning of each calendar year. Changes are typically made to the various appointments and assignments based on recent election results or other determining factors. The general assignment resolution that was adopted on 2013 is included herein for reference. The City has two additional appointments that have been addressed independent of the general assignment resolution: the City's position on the Wasatch Integrated Waste Management District (WIWMD) Board and the

City's position on the North Davis Sewer District (NDSD). Staff recommends the Council determine appropriate changes to the appointments and assignments in anticipation of adopting any changes at the February 11, 2014 business meeting.

The Council had a discussion to determine the appropriate appointees to the various positions and assignments. There was additional discussion regarding the City's representative on the NDSD Board, with the Council directing staff to conduct additional research regarding the appointment process and term limits in anticipation for continued discussion during the February 11 work session and business meetings.

Review makeup of Syracuse City Board of Adjustment

This item was discussed during agenda item b and, therefore, no additional discussion was necessary.

8:35:57 PM

Proposed amendments to the Engineering Standards

A staff memo from Public Works Director Whiteley explained in keeping with the good practice to maintain current engineering standards, we have carefully reviewed our current standards and are recommending a few updates, as summarized.

Roads

1. Standard cross sections and utility locations have been updated.
2. High Density Mineral Bond Seal is the new seal coat standard. Slurry seal is no longer an acceptable form of surface treatment.
3. All sidewalks shall be 6" thick where a site plan is not provided.
4. To meet the minimum International Fire Code Standard, the cul-de-sac radius has been increased from 40 feet to 50 feet to TBC.
5. ADA Ramp detail has been updated to meet current ADA standards.
6. Updated moratorium on roads to match current ordinance.
7. Street Light updated to include induction. A new drawing sheet was added.

Culinary Water

1. Restrained joints are required on all fittings and hydrants.
2. All fire hydrants shall have a Copperhead Industries, LLC Snake Pit 14" Magnetized Tracer Box with blue cast iron top (CHLD14B) installed a minimum of 12" from the front of each fire hydrant. The top of the tracer box shall match the top back of curb elevation. Tracer wire shall be run from the main with the fire hydrant lead and connected to the Test Station.
3. Valve stem risers are required on all culinary valves.
4. All culinary water line 12" and smaller in diameter shall be a minimum of DR-14 C-900.

Secondary Water

1. All secondary water line 12" and smaller in diameter shall be a minimum of DR-14 C-900.
2. Restrained joints are required on all fittings and hydrants.
3. Copperhead Industries, LLC Snake Pit 14" Magnetized Tracer Box with purple cast iron top (CHLD14P) shall be installed at the nearest secondary service to each fire hydrant. The top of the tracer box shall match the top back of curb elevation. Tracer wire shall be run from the main with the service and connected to the Test Station.

Sewer & Land Drain

1. Clarified all sewer manholes shall be vented and stamped "Sewer".
2. Clarified all land drain manholes shall be non-vented and be stamped "Land Drain."

The memo concluded detailed discussion regarding the proposed changes can take place during the February 11, 2014 work session meeting. An enacting resolution will be drafted for consideration during the February 11, 2014 business meeting.

8:42:34 PM

Discuss water feature in City Hall lobby

A memo from Acting City Manager/Finance Director Marshall explained staff wanted to give a brief history of the water feature in the City Hall lobby and discuss with the Council different ideas that could be used to fix it. When City Hall was built the original plan did not include the installation of a water feature. The foyer was built and then it was decided

after the building was nearly complete that a water fountain should be installed. Because the building was close to completion, a drain and water supply were not installed. This created a problem with stagnant water, mold, smell, maintenance issues, and discoloration of the rocks. City Planner Steele was tasked to design some ideas that could be used to fix the fountain. These ideas were included in the City Council packet as part of a PowerPoint presentation. Staff is asking the council for their ideas and direction on how we should move forward with the water feature.

8:45:38 PM

The City Council discussed the water feature with staff and gave direction to bring additional information regarding options to remove the entire water feature back to the Council during a future work session meeting.

Council business

There was no Council business

The meeting adjourned at 9:03 p.m.

_____	_____
Terry Palmer	Cassie Z. Brown, CMC
Mayor	City Recorder

Date approved: _____

COUNCIL AGENDA

February 11, 2014

Agenda Item **#7** Proposed Resolution R14-02 appointing Councilmembers to various committee positions and assignments.

Factual Summation

- Please see the following memo regarding this agenda item. Any questions regarding this item may be directed at City Recorder Cassie Brown
- Please see the attached proposed resolution regarding this agenda item.

Memorandum

At the beginning of each calendar year past Councils have reviewed the lists of appointments and assignments and made changes according to recent election results or other determining factors. This item was discussed during the January 28, 2014 work session meeting and I have prepared a resolution to formalize the decisions made during that meeting regarding the various committee assignments and appointments.

Staff Proposal

Adopt Proposed Resolution R14-02 appointing City Council members to various committee positions and assignments.

RESOLUTION R14-02

A RESOLUTION OF THE SYRACUSE CITY COUNCIL APPOINTING CITY COUNCILMEMBERS TO VARIOUS COMMITTEE POSITIONS AND ASSIGNMENTS.

WHEREAS Syracuse City Councilmembers are desirous of being appointed to and serving on various community committees and boards; and

WHEREAS there are also internal City positions, such as Mayor Pro-Tem that Councilmembers are desirous of being appointed to; and

WHEREAS the Syracuse City Council discussed committee appointments and assignments during their Work Session Meeting of January 28, 2014 and determined appropriate appointments and assignments for each Councilmember and members of the Administration.

NOW THEREFORE, BE IT RESOLVED BY THE CITY COUNCIL OF SYRACUSE CITY, UTAH, AS FOLLOWS:

Section 1. Appointment.

a. Mayor Palmer is hereby appointed to serve as the City's representative on the Clearfield High School Community Council.

b. Mayor Palmer is hereby appointed to serve as the liaison to the Youth Council.

c. Councilmember Duncan is hereby appointed to serve as a preparedness liaison.

d. Councilmember Duncan is hereby appointed to serve as an Employee Appeals Board alternate member.

e. Councilmember Duncan is hereby appointed to serve as the City's representative on the Cook Elementary Community Council.

f. Councilmember Duncan is hereby appointed to serve as the City's representative on the Syracuse High School Community Council.

g. Councilmember Gailey is hereby appointed to serve as an Employee Appeals Board member.

h. Councilmember Gailey is hereby appointed to serve as the City's representative on the Bluff Ridge Elementary Community Council.

i. Councilmember Gailey is hereby appointed to serve as the liaison to SBOSS.

j. Councilmember Gailey is hereby appointed to serve as the Museum Board Advisor.

k. Councilmember Gailey is hereby appointed to serve as the Third Mayor Pro-Tem.

l. Councilmember Gailey is hereby appointed to serve as the Youth Court Liaison.

m. Councilmember Johnson is hereby appointed to serve as a volunteer liaison.

n. Councilmember Johnson is hereby appointed to serve as a voting member on the Utah League of Cities and Towns (ULCT) Legislative Policy Committee.

o. Councilmember Johnson is hereby appointed to serve as the City's representative on the Syracuse Junior High School Community Council.

p. Councilmember Johnson is hereby appointed to serve as the liaison to the Planning Commission.

q. Councilmember Johnson is hereby appointed to serve as the Second Mayor Pro-Tem.

r. Councilmember Lisonbee is hereby appointed to serve as a volunteer liaison.

s. Councilmember Lisonbee is hereby appointed to serve as a voting member on the Utah League of Cities and Towns (ULCT) Legislative Policy Committee.

t. Councilmember Lisonbee is hereby appointed to serve as an Employee Appeals Board alternate member.

u. Councilmember Lisonbee is hereby appointed to serve as the City's representative on the Buffalo Point Community Council.

v. Councilmember Lisonbee is hereby appointed to serve as the liaison to the Arts Council.

w. Councilmember Lisonbee is hereby appointed to serve as the Mayor Pro-Tem.

x. Councilmember Peterson is hereby appointed to serve as a preparedness liaison.

y. Councilmember Peterson is hereby appointed to serve as an Employee Appeals Board member.

z. Councilmember Peterson is hereby appointed to serve as the City's representative on the Syracuse Elementary Community Council.

aa. Councilmember Peterson is hereby appointed to serve as the City's representative on the Legacy Junior High Community Council.

bb. Mayor Palmer is hereby appointed to serve as the City's representative on the Clearfield High School Community Council.

cc. Mayor Palmer is hereby appointed to serve as the liaison to the Youth Council.

dd. City Attorney Drake is hereby appointed to serve as a non-voting member on the Utah League of Cities and Towns (ULCT) Legislative Policy Committee

ee. Public Works Director Whiteley is hereby appointed to serve as the City's representative on the Layton Canal Board.

ff. Public Works Director Whiteley shall seek election to the Davis and Weber Canal Board.

Section 2. Severability. If any section, part or provision of this Resolution is held invalid or unenforceable, such invalidity or unenforceability shall not affect any other portion of this Resolution, and all sections, parts and provisions of this Resolution shall be severable.

Section 3. Effective Date. This Resolution shall become effective immediately upon its passage.

PASSED AND ADOPTED BY THE CITY COUNCIL OF SYRACUSE CITY, STATE OF UTAH, THIS 11th DAY OF FEBRUARY, 2014.

SYRACUSE CITY

ATTEST:

_____ By:_____

Cassie Z. Brown, City Recorder Terry Palmer, Mayor

COUNCIL AGENDA
February 11, 2014

Agenda Item **"8"** Proposed Resolution R14-04 appointing Councilmember Gailey to the Administrative Control Board of the Wasatch Integrated Waste Management District.

Factual Summation

- Any question regarding this agenda item may be directed at City Recorder Cassie Brown.
- The City has the opportunity to appoint one of its members to serve on the Wasatch Integrated Waste Management District (WIWMD) Administrative Control Board. Past-Mayor Nagle was appointed to this position until her term expired on December 31, 2013. The WIWMD Board meets the first Wednesday of the month at 5:00 p.m. at its offices located at 1997 E. 3500 N. in Layton.
- This item was discussed during the January 28, 2014 work session meeting and Councilmember Gailey expressed his desire to be appointed to the position; staff has drafted Proposed Resolution R14-04 to appoint Councilmember Gailey to the position.

Staff Proposal

Adopt Proposed Resolution R14-04 appointing Councilmember Gailey to the Administrative Control Board of the Wasatch Integrated Waste Management District.

RESOLUTION NO. R14-04

A RESOLUTION OF THE SYRACUSE CITY COUNCIL APPOINTING COUNCILMEMBER GAILEY TO THE ADMINISTRATIVE CONTROL BOARD OF THE WASATCH INTEGRATED WASTE MANAGEMENT DISTRICT.

WHEREAS, Syracuse City, Utah (the City) is within the boundaries of Wasatch Integrated Waste Management District (the District) and desires to appoint a member of its Governing Body to the Administrative Control Board (the Board) of the District; and

WHEREAS, the Governing Body of the City is the appointing authority for such members of the Board under Section 17A-1-101(1), Utah Code Annotated 1952, as amended; and

WHEREAS, all actions required by law in connection with the appointment made by this Resolution have been taken, including all actions required under Title 17A, Chapter 1, Part 3, Utah Code Annotated 1953, as amended.

NOW, THEREFORE, BE IT RESOLVED BY THE CITY COUNCIL OF SYRACUSE CITY, STATE OF UTAH, AS FOLLOWS:

Section 1. Appointment. Councilmember Gailey is hereby appointed by the Governing Body of the City as a member of the Board of the District. Such appointment shall be for a term equal to Councilmember Gailey's term on the Council, which shall end December 31, 2017.

Section 2. Severability. If any section, part or provision of this Resolution is held invalid or unenforceable, such invalidity or unenforceability shall not affect any other portion of this Resolution, and all sections, parts and provisions of this Resolution shall be severable.

Section 3. Effective Date. This Resolution shall become effective immediately upon its passage.

PASSED AND ADOPTED BY THE CITY COUNCIL OF SYRACUSE CITY, STATE OF UTAH, THIS 11th DAY OF FEBRUARY, 2014.

SYRACUSE CITY

ATTEST:

_____ By:_____

Cassie Z. Brown, City Recorder Terry Palmer, Mayor

COUNCIL AGENDA

February 11, 2014

Agenda Item **# 9** Proposed Resolution R14-06 appointing Councilmember Johnson as the City's representative on the Mosquito Abatement Board.

Factual Summation

- Various Councilmember appointments and assignments were discussed during the January 18, 2014 work session meeting. Councilmember Johnson expressed his desire to be appointed to serve as the City's representative on the Mosquito Abatement Board. Proposed Resolution R14-06 has been drafted to give the Council the opportunity to vote and make the appointment official. However, the ending date for Councilmember Johnson's term has been left blank and will be provided to the Council during the meeting.

Staff Proposal

Adopt Proposed Resolution R14-06 appointing Councilmember Johnson as the City's representative on the Mosquito Abatement Board.

RESOLUTION NO. R14-06

A RESOLUTION OF THE SYRACUSE CITY COUNCIL APPOINTING COUNCILMEMBER JOHNSON TO THE DAVIS COUNTY MOSQUITO ABATEMENT DISTRICT BOARD.

WHEREAS, Syracuse City, Utah (the City) is within the boundaries of the Davis County Mosquito Abatement District (the District) and desires to appoint a resident of the City to the Board of the District; and

WHEREAS, the Board Member will receive compensation in the amount determined by Davis County Mosquito Abatement District; and

WHEREAS, the Governing Body of the City is the appointing authority for such members of the Board under Section 17B-1-101 Utah Code Annotated 1952, as amended; and

NOW, THEREFORE, BE IT RESOLVED BY THE CITY COUNCIL OF SYRACUSE CITY, STATE OF UTAH, AS FOLLOWS:

Section 1. Appointment. Councilmember Johnson is hereby appointed by the Governing Body of the City as a member of the Board of the District. Such appointment shall be for a term ending .

Section 2. Severability. If any section, part or provision of this Resolution is held invalid or unenforceable, such invalidity or unenforceability shall not affect any other portion of this Resolution, and all sections, parts and provisions of this Resolution shall be severable.

Section 3. Effective Date. This Resolution shall become effective immediately upon its passage.

PASSED AND ADOPTED BY THE CITY COUNCIL OF SYRACUSE CITY, STATE OF UTAH, THIS 11th DAY OF FEBRUARY, 2014.

SYRACUSE CITY

ATTEST:

_____ By:_____

Cassie Z. Brown, City Recorder Terry Palmer, Mayor

COUNCIL AGENDA
February 11, 2014

Agenda Item **"10"** Proposed Resolution R14-05 appointing a member of the Governing Body to the North Davis Sewer District (NDSD) Board of Trustees.

Factual Summation

- The City has the opportunity to appoint one of its members to serve on the North Davis Sewer District (NDSD) Board of Trustees. Councilmember Peterson is the City's most recent appointment to the Board.
- This item was discussed during the January 28, 2014 work session meeting and the Council requested that an item be included on the February 11 work session meeting agenda to allow for further discussion of this appointment.

RESOLUTION NO. R14-05

A RESOLUTION OF THE SYRACUSE CITY COUNCIL APPOINTING TO THE BOARD OF TRUSTEES OF THE NORTH DAVIS SEWER DISTRICT.

WHEREAS, Syracuse City, Utah (the City) is within the boundaries of North Davis Sewer District (the District) and has previously appointed City Council Member Douglas Peterson to serve on the Board of the District; and

WHEREAS, the Governing Body of the City finds that it is appropriate at this time to make a change in the appointment to the District Board and is authorized to do so pursuant to *Utah Code Annotated* §17B-1-304, as amended;

NOW, THEREFORE, BE IT RESOLVED BY THE CITY COUNCIL OF SYRACUSE CITY, STATE OF UTAH, AS FOLLOWS:

Section 1. Appointment. _____ is hereby appointed by the Governing Body of Syracuse City as a member of the North Davis Sewer District Board, to serve for a term concurrent with _____'s term of office as a member of the Governing Body of the City.

Section 2. Severability. If any section, part or provision of this Resolution is held invalid or unenforceable, such invalidity or unenforceability shall not affect any other portion of this Resolution, and all sections, parts and provisions of this Resolution shall be severable.

Section 3. Effective Date. This Resolution shall become effective immediately upon its passage.

PASSED AND ADOPTED BY THE CITY COUNCIL OF SYRACUSE CITY, STATE OF UTAH, THIS 11th DAY OF FEBRUARY, 2014.

SYRACUSE CITY

ATTEST:

_____ By:_____

Cassie Z. Brown, City Recorder Terry Palmer, Mayor

COUNCIL AGENDA

February 11, 2014

Agenda Item **#11** Proposed Resolution R14-07 appointing Judy Merrill to the Syracuse City Arts Council.

Factual Summation

- Syracuse City Arts Council Chair Jamie Murray has requested that Judy Merrill be appointed as a member of the Syracuse City Arts Council. Please see the draft resolution making the requested appointment.
- Any question regarding this agenda item may be directed at Parks and Recreation Director Kresta Robinson or Ms. Murray.

RESOLUTION R14-07

A RESOLUTION OF THE SYRACUSE CITY COUNCIL APPOINTING JUDY MERRILL TO THE SYRACUSE CITY ARTS COUNCIL.

WHEREAS Title III of the Syracuse City Code provides for the establishment of a Syracuse City Arts Council; and

WHEREAS Section 3.09.020 of the Syracuse City Code dictates that no less than six (6) members of the community shall be appointed and serve on the Syracuse City Arts Council; and

WHEREAS Arts Council leadership has requested that Judy Merrill be appointed to serve as a member of the Syracuse City Arts Council.

NOW THEREFORE, BE IT RESOLVED BY THE CITY COUNCIL OF SYRACUSE CITY, UTAH, AS FOLLOWS:

Section 1. Appointment.

- Judy Merrill is hereby appointed to serve on the Syracuse City Arts Council with her term expiring July 1, 2018.

Section 2. Severability. If any section, part or provision of this Resolution is held invalid or unenforceable, such invalidity or unenforceability shall not affect any other portion of this Resolution, and all sections, parts and provisions of this Resolution shall be severable.

Section 3. Effective Date. This Resolution shall become effective immediately upon its passage.

PASSED AND ADOPTED BY THE CITY COUNCIL OF SYRACUSE CITY, STATE OF UTAH, THIS 11th DAY OF FEBRUARY, 2014.

SYRACUSE CITY

ATTEST:

_____ By:_____

Cassie Z. Brown, City Recorder Terry Palmer, Mayor

COUNCIL AGENDA
February 11, 2014

Agenda Item **"12"** Proposed Resolution R14-08 appointing Syracuse City Recorder, Treasurer, and Police Chief.

Factual Summation

- Any questions regarding this item may be directed at City Recorder Cassie Brown.
- Please see attached Proposed Resolution R14-08.
- Please see below for the memo provided by Cassie Brown.

Memorandum

Section 10-3-916 of the Utah Code dictates that following a municipal election the Mayor, with advice and consent of the Council, shall appoint an individual to the offices of City Recorder and City Treasurer. Section 2.05.090 of the Syracuse City Code dictates that the Mayor, with the advice and consent of the Council, shall also appoint an individual to the office of Chief of Police. Proposed Resolution R12-05 has been drafted to provide the Mayor and Council the opportunity to fulfill the statutory requirements defined in State Code and City Code.

Staff Proposal

Adopt Proposed Resolution R14-08 appointing Syracuse City Recorder, Treasurer, and Police Chief.

RESOLUTION R14-08

A RESOLUTION DESIGNATING AND APPOINTING CERTAIN APPOINTED OFFICERS OF SYRACUSE CITY

WHEREAS, pursuant to *Utah Code Ann*. э 10-3-916, the Mayor, with the advice and consent of the City Council, is to appoint a qualified person to each of the offices of City Recorder and Treasurer, in each year following a municipal election; and

WHEREAS, the Mayor, with the advice and consent of the City Council, is also authorized to appoint a qualified person to the office of Chief of Police; and

WHEREAS, the Mayor and the City Council desires now to appoint certain individuals to the appointive offices as more particularly provided herein below;

NOW, THEREFORE, **BE IT RESOLVED BY THE CITY COUNCIL OF CENTERVILLE CITY, STATE OF UTAH, AS FOLLOWS:**

Section 1. **Appointment.** The following are hereby appointed to the following designated offices within Syracuse City. The persons appointed shall serve at the pleasure of the City Council and until their successors are appointed and qualified. The persons appointed and their appointments made herein shall be subject to the ordinances, rules and regulations of Syracuse City and the laws of the State of Utah.

City Recorder	Cassie Brown
City Treasurer	Brody Bovero
Chief of Police	Garret Atkin

Section 2. **Severability.** If any section, part or provision of this Resolution is held invalid or unenforceable, such invalidity or unenforceability shall not affect any other portion of this Resolution, and all sections, parts and provisions of this Resolution shall be severable.

Section 3. **Effective Date.** This Resolution shall become effective immediately upon its passage.

PASSED AND ADOPTED BY THE CITY COUNCIL OF SYRACUSE CITY, STATE OF UTAH, THIS 11th DAY OF FEBRUARY, 2014.

SYRACUSE CITY

ATTEST:

_____ By:_____

Cassie Z. Brown, City Recorder Terry Palmer, Mayor

COUNCIL AGENDA

February 11, 2014

Agenda Item **#13** Public Hearing – Proposed Resolution R14-09 amending the Syracuse City Consolidated Fee Schedule by making adjustments throughout.

Factual Summation

- Any question regarding this agenda item may be directed at Finance Director Stephen Marshall. See the attached consolidate fee schedule.

- Staff periodically reviews and recommends changes to the consolidated fee schedule. I am recommending the following changes outlined in red in Exhibit A. Most changes are minor with the exception of the parks, trails, and recreation impact fee update. If you remember, the council approved in November 2013 by ordinance the parks, trails, and recreation impact fee analysis and also the parks, trails, and recreation impact fee facilities plan. By law, there was a 90 day waiting period before the fee could be enacted. The 90 day waiting period expired on February 10, 2014. Therefore, I have included this change in the consolidated fee schedule. This fee is consistent with the recommended fee in the impact fee analysis plan that was adopted.

Staff Recommendation

- ***Adopt proposed resolution amending the Syracuse City Consolidated Fee Schedule by making the recommended changes throughout.***

RESOLUTION NO. R14-09

A RESOLUTION OF THE SYRACUSE CITY COUNCIL UPDATING AND AMENDING THE SYRACUSE CITY CONSOLIDATED FEE SCHEDULE BY MAKING ADJUSTMENTS THROUGHOUT.

WHEREAS, Syracuse City Staff has reviewed and analyzed the fees charged by the City for various services, permits and procedures and has recommended various changes to such fees as more particularly provided in the attached consolidated Syracuse City Fee Schedule; and

WHEREAS, the City Council desires to adopt the revised Syracuse City Fee Schedule as recommended by Staff and as more particularly provided herein; and

NOW, THEREFORE, BE IT RESOLVED BY THE CITY COUNCIL OF SYRACUSE CITY, STATE OF UTAH, AS FOLLOWS:

Section 1. Amendment. The Syracuse City Fee Schedule is hereby updated and amended to read in its entirety as set forth in **Exhibit "A,"** attached hereto and incorporated herein by this reference.

Section 2. Severability. If any section, part or provision of this Resolution is held invalid or unenforceable, such invalidity or unenforceability shall not affect any other portion of this Resolution, and all sections, parts and provisions of this Resolution shall be severable.

Section 3. Effective Date. This Resolution shall become effective immediately upon its passage.

PASSED AND ADOPTED BY THE CITY COUNCIL OF SYRACUSE CITY, STATE OF UTAH, THIS 11th DAY OF FEBRUARY, 2014.

SYRACUSE CITY

ATTEST:

_____ By:_____

Cassie Z. Brown, City Recorder Terry Palmer, Mayor

Fee Description		Current Base Fee	Additional Fee	Proposed Base Fee	Proposed Additional Fee	Base Fee Increase	Additional Fee Increase
Bond Fees							
Landscaping Bond		$55.00 per Permit	NA NA				
Performance & Guaranty for Temporary Occupancy		100% of value	10% Administration Fee				
Plan Check Fees							
Residential	All Permitted Structures	40% Permit Fee	NA NA				
Residential - Duplicate multi-family structure		50% of original plan check fee					
NOTE: Applicable within 1 year of first permit issuance and within the same ICC code period							
Commercial	All Permitted Structures	65% Permit Fee	NA NA				
Building Investigation Fee	All Permitted Structures	100% % Permit Fee	NA NA				
Fire Sprinkler/Safety Plans	All Permitted Structures	$75.00 Per Hour	NA NA				
Additional Plan Review Due to Revisions		$56.40 Per Hour (1/2 hr min.)	NA NA				
General Building Valuation							
Building Value from $1-1,000.00		$56.40 ea. Unit	NA NA				
Building Value from $1,001-2,000		$56.40 ea. Unit	$2.70 ea. addl. $100 or fraction therof				
Building Value from $2,001-25,000		$83.40 ea. Unit	$16.80 ea. addl. $1000 or fraction therof				
Building Value from $25,001-50,000		$469.80 ea. Unit	$12.11 ea. addl. $1000 or fraction therof				
Building Value from $50,001-100,000		$772.55 ea. Unit	$8.40 ea. addl. $1000 or fraction therof				
Building Value from $100,001-500,000		$1,192.55 ea. Unit	$6.72 ea. addl. $1000 or fraction therof				
Building Value from $501,000-1,000,000		$3,880.55 ea. Unit	$5.70 ea. addl. $1000 or fraction therof				
Building Value from $1,000,000.00+		$6,730.55 ea. Unit	$4.65 ea. addl. $1000 or fraction therof				
Pools, Tubs & Spas							
Public Pool		Bid Price ea. Unit	NA NA				
Private Pool - In Ground		Bid Price ea. Unit	NA NA				
Private Pool - Above Ground Temporary		$56.40 ea. Unit					
Private Pool - Above Ground Permenant		Bid Price ea. Unit	NA NA				
Storage Sheds		Construction Value ea. Unit	NA NA				
Storage Sheds - Re-siding only		$47.00 ea. Unit	NA NA				
State Fee (Surcharge)		1% of Permit Fee	NA NA				
Expired Permit							
Less Than to 180 days		65% Building Value	NA NA				
Greater than 180 Days but Lesss Than 1 Year		65% of Original Permit Cost	NA NA				
Greater Than 1 Year		100% of Original Permit Cost	NA NA				
Impact Fees							
Parks, Trails, and Recreation				$2,393.56	Per Household		
~~Park Development~~		~~$1,653.00 Per Connection~~					
~~Park Development (Existing System Buy-In)~~		~~$310.00 Per Connection~~					
~~Park Purchase (Land Dedicated and the Time of Development)~~			~~NA NA~~				
~~R-1~~		~~0.020 Acres Per Gross Acre~~					
~~R-2~~		~~0.026 Acres Per Gross Acre~~					
~~R-3~~		~~0.037 Acres Per Gross Acre~~					
~~R-4~~		~~0.098 Acres Per Gross Acre~~					
~~PRD~~		~~0.056 Acres Per Gross Acre~~					
~~C-2~~		~~0.063 Acres Per Gross Acre~~					
~~A-1~~		~~0.003 Acres Per Gross Acre~~					
~~Park Purchase (Existing System Buy-In)~~							
~~R-1~~		~~$140.43 Per Developed Acre~~					
~~R-2~~		~~$183.53 Per Developed Acre~~					
~~R-3~~		~~$263.43 Per Developed Acre~~					
~~R-4~~		~~$703.13 Per Developed Acre~~					
~~PRD~~		~~$387.40 Per Developed Acre~~					
~~C-2~~		~~$440.67 Per Developed Acre~~					
~~A-1~~		~~$24.21 Per Developed Acre~~					
Residential Transportation	Single Family Residence	$1,131.00 Per Unit	NA NA				
Residential Transportation	All other types/units	$705.00 Per Unit	NA NA				
Commercial Transportation							
General Commercial		$2,328.00 Per 1,000 sf of GFA	NA NA				
Office/Institutional		$2,428.00 Per 1,000 sf of GFA	NA NA				

Fee Description	Current Base Fee		Additional Fee		Proposed Base Fee	Proposed Additional Fee	Base Fee Increase	Additional Fee Increase
Industrial	$668.00	Per 1,000 sf of GFA	NA	NA				
Culinary Water								
¾" Line	$966.00	ea. Unit	NA	NA				
1" Line	$1,610.00	ea. Unit	NA	NA				
1½" Line	$4,999.00	ea. Unit	NA	NA				
2" Line	$7,997.00	ea. Unit	NA	NA				
3" Line	$15,994.00	ea. Unit	NA	NA				
4" Line	$24,991.00	ea. Unit	NA	NA				
6" Line	$49,981.00	ea. Unit	NA	NA				
8" Line	$79,970.00	ea. Unit	NA	NA				
Secondary Water - Residential								
4,000-7,000sf lot	$523.03	ea. Unit	NA	NA				
7,001-8,000sf lot	$760.31	ea. Unit	NA	NA				
8,001-9,000sf lot	$883.18	ea. Unit	NA	NA				
9,001-10,000sf lot	$1,008.44	ea. Unit	NA	NA				
10,001-11,000sf lot	$1,135.85	ea. Unit	NA	NA				
11,001-13,000sf lot	$1,330.48	ea. Unit	NA	NA				
13,001-15,000sf lot	$1,595.85	ea. Unit	NA	NA				
15,001-17,000sf lot	$1,867.01	ea. Unit	NA	NA				
17,001-19,000sf lot	$2,143.25	ea. Unit	NA	NA				
19,001-21,000sf lot	$2,423.98	ea. Unit	NA	NA				
21,001-23,000sf lot	$2,708.76	ea. Unit	NA	NA				
23,001-25,000sf lot	$2,997.23	ea. Unit	NA	NA				
25,001-27,000sf lot	$3,289.06	ea. Unit	NA	NA				
27,001-30,000sf lot	$3,658.21	ea. Unit	NA	NA				
30,001-33,000sf lot	$4,107.02	ea. Unit	NA	NA				
33,001-36,000sf lot	$4,561.61	ea. Unit	NA	NA				
36,001-39,000sf lot	$5,021.48	ea. Unit	NA	NA				
39,001-42,000sf lot	$5,486.20	ea. Unit	NA	NA				
42,001-45,000sf lot	$5,955.43	ea. Unit	NA	NA				
45,001-48000sf lot	$6,428.84	ea. Unit	NA	NA				
48,001-51,000sf lot	$6,906.17	ea. Unit	NA	NA				
51,001-54,000sf lot	$7,387.17	ea. Unit	NA	NA				
54,001-57,000sf lot	$7,871.64	ea. Unit	NA	NA				
57,001-60,000sf lot	$8,359.39	ea. Unit	NA	NA				
Secondary Water - Open Land in a Commercial Subdivision	$0.17	sf of pervious area	NA	NA				
Sewer - North Davis Sewer District (Fee)	$3,000.00	per Connection	NA	NA				
Sewer - Storm (ENR Construction Index)								
R1	$4,748.00	per acre or 0.109 sf	NA	NA				
R2	$5,053.00	per acre or 0.116 sf	NA	NA				
R3	$5,532.00	per acre or 0.127 sf	NA	NA				
R4	$6,316.00	per acre or 0.145 sf	NA	NA				
PRD	$6,011.00	per acre or 0.138 sf	NA	NA				
GC	$11,369.00	per acre or 0.261 sf	NA	NA				
C2	$10,716.00	per acre or 0.246 sf	NA	NA				
I1	$11,369.00	per acre or 0.261 sf	NA	NA				
A1	$3,006.00	per acre or 0.069 sf	NA	NA				
PO	$11,369.00	per acre or 0.261 sf	NA	NA				
Public Safety								
Residential	$225.16	per application	NA	NA				
Commercial	$0.0440	Per sf of building	NA	NA				
Connection Fees								
Culinary Water								
3/4" Meter	$325.00	ea. Unit	NA	NA				
1" Meter	$485.00	ea. Unit	NA	NA				
1 ½" Meter	$680.00	ea. Unit	NA	NA				
2" Meter	$983.00	ea. Unit	NA	NA				

Fee Description		Current Base Fee		Additional Fee		Proposed Base Fee	Proposed Additional Fee	Base Fee Increase	Additional Fee Increase
3" Meter		$1,699.50	ea. Unit	NA	NA				
4" Meter		$3,005.00	ea. Unit	NA	NA				
6" Meter		$4,782.00	ea. Unit	NA	NA				
8" Meter		$7,143.00	ea. Unit	NA	NA				
Secondary Water									
¾" Line		$300.00	ea. Unit	NA	NA				
1" Line		$400.00	ea. Unit	NA	NA				
1½" Line		$600.00	ea. Unit	NA	NA				
2" Line		$800.00	ea. Unit	NA	NA				
3" Line		$1,200.00	ea. Unit	NA	NA				
4" Line		$1,600.00	ea. Unit	NA	NA				
6" Line		$2,000.00	ea. Unit	NA	NA				
8" Line		$2,400.00	ea. Unit	NA	NA				
Sewer - North Davis Sewer District (Connection)		$240.00	per Connection	NA	NA				
Sewer - City Connection		$300.00	ea. Unit	NA	NA				
Review for 8" Main Line		$250.00							
Inspection Fees									
Outside of normal business hours		$56.40	per incident (2 hr min.)	NA	NA				
Re-Inspections		$56.40	per Hour	NA	NA				
Plan Changes			2 x Plan Fee	NA	NA				
Inspection with no fee indicated		$56.40	per Hour (1/2 hour min.)	NA	NA				
Additional Plan Reviews Due to Revisions		$56.40	per Hour (1/2 hour min.)						
Miscellaneous/Requested Inspections		$56.40	per Hour (1/2 hour min.)	NA	NA				
Final Off-Site Inspection		$15.00	per Lot	NA	NA				
Final Off-Site Inspection Items									
Culinary Water		$0.183	per lf	NA	NA				
Secondary Water		$0.124	per lf	NA	NA				
Sanitary Sewer		$0.183	per lf	NA	NA				
Storm Drain		$0.143	per lf	NA	NA				
Land Drain		$0.178	per lf	NA	NA				
Curb and Gutter		$0.038	per lf	NA	NA				
Sidewalk		$0.019	per lf	NA	NA				
Road		$0.111	per lf	NA	NA				
Hydrant Test		$10.00	per Hydrant	NA	NA				
Smoke Test		$6.00	per Lot	NA	NA				
Streetlight		$6.00	per Streetlight	NA	NA				
Warranty Inspections									
First Final Warranty		$0.00	per Project	NA	NA				
Final Warranty Re-inspection (if punch list is complete)		$0.00	per Project	NA	NA				
Third Final Warranty		$75.00	per Project	NA	NA				
Fourth Final Warranty		$100.00	per Project	NA	NA				
3rd Party Project or Plan Review Fee		Variable	Fee assessed to the project applicant						
Sign Permit Fees									
Permanent Attached		Sign Valuation	per Sign	NA	NA				
Temporary Attached	5 days max.	$35.00	per Sign	NA	NA				
Permanent Detached		Sign Valuation	Per Sign	State Fee	per Sign				
Temporary Detached	5 days max.	$35.00	per Sign	NA	NA				
Sign Reclamation fee (Illegal sign)		$10.00	per Sign	NA	NA				
Sign Reclamation fee (Repeat offenses)		$40.00	per Sign	NA	NA				

*All permits and reviews are subject to a 1% surcharge imposed by the State of Utah Division of Professional Licensure

**Not every situation is foreseen; fees may be based on bid amounts or the total number of inspections to complete a project

***A per inspection fee is calculated at $56.40/inspection to offset the cost of additional inspections

Community Development *All Fees Are Effective July 1, 2013 Except As Noted (All fees paid with credit card are subject to 1% fee)*

Fee Description	Current Base Fee	Additional Fee	Proposed Base Fee	Proposed Additional Fee	Base Fee Increase	Additional Fee Increase
Development Application Fees						
Commercial Site Plan*						
0-5 Acres	$575.00 per Plan set	$55.00 per Acre				
5.01-10 acres	$1,585.00 per Plan set	$173.00 per Acre				
10.01-15 acres	$2,450.00 per Plan set	$144.00 per Acre				
15.1-20 acres	$3,170.00 per Plan set	$115.00 per Acre				
> 20.1 acres	$3,745.00 per Plan set	$100.00 per Acre				
Each Revised Plan*	$250.00 per Plan set	$50.00 per Lot				
Site Plan Amendment (minor)	$100.00 per Plan set	NA NA				
Site Plan Including Conditional use	$650.00 per Plan set	$55.00 per acre				
Site Plan Nonconforming Use/Lot Review Fee	$35.00 per Plan set	NA NA				
Residential Development Plat*						
Sketch Plan	$225.00 per Plan set	$25.00 per Lot				
Each Revised Sketch Plan	$50.00 per Plan set	$15.00 per Lot				
Preliminary Plan	$575.00 per Plan set	$50.00 per Lot				
Each Revised Preliminary Plan	$150.00 per Plan set	$15.00 per Lot				
Final Plan	$575.00 per Plan set	$75.00 per Lot				
Each Revised Final Plan	$250.00 per Plan set	$50.00 per Lot				
Staff Review Fees						
Amended Subdivision	$550.00 per Plan set	$50.00 per Lot				
Residential Multi-Family	$750.00 per Plan set	1.00% Bond Amount				
All Addtitional Reviews Required by Plan Changes	$56.40 per Hour (1/2 hour min.)	$0.00 NA				
Ge(Private Pool - Above Ground Permenant	Bid Price Per Hour					
Administrative Fees						
Appeal to Board of Adjustments	$200.00 per appeal	NA NA				
Plat Recording Fee (Per County Recorders Fee Schedule)	$37.00 per Plat	$1/lot + $1/signature over 2 + $1/each common space				
Payback or Reimbursement Agreement	$500.00 per agreement	NA NA				
Application Fees	$0.65					
General Plan Amendment ~~(< 5 acres)~~	$450.00 per Application	NA NA				
~~General Plan Amendment / Rezone Combined Application~~	~~$450.00 per Application~~					
Re-Zone	$425.00 per Application	$0.00 NA				
Conditional Use (Major)	$100.00 per Application	~~Direct costs for noticing~~	Public Noticing Fees			
Conditional Use (Minor)						
Conditional Use Extension or Modification (Major)	$50.00 per Application	NA NA				
Conditional Use Extension or Modification (Minor)						
Agricultural Protection Area Designation	$250.00 per Application	$25.00 NA				
Annexation Petition and Review						
0-2 acres	$230.00 per Application	$173.00 per Acre				
2.1-5 acres	$575.00 per Application	$144.00 per Acre				
5.1-10 acres	$1,007.00 per Application	$115.00 per Acre				
> 10 acres	$1,582.00 per Application	$87.00 per Acre				
Home Occupation	$45.00 per Application	NA NA				
Commercial Business	$25.00 per Application	NA NA				
Public Noticing Fees						
Public Notice Signs	$6.00 Per Sign					
Mailing List Generation	$25.00 per Application					
Noticing Fee for impacted residents	$1.00 Per Address					
Business License Fees						
Business License Amendment	$5.00 per Application	NA NA				
Business License Listing	$5.00 per copy	NA NA				
Home Occupation	$75.00 per Application	NA NA				
Commercial Business (Temporary - 6 months Max.)	$25.00 per Application	NA NA				
License Fee - Commercial Retail Business						
< 5,000 sf	$75.00 per Application	NA NA				
5,001-10,000 sf	$125.00 per Application	NA NA				
> 10,001 sf	$350.00 per Application	NA NA				
License Fee - Commercial Business						
Professional Services	$75.00 per Application	NA NA				
General Services	$75.00 per Application	NA NA				
Food Establishment	$75.00 per Application	NA NA				
Sexually Oriented Business (SOB)						
Sexually Oriented Business (SOB)	$950.00 per Application	NA NA				
Escort Services	$950.00 per Application	NA NA				
Nude Entertainment Business	$950.00 per Application	NA NA				

Amended 02-11-14

Fee Description	Current Base Fee	Additional Fee	Proposed Base Fee	Proposed Additional Fee	Base Fee Increase	Additional Fee Increase
Nude Entertainment Employee	$250.00 per Application	NA NA				
Semi-Nude Entertainment Business	$950.00 per Application	NA NA				
Semi-nude Entertainment Employee	$250.00 per Application	NA NA				
Nude Entertainment Employee (Outcall, on-site and non-performing nude entertainment/dancing agency employees)	$250.00 per Application	NA NA				
Nude Dancing Agency	$950.00 per Application	NA NA				
Semi-Nude Dancing Agency	$950.00 per Application	NA NA				
Outcall Agency	$950.00 per Application	NA NA				
Outcall Agency Employee (Off-site services)	$250.00 per Application	NA NA				
Disclosure Application investigation	$50.00 per Application	NA NA				
Outcall Agency Employee (Off-site services)	$252.00 per Application	NA NA				
Application for 2+ Licenses at one time	$20.00 per Application	Higher of applicable fees				
Outcall Agency Employee (Off-site services)	$254.00 per Application	NA NA				
Solicitors/Mobile Sales/Vendors (annual fee)	$25.00 per Application	NA NA				
License per solicitor	$25.00 per Month	NA NA				
Alcoholic Beverages						
Class "A"	$200.00 per Application	NA NA				
Class "B"	$300.00 per Application	NA NA				
Pawn Shops	$450.00 per Application	NA NA				
Duplicate Business License	$5.00 per Application	NA NA				
Late Payment Fees						
Paid after Jan 31	50.00% of renewal fee					
Paid after Feb. 28	75.00% of renewal fee					
Paid after Mar 31	100.00% of renewal fee					
Fines						
Utility Excavation without a Permit	$250.00 per Incident	NA NA				
Storm Water Pollution - Illicit Discharge	$200.00 Per Incident					
Storm Water - Post contsruction BMP removal	$100.00 Per BMP					
Construction Activity Without a Permit when required	$100.00 per Incident	NA NA				
Operating without a business license	$15.00 per Incident	Certified mailing costs				
Late Payment Fees	$10.00 per month					
Weed Mowing (Code Enforcement)						
Class B - A parcel of 1/4 acre or less with weeds and/or a heavy amount of trash (i.e. tires, building materials, stumps, etc.)			$170.00			
Class C - A parcel greater than 1/4 acre, but less than 1/2 acre with weeds and/or a small amount of trash			$180.00			
Class D - A parcel greater than 1/4 acre, but less than 1/2 acre with weeds and/or a heavy amount of trash (i.e. tires, building materials, stumps, etc.)			$205.00			
Class E - A parcel greater than 1/2 acre, but less than 3/4 acre with weeds and/or a small amount of trash			$225.00			
Class F - A parcel greater than 1/2 acre, but less than 3/4 acre with weeds and/or a heavy amount of trash (i.e. tires, building materials, stumps, etc.)			$255.00			
Class G - A parcel greater than 3/4 acre, but less than 1 acre with weeds and/or a small amount of trash			$262.50			
Class H - A parcel greater than 3/4 acre, but less than 1 acre with weeds and or a heavy amount of trash (i.e. tires, building materials, stumps, etc.)			$352.50			
Class I - A parcel greater than 1 acre, but less than 2 acres with weeds and/or a small amount of trash			$375.00			
Class J - A parcel greater than 1 acre, but less than 2 acres with weeds and/or a heavy amount of trash (i.e. tires, building materials, stumps, etc.)			$412.50			
Class K - A parcel greater than 2 acres, but less than 3 acres with weeds and/or a small amount of trash			$457.50			
Class L - A parcel greater than 2 acres, but less than 3 acres with weeds and/or a heavy amount of trash (i.e. tires, building materials, stumps, etc.)			$615.00			
Special Class - Special nuisances not easily classified requiring hourly fees for drivers, trucks, tractors, and hand work.			bids will be obtained from contractors.			
1/4 acre = 10,890 square feet						
1/2 acre = 21,780 square feet						
3/4 acre = 32,674 square feet						
1 acre = 43,560 square feet						
**All rates include dump fees						
Administration Fee for each subsequent weed mowing incident	$50.00 per incident	NA NA				
Hourly Rates						
Weedeater				$33.00		
Edger				$33.00		
Leaf Blower				$33.00		
Push Mower				$36.00		
Small Riding Mower				$43.50		
Large Riding Mower				$52.50		
Tractor				$75.00		
Truck/Trailer				$82.50		
Tractor/Mower				$78.00		
**Hourly rates include operator, equipment, and all incidentals required to complete the work.						
Excavation Permit Fees						
NOTE: Trench Repair Fees for Excavations bebtween October 15th and May 15th are double fee shown						
Administrative Fee	$47.00 per applciation					

Amended 02-11-14

Fee Description	Current Base Fee	Additional Fee	Proposed Base Fee	Proposed Additional Fee	Base Fee Increase	Additional Fee Increase
Curb & Gutter Repair	$20.00 per lf	NA NA				
Sidewalk Repair	$10.00 per lf	NA NA				
Phone/Power/Cable Trench Repair Fee for Perpendicular Cuts						
26'-0" Wide Road (50' ROW)						
1'-0" to 13'-0" Cut	$46.14 per Application	NA NA				
14'-0" to 26'-0" Cut	$92.40 per Application	NA NA				
32'-0"' Wide Road (50'-60' ROW)						
1'-0" to 16'-0" Cut	$56.88 per Application	NA NA				
Cut 17'-0" to 32'-0" Cut	$132.64 per Application	NA NA				
36-0"' Wide Road (60' ROW)						
1'-0" to 18'-0" Cut	$63.96 per Application	NA NA				
19'-0" to 36'-0" Cut	$127.92 per Application	NA NA				
42'-0" Wide Road (66' ROW)						
1'-0" to 21'-0" Cut	$78.12 per Application	NA NA				
22'-0" to 42'-0" Cut	$156.42 per Application	NA NA				
56'-0" Wide Road (80' ROW)						
1'-0" to 21'-0" Cut	$78.12 per Application	NA NA				
22'-0" to 35'-0" Cut	$127.92 per Application	NA NA				
36'-0" to 56'-0" Cut	$198.80 per Application	NA NA				
Water Line Trench Repair Fee for Perpendicular Cuts						
26'-0" Wide Road (50' ROW)						
1'-0" to 13'-0" Cut	$53.83 per Application	NA NA				
14'-0" to 26'-0" Cut	$107.66 per Application	NA NA				
32'-0"' Wide Road (50'-60' ROW)						
1'-0" to 16'-0" Cut	$66.36 per Application	NA NA				
Cut 17'-0" to 32'-0" Cut	$132.72 per Application	NA NA				
36-0"' Wide Road (60' ROW)						
1'-0" to 18'-0" Cut	$74.62 per Application	NA NA				
19'-0" to 36'-0" Cut	$149.24 per Application	NA NA				
42'-0" Wide Road (66' ROW)						
1'-0" to 21'-0" Cut	$87.08 per Application	NA NA				
22'-0" to 42'-0" Cut	$174.16 per Application	NA NA				
56'-0" Wide Road (80' ROW)						
1'-0" to 21'-0" Cut	$87.08 per Application	NA NA				
22'-0" to 35'-0" Cut	$145.46 per Application	NA NA				
36'-0" to 56'-0" Cut	$232.12 per Application	NA NA				
Storm Drain Lines Trench Repair Fee for Perpendicular Cuts						
26'-0" Wide Road (50' ROW)						
1'-0" to 13'-0" Cut	$61.52 per Application	NA NA				
14'-0" to 26'-0" Cut	$123.04 per Application	NA NA				
32'-0"' Wide Road (50'-60' ROW)						
1'-0" to 16'-0" Cut	$75.84 per Application	NA NA				
Cut 17'-0" to 32'-0" Cut	$151.68 per Application	NA NA				
36-0"' Wide Road (60' ROW)						
1'-0" to 18'-0" Cut	$85.25 per Application	NA NA				
19'-0" to 36'-0" Cut	$170.56 per Application	NA NA				
42'-0" Wide Road (66' ROW)						
1'-0" to 21'-0" Cut	$99.52 per Application	NA NA				
22'-0" to 42'-0" Cut	$199.04 per Application	NA NA				
56'-0" Wide Road (80' ROW)						
1'-0" to 21'-0" Cut	$99.52 per Application	NA NA				
22'-0" to 35'-0" Cut	$166.24 per Application	NA NA				
36'-0" to 56'-0" Cut	$265.28 per Application	NA NA				
Sanitary Sewer Lines Trench Repair Fee for Perpendicular Cuts						
26'-0" Wide Road (50' ROW)						
1'-0" to 13'-0" Cut	$69.21 per Application	NA NA				
14'-0" to 26'-0" Cut	$138.24 per Application	NA NA				
32'-0"' Wide Road (50'-60' ROW)						
1'-0" to 16'-0" Cut	$85.32 per Application	NA NA				
Cut 17'-0" to 32'-0" Cut	$170.64 per Application	NA NA				
36-0"' Wide Road (60' ROW)						
1'-0" to 18'-0" Cut	$99.40 per Application	NA NA				
19'-0" to 36'-0" Cut	$191.88 per Application	NA NA				
42'-0" Wide Road (66' ROW)						

Fee Description	Current Base Fee		Additional Fee		Proposed Base Fee	Proposed Additional Fee	Base Fee Increase	Additional Fee Increase
1'-0" to 21'-0" Cut	$111.96	per Application	NA	NA				
22'-0" to 42'-0" Cut	$223.92	per Application	NA	NA				
56'-0" Wide Road (80' ROW)								
1'-0" to 21'-0" Cut	$111.96	per Application	NA	NA				
22'-0" to 35'-0" Cut	$187.02	per Application	NA	NA				
36'-0" to 56'-0" Cut	$298.44	per Application	NA	NA				
Combined Trench Repair Fee for Perpendicular Cuts	$35.00							
26'-0" Wide Road (50' ROW)	Sign Valuation	Per Sign						
1'-0" to 13'-0" Cut	$35.00	per Application	NA	NA				
14'-0" to 26'-0" Cut	$153.60	per Application	NA	NA				
32'-0"' Wide Road (50'-60' ROW)								
1'-0" to 16'-0" Cut	$94.80	per Application	NA	NA				
Cut 17'-0" to 32'-0" Cut	$189.60	per Application	NA	NA				
36-0"' Wide Road (60' ROW)								
1'-0" to 18'-0" Cut	$106.60	per Application	NA	NA				
19'-0" to 36'-0" Cut	$213.20	per Application	NA	NA				
42'-0" Wide Road (66' ROW)								
1'-0" to 21'-0" Cut	$124.40	per Application	NA	NA				
22'-0" to 42'-0" Cut	$248.80	per Application	NA	NA				
56'-0" Wide Road (80' ROW)								
1'-0" to 21'-0" Cut	$124.40	per Application	NA	NA				
22'-0" to 35'-0" Cut	$207.80	per Application	NA	NA				
36'-0" to 56'-0" Cut	$331.60	per Application	NA	NA				
Trench Repair Fee for Parallel Cuts								
26'-0" Wide Road (50' ROW)								
1'-0" to 13'-0" Cut	$3.85	per foot of resurface	NA	NA				
14'-0" to 26'-0" Cut	$7.70	per foot of resurface	NA	NA				
32'-0"' Wide Road (50'-60' ROW)								
1'-0" to 16'-0" Cut	$4.74	per foot of resurface	NA	NA				
Cut 17'-0" to 32'-0" Cut	$9.47	per foot of resurface	NA	NA				
36-0"' Wide Road (60' ROW)								
1'-0" to 18'-0" Cut	$5.33	per foot of resurface	NA	NA				
19'-0" to 36'-0" Cut	$10.66	per foot of resurface	NA	NA				
42'-0" Wide Road (66' ROW)								
1'-0" to 21'-0" Cut	$6.22	per foot of resurface	NA	NA				
22'-0" to 42'-0" Cut	$12.44	per foot of resurface	NA	NA				
56'-0" Wide Road (80' ROW)								
1'-0" to 21'-0" Cut	$6.22	per foot of resurface	NA	NA				
22'-0" to 35'-0" Cut	$10.36	per foot of resurface	NA	NA				
36'-0" to 56'-0" Cut	$16.58	per foot of resurface	NA	NA				

* Site Plan Review includes one (1) additional corrections review after first submittal

Storm Water Activity Permit Fees		
Storm Water Permit Fees	$50.00	Per application
Deposit - Storm Water Activity Permit	$1,000.00	Per application

Newsletter Advertising Fees

NOTE: See Resolution R10-13 for policies governing advertising in City Newsletter

	Per Issue Rate
Full page ad (8.5" x 11")	$400.00
Half page ad	$225.00
Quarter page ad	$125.00
Eight page ad	$60.00

Utility Bill Advertising Fees

NOTE: See Resolution R11- for policies governing advertising on the Utility Bill

	Per Issue Rate	
Full page color ad (8.5" x 11")		$600.00
Full page black and white ad (8.5" x 11")	~~$400.00~~	$400.00
Half page color ad		$500.00
Half page black and white ad	~~$225.00~~	$250.00

Amended 02-11-14

Fee Description	Current Base Fee	Additional Fee	Proposed Base Fee	Proposed Additional Fee	Base Fee Increase	Additional Fee Increase
Utility Rates						
Garbage Service						
Service	$10.45 per month	N/A NA				
New Garbage Can Set-up	$100.00 ea. Unit	NA NA				
Extra Garbage Can (Limit 3)	$7.20 ea. Unit	NA NA				
Green Waste Can	$6.50 ea. Unit	N/A N/A				
Replacement Cost	$90.00 per can	NA NA				
Early Return of Extra Can(s) - less than six (6) months	$35.00 per can	NA NA				
Street Lighting (Effective May 1st, 2009)						
Street Ligting Power Fee	$1.00 per month	NA NA				
Purchase of New Street Lights	$0.32 per month	NA NA				
Parks Maintenance Fee	$2.93 per month	NA NA				
Temporary Meter (New Construction)	$30.00 per application	NA NA				
New Service (Does not include impact fee)	$25.00 per application	NA NA				
Utility Account Transfer (within City limits)	$15.00 per request	NA NA				
Late Fee on Delinquent Accounts	$10.00 per incident	NA NA				
Request for Re-establishment of Service after Delinquency						
First Occurrence	$35.00 per request	NA NA				
Subsequent Occurrences (Same Year)	$50.00 per request	NA NA				
After Hours Re-connection of Service	$35.00 per request	NA NA				
Deposit for Water Service						
Residential	$75.00 per application	NA NA				
Commercial/Industrial/Multi-Family	$100.00 per application	NA NA				
Culinary Water Service						
Private Pool - Above Ground Permenant	$2.20 per 1,000 gallons					
Commercial Construction (not to be pro-rated)	$2.20 per 1,000 gallons					
Commercial Service						
< 10,000 Gallons	$16.50 per month	NA NA				
10,001-30,000 gallons	$1.65 per 1,000 gallons	NA NA				
30,001-40,000 gallons	$2.05 per 1,000 gallons	NA NA				
> 40,000 gallons	$2.65 per 1,000 gallons	NA NA				
Residential Service (with secondary water)						
< 8,000 Gallons	$16.50 per month	NA NA				
8,001 -15,000 gallons	$2.05 per 1,000 gallons	NA NA				
> 15,000 gallons	$2.45 per 1,000 gallons	NA NA				
Residential Service (without secondary water)						
< 8,000 Gallons	$16.50 per month	NA NA				
8,001 -15,000 gallons	$2.20 per 1,000 gallons	NA NA				
15,001-20,000 gallons	$2.75 per 1,000 gallons	NA NA				
> 20,000 gallons	$4.10 per 1,000 gallons	NA NA				
All Non-Residential Service						
< 8,000 Gallons	$22.50 per month	NA NA				
8,001 -15,000 gallons	$2.20 per 1,000 gallons	NA NA				
15,001-20,000 gallons	$2.75 per 1,000 gallons	NA NA				
> 20,000 gallons	$4.10 per 1,000 gallons	NA NA				
Secondary Water Service (rate based on 3/4" line size flow for any service larger than 1")						
3/4" line	$15.50 per month	NA NA				
1" line	$21.50 per month	NA NA				
1 1/2" line	$58.00 per month	NA NA				
2" line	$103.11 per month	NA NA				
3" line	$184.50 per month	NA NA				
4" line	$412.44 per month	NA NA				

Fee Description	Current Base Fee		Additional Fee		Proposed Base Fee	Proposed Additional Fee	Base Fee Increase	Additional Fee Increase
6" line	$928.00	per month	NA	NA				
8" line	$1,649.78	per month	NA	NA				
Hydrant Meter								
Meter Deposit	$1,200.00	per application	NA	NA				
Administrative Fee	$30.00	per application	NA	NA				
Hydrant Rental								
Short Term (up to 3 days)	$8.00	per applcation	$2.00	per 1,000 gallons				
Long Term (Monthly)	$30.00	per month	$2.00	per 1,000 gallons				
General Use Fee	$2.20	per 1,000 gallons	NA	NA				
Hydrant Flushing	$250.00	per Flushing	$2.18	per 1,000 gallons				
Sewer Service (Waste)								
Residential & Commercial	$14.80	per month	NA	NA				
Sewer Service (Storm)								
Residential	$4.05	per month	NA	NA				
Commercial								
0 - 1 acre	$6.35	per month	NA	NA				
1.1 - 2 acres	$12.75	per month	NA	NA				
2.1 - 2 acres	$19.10	per month	NA	NA				
3.1 - 4 acres	$25.45	per month	NA	NA				
4.1 - 5 acres	$31.80	per month	NA	NA				
5.1 - 6 acres	$38.20	per month	NA	NA				
6.1 - 7 acres	$44.55	per month	NA	NA				
7.1 - 8 acres	$50.90	per month	NA	NA				
8.1 - 9 acres	$57.25	per month	NA	NA				
Each additional acre	$6.35	per month	NA	NA				
Secondary Water - Open Land in a Residential Subdivision	$0.19	sf of pervious area	NA	NA				
Public Works								
Sidewalk & Driveway Approach Replacement	$45.00	per inspection	NA	NA				
Street Sweeping (Contractor failure to clean)	$515.00	per incident	Time & Material for City Personnel					
Fines								
Fines - Water Meter Tampering	$35.00	per Incident	NA	NA				

Fee Description	Current Base Fee	Additional Fee	Proposed Base Fee	Proposed Additional Fee	Base Fee Increase	Additional Fee Increase
Community Center Fees						
Rental - after hours fee for all activities	$10.00 per hour per staff member					
Rental - Gymnasium						
Resident	$100.00 per hour per gym	$500.00 per 8 hours per gym				
Non-resident	$150.00 per hour per gym	$800.00 per 8 hours per gym				
Rental - Classroom/Craft Room						
Resident	$25.00 per hour per room	$160.00 per 8 hours per room				
Non-resident	$45.00 per hour per room	$280.00 per 8 hours per room				
Memberships						
Children (Ages 5-13)						
Resident	$0.50 per day	$5.00 per month or $36 per year				
Non-Resident	$0.50 per day	$8.00 per month or $61 per year				
Youth (Ages 14-17)						
Resident	$1.00 per day	$11.00 per month or $76 per year				
Non-Resident	$1.00 per day	$16.00 per month or $101 per year				
Adults (Ages 18-59)						
Resident	$2.00 per day	$16.00 per month or $101 per year				
Non-Resident	$2.00 per day	$26.00 per month or $181 per year				
Seniors (Ages 60+)						
Resident	$0.50 per day	$5.00 per month or $36 per year				
Non-Resident	$0.50 per day	$8.00 per month or $61 per year				
Seniors Couples						
Resident	n/a per day	$7.00 per month or $56 per year				
Non-Resident	n/a per day	$11.00 per month or $101 per year				
Adult Couples						
Resident	n/a per day	$26.00 per month or $176 per year				
Non-Resident	n/a per day	$46.00 per month or $301 per year				
Familes						
Resident	n/a per day	$51.00 per month or $251 per year				
Non-Resident	n/a per day	$76.00 per month or $401 per year				
Park Rental Fees						
Park Land Rental (Concessionaire)	$250.00 per month	NA NA				
Athletic Fields						
Non-Recreational Play	$25.00 per (4) hour period	$5.00 per hour for 5+ hours				
Resident	$50.00 per field per day	NA NA				
Non-Resident	$75.00 per field per day	NA NA				
Recreational Play	Fee negotiated per Contract	NA NA				
Field Lighting	$30.00 per hour per field	NA NA				
Boweries (except for Jensen and Legacy Parks)						
Bowery Rental Deposit	$50.00 per application	NA NA				
Parties of 150 or Less						
Resident	$25.00 per (4) hour period	$5.00 per hour for 5+ hours				
Non-Resident	$50.00 per (4) hour period	$10.00 per hour for 5+ hours				
Parties of 150 or More						
Resident	$75.00 per (4) hour period	$10.00 per hour for 5+ hours				
Non-Resident	$125.00 per (4) hour period	$20.00 per hour for 5+ hours				
Jensen Nature Park						
Resident	$50.00 per (4) hour period	NA NA				
Non-Resident	$75.00 per (4) hour period	NA NA				
Jensen Park Nature Center						
Resident - 1/2 Day	$125.00 per rental	NA NA				
Resident - Whole Day	$250.00 per rental	NA NA				
Non-resident - 1/2 Day	$175.00 per rental	NA NA				
Non-resident - Whole Day	$350.00 per rental	NA NA				
Legacy Park						
Resident	$50.00 per (4) hour period	NA NA				
Non-Resident	$75.00 per (4) hour period	NA NA				
Cancellation Fee	$5.00 per cancellation	50% within 7 days, no refund under 3 days				

Fee Description	Current Base Fee	Additional Fee	Proposed Base Fee	Proposed Additional Fee	Base Fee Increase	Additional Fee Increase
Heritage Days						
10 x 10 Booth	$75.00 per booth	NA NA				
10 x 20 Booth	$120.00 per booth	NA NA				
Power for Booth	$10.00 per booth	NA NA				
Roving Vendor Permit						
Without a booth rental	$50.00 per permit	NA NA				
With a booth rental	$25.00 per permit	NA NA				
Parade Entry	$10.00 per vehicle					
Late Fee	$15.00 per application	NA NA				
Sports Programs						
Late Sign-up Fee	$5.00 per person	NA NA				
Golf	$56.00 per person	NA NA				
Tennis	$31.00 per person	NA NA				
Football (Tackle)	$116.00 per person	NA NA				
Adult Basketball	$351.00 per team	NA NA				
Soccer (Fall/Spring)						
Resident	$46.00 per person	NA NA				
Non-Resident	$61.00 per person	NA NA				
Baseball/Softball						
T-ball						
Resident	$36.00 per person	NA NA				
Non-Resident	$51.00 per person	NA NA				
Machine Pitch						
Resident	$41.00 per person	NA NA				
Non-Resident	$41.00 per person	NA NA				
Minor League/Major League						
Resident	$46.00 per person	NA NA				
Non-Resident	$61.00 per person	NA NA				
Pony/Ponytail/High School						
Resident	$51.00 per person	NA NA				
Non-Resident	$66.00 per person	NA NA				
Jr High/5th - 6th Girls						
Resident	$51.00 per person	NA NA				
Non-Resident	$66.00 per person	NA NA				
Basketball						
1st-6th grades (Jr Jazz)						
Resident	$51.00 per person	NA NA				
Non-Resident	$66.00 per person	NA NA				
7th-12th grades (Jr Jazz)						
Resident	$56.00 per person	NA NA				
Non-Resident	$71.00 per person	NA NA				
Itty Bitty						
Resident	$36.00 per person	NA NA				
Non-Resident	$51.00 per person	NA NA				
Equipment Rental						
Performance Stage	$900.00 per day					
Cotton Candy Machine	$45.00 per day					
Hot Dog Roaster	$40.00 per day					
Nacho Machine	$40.00 per day					
Popcorn Machine	$45.00 per day					
Inflatables						
20 foot double slide	$150.00 per 4 hours					
Bounce House	$115.00 per 4 hours					
Human Hamster Balls	$125.00 per ball for 2 hours					

Fee Description	Current Base Fee	Additional Fee	Proposed Base Fee	Proposed Additional Fee	Base Fee Increase	Additional Fee Increase
Basic Fees						
Plot Purchase						
Resident	$500.00					
Non-Resident	$1,000.00					
Plot Purchase - half/infant/urn						
Resident	$250.00					
Non-Resident	$500.00					
Interment - Adult						
Resident	$300.00					
Non-Resident	$700.00					
Interment - Child						
Resident	$175.00					
Non-Resident	$400.00					
Interment - Urn or Infant						
Resident	$100.00					
Non-Resident	$200.00					
Interment - Weekend or Holiday						
Resident	$200.00					
Non-Resident	$200.00					
Disinterment						
Resident	$400.00					
Non-Resident	$400.00					
Monument Move (Flat Monument)						
Resident	$50.00					
Non-Resident	$50.00					
Monument Move (Upright Monument)						
Resident	$250.00					
Non-Resident	$250.00					
Position Transfer Fee						
Resident	$35.00					
Non-Resident	$35.00					
After Hours fee (3:00 p.m.)						
Resident	$100.00					
Non-Resident	$100.00					

Public Safety & Public Works

All Fees Are Effective July 1, 2013 Except As Noted (All fees paid with credit card are subject to 1% fee)

Fee Description	Current Base Fee	Additional Fee	Proposed Base Fee	Proposed Additional Fee	Base Fee Increase	Additional Fee Increase
Fire Department						
Ambulance Stand-By Fee (for-profit special events)	$36.00 per hour					
CERT Special Class fee for additional classes requested by organizations outslide of regulary scheduled classes	$200.00 per class					
Equipment issued during CERT Class	$25.00					
Fire Report	$10.00					
Fire Report with pictures	$50.00					
CPR/ First Aid Course						
Resident	$10.00					
Non-Resident	$20.00					
Children's Bike Helmets	$10.00					
Police Department						
Fingerprinting						
Resident	$10.00 per card					
Non-Resident	$15.00 per card					
Police contract services (i.e. special events, interagency, etc)						
Admin Fee - staffing costs	$20.00 per event					
Each officer	$55.00 per hour					
Police Report	$10.00					
Police Report with any pictures/CD/DVD	$50.00					
Good Conduct Letter Request	$5.00 per letter					
Defensive Driving Course ordered by Justice Court	$30.00					
Annual sex offender registration fee			$25.00	Per Registration		
Emergency Services						
Base Fee and Mileage Rate	As per State approved Utah Health Department Rates					
Surcharges (Emergency, night service, off-road)						
Special Provisions (wait time, non-transport)						
Medical Supplies						
Public Works Department						
Public Works contract services (i.e. staffing, capital projects, interagency, etc)						
Staffing costs	$75.00 per hour					
Heavy equipment costs	$100.00 per hour					

Miscellaneous

All Fees Are Effective July 1, 2013 Except As Noted (All fees paid with credit card are subject to 1% fee)

Fee Description		Current Base Fee	Additional Fee	Proposed Base Fee	Proposed Additional Fee	Base Fee Increase	Additional Fee Increase
Faxes							
Local		$2.00 per call	NA NA				
Long Distance		$1.00 per page	$0.10 NA				
Copies							
8 1/2 " x 11" - single sheet B&W		$0.25 per sheet	NA NA				
8 1/2 " x 11" - single sheet Color		$0.50 per sheet	NA NA				
11 " x 17" - single sheet B&W		$0.50					
11 " x 17" - single sheet Color		$1.00					
24" x 36"		$2.00 per sheet	NA NA				
Off-site Printing		Actual Cost	NA NA				
Post Office Supplies							
Stamps, Packages, Boxes, etc.		As per approved USPS prices					
Bubble Wrap		$3.30					
Packing Tape Dispensers		$3.50					
Mailing Carton 12" x 10" x 8"		$2.19					
Mailing Carton 15"x12"x10"		$3.49					
Mlg Ctn 9.0625" x 5.625" x 1.25" (DVD/Video)		$2.59					
Mailing Carton 8" x 8" x 8"		$1.99					
Mailing Carton 5.75" x 5.25" x 1" (CD Mailer)		$2.19					
Photo/Doc Mlr 9.75" x 12.25" (Chipboard)		$1.59					
Cushion Mailer 6" x 10"		$1.19					
Cushion Mailer 8.5" x 12"		$1.59					
Cushion Mailer 10.5" x 16"		$1.89					
Photo/Doc Mailer 6" x 10" (Chipboard)		$1.49					
Photo/Doc Mlr 6.5" x 9.5" Corr-Ins peel adh		$1.69					
Photo/Doc Mlr 9.5" x 12.5" Corr-Ins peel adh		$2.19					
Bubble Mailer 6" x 10"		$1.49					
Bubble Mailer 10.5" x 16"		$2.19					
Bubble Mailer 8.5" x 12"		$1.79					
Bubble Mailer 12.5" x 19"		$2.59					
Envelope 6" x 9"		$0.49					
Utility Mailer 10.5" x 16"		$1.19					
Administrative Reports & Documents							
Financial Report							
First Copy		No Charge per report	NA NA				
Additional		$5.00 per report	NA NA				
Budget Document							
First Copy		No Charge per report	NA NA				
Additional		$5.00 per report	NA NA				
Audio Recordings on CD		$10.00 per CD	NA NA				
Certification of Copies		$2.00 per copy	NA NA				
GRAMA Records Request							
Research, compilation, editing etc.		$0.00 per minute (first 30 min)	$15.00 per hour (31+ minutes)				
Notarization		$5.00 per stamp	NA NA				
Subdivision Ordinance Book							
Entire Book		$15.00 per book	NA NA				
Per Chapter		$1.50 per chapter	NA NA				
General Plan Book		$15.00 per book	NA NA				
Maps (includes Zoning, General Plan, Garbage Pick-up, Master Transportation etc.)							
8 1/2 " x 11"	Size A	$3.00 per map	NA NA				
11" x 17"	Size B	$5.00 per map	NA NA				
17" x 22"	Size C	$8.00 per map	NA NA				
22" x 34"	Size D	$15.00 per map	NA NA				
34" x 44"	Size E	$17.00 per map	NA NA				
Custom		$3.00 per sf	$10.00 Minimum				
Map Research & Compilation		$50.00 per hour					
Maps on disk		$10.00 per disk	NA NA				

Miscellaneous

All Fees Are Effective July 1, 2013 Except As Noted (All fees paid with credit card are subject to 1% fee)

Fee Description	Current Base Fee	Additional Fee	Proposed Base Fee	Proposed Additional Fee	Base Fee Increase	Additional Fee Increase
Collections						
Returned Check Fee	$20.00 per check	NA NA				
Warrant Collection Fee	2.75% of outstanding warrant balance					
Outside Collection Agency Fee	~~33.33%~~ of balance owed to City		25.00%			
Candidate Filing Fee for Public Office	$25.00 per application	NA NA				
City Hall Lobby Rental						
Small Events (< 25 persons - no food present)						
Resident	$50.00 per rental	$0.00 per hour				
Non-resident	$75.00 per rental	$0.00 per hour				
Small Events (< 25 persons - with food present)						
Resident	$100.00 per rental	$35.00 per hour				
Non-resident	$150.00 per rental	$35.00 per hour				
Large Events (> 25 persons - no food present)						
Resident	$300.00 per rental	$35.00 per hour				
Non-resident	$450.00 per rental	$35.00 per hour				
Large Events (> 25 persons - with food present)						
Resident	$300.00 per rental	$35.00 per hour				
Non-resident	$450.00 per rental	$35.00 per hour				
City Hall Chambers Rental						
Small Events (< 25 persons - no food present)						
Resident	$100.00 per rental	$35.00 per hour for staffing				
Non-resident	$150.00 per rental	$40.00 per hour for staffing				
Large Events (< 25 persons - no food present)						
Resident	$300.00 per rental	$40.00 per hour				
Non-resident	$450.00 per rental	$45.00 per hour				
City Hall Lobby and Chambers Rental						
Small Events (< 25 persons - no food present)						
Resident	$150.00 per rental	$35.00 per hour				
Non-resident	$200.00 per rental	$40.00 per hour				
Small Events (< 25 persons - with food present)						
Resident	$200.00 per rental	$40.00 per hour				
Non-resident	$250.00 per rental	$45.00 per hour				
Large Events (> 25 persons - no food present)						
Resident	$350.00 per rental	$50.00 per hour				
Non-resident	$400.00 per rental	$55.00 per hour				
Large Events (> 25 persons - with food present)						
Resident	$450.00 per rental	$55.00 per hour				
Non-resident	$500.00 per rental	$60.00 per hour				

COUNCIL AGENDA

February 11, 2014

Agenda Item **"14"** **Engineering Standards Amendments**

Factual Summation

- Any questions about this agenda item may be directed to: Public Works Director, Robert Whiteley.
- In keeping with the good practice to maintain current engineering standards, we have carefully reviewed our current standards and are recommending a few updates, as summarized.

Roads

1. Standard cross sections and utility locations have been updated.
2. High Density Mineral Bond Seal is the new seal coat standard. Slurry seal is no longer an acceptable form of surface treatment.
3. All sidewalks shall be 6" thick where a site plan is not provided.
4. To meet the minimum International Fire Code Standard, the cul-de-sac radius has been increased from 40 feet to 50 feet to TBC.
5. ADA Ramp detail has been updated to meet current ADA standards.
6. Updated moratorium on roads to match current ordinance.
7. Street Light updated to include induction. A new drawing sheet was added.

Culinary Water

1. Restrained joints are required on all fittings and hydrants.
2. All fire hydrants shall have a Copperhead Industries, LLC Snake Pit 14" Magnetized Tracer Box with blue cast iron top (CHLD14B) installed a minimum of 12" from the front of each fire hydrant. The top of the tracer box shall match the top back of curb elevation. Tracer wire shall be run from the main with the fire hydrant lead and connected to the Test Station.
3. Valve stem risers are required on all culinary valves.
4. All culinary water line 12" and smaller in diameter shall be a minimum of DR-14 C-900.

Secondary Water

1. All secondary water line 12” and smaller in diameter shall be a minimum of DR-14 C-900.
2. Restrained joints are required on all fittings and hydrants.
3. Copperhead Industries, LLC Snake Pit 14” Magnetized Tracer Box with purple cast iron top (CHLD14P) shall be installed at the nearest secondary service to each fire hydrant. The top of the tracer box shall match the top back of curb elevation. Tracer wire shall be run from the main with the service and connected to the Test Station.

Sewer & Land Drain

1. Clarified all sewer manholes shall be vented and stamped “Sewer”.
2. Clarified all land drain manholes shall be non-vented and be stamped “Land Drain.”

Recommendation

- Adopt a resolution with the updates as proposed to the Engineering Standards and Construction Specifications

RESOLUTION NO. R14-10

A RESOLUTION OF THE SYRACUSE CITY COUNCIL ADOPTING UPDATED SYRACUSE CITY ENGINEERING STANDARDS AND CONSTRUCTION SPECIFICATIONS.

WHEREAS, Syracuse City is updating engineering standards and construction specifications; and

WHEREAS, engineering standards and construction procedures, methods, and products have evolved since the current version of Syracuse City Construction Specifications; and

WHEREAS, it is good organizational practice to regularly update Syracuse City Engineering Standards and Construction Specifications due to continual improvements of standards within the construction and civil engineering industries; and

WHEREAS, Syracuse City has an expectation that all new construction, reconstruction, and rebuild of City infrastructure will comply with the current Syracuse City Engineering Standards and Construction Specifications; and

WHEREAS, it is in the City's best interest to develop policies and procedures for regulating and enforcing Syracuse City Engineering Standards and Construction Specifications.

NOW, THEREFORE, BE IT RESOLVED BY THE CITY COUNCIL OF SYRACUSE CITY, STATE OF UTAH, AS FOLLOWS:

Section 1. Syracuse City Engineering Standards and Construction Specifications. The attached document referenced as Exhibit A "Syracuse City Engineering Standards and Construction Specifications" is hereby adopted.

Section 2. Applicability. To the extent that the attached "Syracuse City Engineering Standards and Construction Specifications" modify or conflict with any previous standards or specifications, these standards and specifications shall control. These standards and specifications may be updated by Syracuse City to comply with changes in local, state, and federal law, community needs, and industry practices.

Section 3. Severability. If any provision of this Resolution or its application to any person or circumstance is held invalid, the invalidity does not affect other provisions or applications of this Resolution which can be given effect without the invalid provision or application, and to this end the provisions of this Resolution are severable.

Section 4. Effective Date. This Resolution shall become effective immediately upon its passage.

PASSED AND ADOPTED BY THE CITY COUNCIL OF SYRACUSE CITY, STATE OF UTAH, THIS 11 DAY OF FEBRUARY, 2014.

SYRACUSE CITY

ATTEST:

_____ By:_____

Cassie Z. Brown, City Recorder Terry Palmer, Mayor

EXHIBIT A

(See attached document)

SYRACUSE CITY ENGINEERING STANDARDS AND CONSTRUCTION SPECIFICATIONS

January 2014~~2~~

Updated 2-11-2014, R??-??
Updated 2-14-2012, R12-04

TABLE OF CONTENTS

DIVISION 1: GENERAL REQUIREMENTS....3

DIVISION 2: TRENCH EXCAVATION AND BACKFILL....12

DIVISION 3: CULINARY WATER....19

DIVISION 3A: PRESSURE IRRIGATION....34

DIVISION 4: CONCRETE PIPE....45

DIVISION 4A: PVC PLASTIC PIPE....50

DIVISION 4B: POLYETHYLENE CORRUGATED PIPE....56

DIVISION 5: MANHOLES....61

DIVISION 6: VALVES, COUPLINGS, AND FIRE HYDRANTS....65

DIVISION 7: EARTHWORK....71

DIVISION 8: PORTLAND CEMENT CONCRETE....77

DIVISION 9: REINFORCING STEEL....86

DIVISION 10: RESTORATION OF SURFACE IMPROVEMENTS....89

DIVISION 11: ROADWAY CONSTRUCTION....95

DIVISION 12: CONCRETE SIDEWALK, CURB AND GUTTER....106

DIVISION 13: STORM DRAINS....113

DIVISION 14: SANITARY SEWER / LAND DRAIN....116

DIVISION 15: CASINGS/BORINGS....121

DIVISION 16: POWER, GAS, TELEPHONE AND T.V. CABLE....123

DIVISION 17: SURVEY....124

DIVISION 18: STREET AND TRAIL....127

DIVISION 19: ROADWAY LIGHTING....129

DIVISION 20: UNDERGROUND IRRIGATION SYSTEMS....132

DIVISION 21: PLANTING....146

DIVISION 22: CHAIN LINK FENCING....156

STANDARD DRAWINGS/DEVELOPMENT STANDARDS

DIVISION 1: GENERAL REQUIREMENTS

Section 1.01 PURPOSE OF DOCUMENTS:

The purpose of these Engineering Standards and Construction Specifications is to govern any work done or improvements installed within Public right-of-ways or across easements within the boundaries of Syracuse City. Construction work on infrastructure that is city-owned or shall become owned by Syracuse City shall comply with these standards and specifications, Syracuse City ordinances, master plans, planning, and zoning. Developers/ Contractors shall thoroughly read and understand these specifications and standards before constructing public improvements.

The improvements shall include all street improvements in front of all lots and along all dedicated streets to a connection with existing improvements of the same kind or the boundary of the development nearest the existing improvements. Layout must provide for future extension to adjacent development and be compatible with the contour of the ground for proper drainage. At a minimum, all water lines, subsurface drain lines and any other buried conduit shall be installed to the boundary lines of the development.

The Developer/Contractor shall contact Public Works/Engineering for all matters dealing with construction work within a City right-of-way or with any work connecting onto a City utility. SPECIAL PERMITS AND BONDING ARE REQUIRED FOR ALL SUCH WORK.

Section 1.02 CONSTRUCTION DRAWINGS

Complete and detailed construction plans and drawings shall be submitted to the City for review prior to receiving approval for the development from the City and starting construction. No construction shall be started until plans have been checked and approved by all responsible parties/agencies and written approval has been received from all applicable outside agencies.

Section 1.03 STANDARDS FOR CONSTRUCTION DRAWINGS

The following guidelines are for the purpose of standardizing the preparation of drawings to obtain uniformity in appearance, clarity, size and style.

These plans and designs shall meet the standards defined in the specifications and drawings hereinafter outlined. The minimum information required on drawings is as follows:

A. All drawings shall be clear and legible and conform to good engineering and drafting practices. Size of drawings shall be either 11” x 17” or 24” x 36”. The sheets shall have a minimum of ½” border on top, bottom and right sides. The left side shall have a minimum border of 1½”.

B. In general the following shall be included on all drawings:
   1. North arrow (plan)
   2. Scale (standard engineering scale) not to exceed 100 feet to the inch
   3. Elevations referenced to Davis County Benchmark location
   4. Stations and elevations for profiles
   5. Title block to include:
   6. Name of City
   7. Project title (name of subdivision etc.)
   8. Type and location of work specified

C. Overall site development drawing is required showing layout of entire project and its location in relation to other neighboring properties.

D. Curb and gutter, drains and drainage structures, sidewalks and street surfacing drawings shall show:
   1. Scale (using an appropriate engineering scale)
   2. Vertical scale defined and appropriate for slope and detail required
   3. Profile views of centerline and top back of curb on both sides of the street
   4. Stationing, top back of curb elevations and curve data at back of curb
   5. Flow direction and type of cross drainage structures at intersections with flow line elevations and grades defined
   6. Bench Mark (B.M.) location and elevation (using Davis County datum)
   7. Typical cross-section for all street sizes and classifications

E. Subsurface drain such as land drain and storm drain designs as well as sanitary sewer shall conform to the requirement herein and shall include the following:
   1. Scale (using an appropriate engineering scale)
   2. Vertical scale defined and appropriate for slope and detail required
   3. Location (horizontal and vertical) and slope of main lines
   4. Manhole size, location and elevation
   5. Type and size of main line pipe and laterals
   6. Bench Mark (B.M.) location and elevation (using Davis County datum)
   7. An overall development plan view of the subsurface drains at a scale that shows the entire development with proper detail

F. Culinary and secondary water drawings shall show:
   1. Scale (using an appropriate engineering scale)
   2. Location of main lines (vertical location may need to be shown if there is a potential for high points in the line or interference with other utilities)
   3. Type and size of main line pipe and laterals
   4. Location, size and type of valves, fittings, and hydrants
   5. Location, size and type of specialty equipment (Pressure Reducing Valves, air release/vacuum valves, flush hydrants, drains, pumps, etc.), as necessary
   6. An overall development plan view of the culinary and secondary water at a scale that shows the entire development with proper detail

G. Grading and Drainage shall include:
   1. Scale (using an appropriate engineering scale)
   2. Overall project limits showing property and lot lines
   3. Street names
   4. Existing contours with associated elevations labeled at one-foot intervals
   5. Final contours at completion of construction with associated elevations labeled at one-foot intervals
   6. Bench Mark (B.M.) location and elevation (using Davis County datum)
   7. Detention basin and associated structures with supporting calculations for volume and orifice
   8. Location of percolation test pits, wells, or groundwater monitoring sites
   9. Watercourses in open channels and open bodies
   10. Wetland areas and sensitive overlay zones
   11. Label constructed surface slopes with direction of flow and slope percent ensuring positive drainage into collection facilities with no surface drainage crossing through private property
   12. All grading and drainage designs must support geotechnical study recommendations or city standards whichever is greater.

H. Landscape plans shall be required for all site plans and for developments with open space shared by public or private affiliations. Landscape plans shall be stamped by a Landscape Architect currently licensed to practice in the State of Utah. The landscape plan shall include:
   1. Scale (using an appropriate engineering scale)
   2. Connection to irrigation main with valve box and pipe size
   3. Irrigation piping layout with valves, heads, pipe sizes, filters
   4. All surface treatments, such as topsoil, fabric, mulch, grass, rock, etc
   5. Trees and plantings
   6. Fence material, style, height, and location
   7. Edging such as concrete mow strip, polyethylene, brick, rock, etc
   8. Open watercourses
   9. Parking areas
   10. Walkways such as paths, trails, and sidewalks
   11. Lighting
   12. Amenities such as athletic field structures, playground, picnic, restrooms, and maintenance

I. Details for all structures to be constructed may need to be on a separate sheet. The detail sheet shall conform in every way to the Standards and Specifications of Syracuse City and shall be drawn to scale, complete with dimensions, labels, and notes.

A minimum of three full size copies of the construction plans and one electronic pdf shall be submitted to the city for each review/approval. The final approved construction set must be submitted to the city (three full size and one electronic pdf) prior to construction commencement. The City will retain two approved copies and one approved set will be returned to the developer. This approved set shall be kept available at the construction site. Prior to acceptance of the improvements the developer shall submit to the City a record set of drawings for review and approval. One full size reproducible set of record drawings and an electronic pdf version of the construction drawings must be submitted to the City. Such record set shall contain record information that reflects any corrections, measurements, notes, changes, and updates made to the plans during construction.

Section 1.04 PERMITS, FEES AND BONDING REQUIRED:

It shall be unlawful to do any construction, excavation work on any street, curb, gutter, sidewalk, sewer line, water line, pressure irrigation line, storm drain, land drain, or other infra-structure addition or improvement in Syracuse City without a Public Works' permit from the City to do so. Syracuse City and all utility companies are bound by these standard specifications. No work shall be started until a permit is secured. In order to obtain a Public Work's Permit, the Developer's/Contractor's authorized signature is required. If a contract to do such work for the City has been finalized, the contract fulfills the permit requirement.

Sub-section A. All Public Works' permit applications shall include:

- Start and completion dates of the project.
- The exact address or location of the work to be done.
- The type of work to be done.
- A detailed drawing of the work to be performed.
- A request for all utility companies to be contacted through Blue Stakes 1-800-662-4111 or 811.
- A traffic control plan
- Insurance
- A copy of the contractor's license
- Bond

Sub-section B. Before a permit is issued by the City, an application to the City must be filed and a permit fee and an inspection fee shall be paid to the City. These fees will be set by Council resolution. Fees shall be assessed on the following items:

- Inspection Costs
- Re-inspection (When an inspection has been requested, the inspection is performed and the work is not complete, a re-inspection fee shall be assessed.)
- Sewer and Water Lateral Installation Inspection (Applies to those not covered by Building Permit)
- Pressure irrigation service connection.
- Bond or improvement acceptance
- The decreased life expectance of the roadway based upon roadway damage.

All public improvement projects done for Public Works shall be bonded. Each contractor doing work in the City is required to maintain a $5000.00 bond with the City which shall remain in effect two years following the completion of all work on the project. Bond requirements are to guarantee the following:

(1) Construction work is completed.
(2) Final inspection is conducted.
(3) Repairs and/or replacement of required public improvements are finished and accepted.

Cash bonds for a one-time permit will be calculated based on the estimated cost of street repairs plus 10% or $5,000.00, whichever is greater.

The bonds shall be in the form of a bond from a surety company or a cash bond paid directly to the City. The City shall approve all bonds submitted. No bond shall be released until all improvements are completed and accepted by the City.

Section 1.05 CONTRACTOR AND CONSTRUCTION PLAN APPROVAL:

Before a Contractor performs any work within the City, the City shall approve the Contractor. Approval is granted for a period of one (1) year upon submission of one of the following:

- A current Utah State Contractor's License or Franchise Agreement. (Work will be restricted to that authorized by the license.)
- Proof of comprehensive general liability insurance. Bodily injury insurance will be in an amount of not less than three hundred thousand dollars ($300,000.00) for any one occurrence. Property damage insurance will be in an amount of not less than two hundred thousand dollars ($200,000.00) for any one occurrence and shall include underground exposure. Combined liability insurance will be in an amount of not less than five hundred thousand dollars ($500,000.00) for any one occurrence.
- A performance bond, which will be 20% of the costs of construction, will be owed to the City, that will be in effect for a period of one (1) year or one (1) year after the completion of work performed by the contractor, whichever is greater.

The Community Development Department shall approve construction plans and cut sheets before any work begins. Developers/Contractors proceeding with work without such approvals shall have the project shut down until such approvals are obtained. Repeated offenses may result in the Contractor losing its pre-qualification to perform work in the City.

Section 1.06 PRE-CONSTRUCTION CONFERENCE:

A pre-construction meeting with the Developer and the Contractor(s) involved in the subdivision construction shall be held with the Public Works Director/Engineer prior to commencement of any work. The location of the meeting shall be either on the project site or at the Syracuse City Public Works Building: 3061 South 2400 West, Syracuse, Utah 84075. The following items shall be furnished at the meeting:

A. A detailed outline showing the sequences of construction of principle items of work. The outline shall show the beginning and ending dates of the major items of work on the Project.

B. A list of names, titles, addresses, and telephone numbers of the Developer/Contractor's responsible personnel, indicating those who may be reached outside normal working hours.

C. A list of Sub-Contractors and Materials Suppliers to be involved with the project and the items of work they are going to perform or furnish materials for. The City will notify the Developer/Contractor of any concerns or pre-qualification deficiencies of the companies they plan to use.

Other items may be discussed at this pre-construction conference as determined by the Public Works Director/ Engineer. Official minutes of this meeting as prepared by the Public Works Director/Engineer shall become part of the project file for the project.

Section 1.07 TIMELY COMPLIANCE WITH THE ISSUED PERMIT:

The Developer/Contractor shall perform in accordance with the terms of the permit and the Standard Specifications and Standard Drawings in effect at the date of the permit. The work shall be done in a timely manner. Time limits may be a condition of the permit and may be shortened because of safety concerns. Permits may be suspended if compliance is not met.

Sub-section A. Inspections:

All work covered by a Public Works' permit shall be inspected by the Public Works Director prior to the following:

(1) Backfilling and compacting.
(2) Placing concrete and asphalt
(3) Placing any underground piping
(4) Making any connection into a city utility line
(5) Other work done in a public right of way.

Public Works shall also be notified prior to starting any Public Works project.

Sub-section B. <u>Notification of Needed Inspections:</u>

The Contractor shall request inspections forty-eight (48) hours in advance. Inspections are done on regular working days during the regular work hours of the City.

A charge shall be assessed for inspection callbacks.

Sub-section C. Responsibility of the Developer:

The developer is responsible for the complete development, including construction of the entire subdivision and any necessary off-site improvements, until it is finalized and accepted by the City.

Sub-section D. Definition of "Public Works Director/Engineer":

The term "Public Works Director/Engineer" as used in these specifications refers to the Public Works Director, Public Works Inspector, City Engineer, Public Works staff and others as designated by the Public Works Director.

Sub-section E. Conflict:

These Standard Specifications and Standard Drawings are the minimum requirements of Syracuse City. In the event that any provisions herein conflict with general industrial standards, or with other requirements specified by the City, the more stringent of the standards will apply.

Section 1.08 ELECTRONIC AND RECORD DRAWINGS:

At the completion of the project, plat and improvement drawings shall be furnished electronically in Portable Document File (PDF) format and in a computer-aided drafting file format such as MicroStation (.dgn), AutoCAD (.dwg) or Data Exchange Format (.dxf).

After completion of all public works improvements the Developer shall provide the City (Community Development Department) with a set of reproducible (mylar) "record drawings" which have been corrected and certified by the design engineer and a licensed Utah Land Surveyor to show the constructed improvements. Final payment from the bond shall not be made until these records are received and record drawing accuracy is verified.

Section 1.09 TEMPORARY SERVICES:

Any temporary services and utilities such as telephone, electrical, water toilet facilities, etc., shall be the responsibility of the Developer/Contractor.

Section 1.10 CODES AND STANDARDS:

Where codes and standards are referred to they shall be current, approved copies. It shall be the duty of the supplier of any material on this work to submit evidence, if requested, that its material is in compliance with the applicable codes and standards.

Section 1.11 STATE AND LOCAL LAWS:

The Developer/Contractor shall conform to all applicable state and local laws in carrying out its obligations under the Contract.

This shall include, but is not limited to, compliance by the Developer/Contractor with the requirements of Chapter 30, of Title 34, of the Utah Code Annotated, 1953 as Amended. If the provisions of Section 34-30-1, of the Utah Code Annotated, 1953 as amended, are not complied with, this Contract shall be void.

Section 1.12 COMPLIANCE WITH GOVERNMENTAL REGULATIONS:

The Developer/Contractor's personnel, equipment, and operations shall comply fully with all applicable standards, regulations, and requirements of existing Federal, Utah State, and Local governmental agencies. This shall include, but not necessarily be limited to, the following:

Sub-section A. United States Occupational Safety and Health Administration Regulations:

Title 29 of the Code of Federal Regulations, Part 1926 (29 CFR Part 1926), Safety and Health Regulations for Construction.

Sub-section B. Utah State Industrial Commission Regulations:

The Utah Occupational Safety and Health Act (1973) and Employer-Employee Safe Practices for Excavations and Trenching Operations (Jan. 1, 1974), as published by the Utah State Industrial Commission, including any and all amendments or revisions effective prior to performance of the work.

Sub-section C. City Ordinances:

The Developer/Contractor shall be required to comply with all Syracuse City Ordinances.

Sub-section D. UDOT Requirements:

When crossing or working within Utah Department of Transportation rights-of-way the Developer/Contractor shall be responsible to obtain all necessary permits and comply with all appropriate UDOT regulations including applicable sections in "State of Utah Standard Specifications for Road and Bridge Construction," latest edition.

Work to be performed within UDOT rights-of-way shall be done in accordance with "SPECIFICATIONS FOR EXCAVATION ON STATE HIGHWAY RIGHT-OF-WAY", latest revision. The Developer/ Contractor shall be responsible to obtain all necessary permits and meet any bond requirements imposed by that agency.

The Developer/Contractor will pay UDOT fees for any UDOT inspectors.

Sub-section E. Permits:

The Developer/Contractor is responsible to obtain all required business licenses and building permits applicable to this project. Developer/Contractor shall be subject to the conditions of all development approvals, excavation permits and agreements between the Owner and the permitting agencies. Permits shall include the State of Utah General Construction Storm Water Permit as required.

Section 1.13 FEDERAL, STATE, AND LOCAL INSPECTING AGENCIES:

The site of construction is to be open at all reasonable times and places for periodic observation by accredited representatives of the Federal, State, and local agencies who have regulatory or supervisory authority over any part of the work proposed or regulated thereto.

Section 1.14 PUBLIC SAFETY AND CONVENIENCE:

The convenience of the general public and the protection of persons and property are of prime importance and shall be provided for by the Developer/Contractor during this project. The Developer/Contractor shall use every reasonable precaution to safeguard persons and property. Failure of the Owner or the Public Works Director/ Engineer to notify the Developer/Contractor of any deficiencies in providing for public safety and convenience shall not relieve the Developer/Contractor from its responsibility. The Developer/Contractor shall be required to comply with the requirements of the latest edition of the **Manual on Uniform Traffic Control Devices (MUTCD)**.

Sub-section A. Compliance with Rules and Regulations:

The Developer/Contractor shall comply with all rules and regulations of the City, County, and State authorities regarding the closing of public streets, or highways, to the use of public traffic. If conditions justify, the Public Works Director/Engineer may authorize the Developer/Contractor to close general traffic to not more than one (1) city block at any given time. No such closure shall be made without authorization of the Public Works Director/Engineer. Closure of streets or highways shall be in conformance with the **(MUTCD)**.

Sub-section B. Road Closures and Obstructions:

No road shall be closed by the Developer/Contractor to the public except by express permission of the Public Works Director/Engineer. The Developer/Contractor shall, at all times, conduct its work so as to ensure the least possible obstruction to traffic and normal commercial pursuits. Road closed for construction activities during normal daytime working hours shall be open for public traffic once daytime construction activities have ceased. Such road openings shall provide for the safe conveyance of public traffic through such construction zones.

Sub-section C. Protection of the Traveling Public:

All obstructions within traveled roadways shall be protected by signs, barricades, and lights where necessary for the safety of the traveling public. All barricades and obstructions shall be protected at night by signal lights which shall be suitably distributed across the roadway and kept burning from sunset to sunrise. Barricades shall be of substantial construction. Failure of the Owner or the Public Works Director/Engineer to notify the Developer/Contractor to maintain barricades, barriers, lights, flares, danger signals, or guards shall not relieve the Developer/Contractor from its responsibility.

Sub-section D. Hazardous Conditions:

Whenever the Developer/Contractor's operations create a hazardous condition, it shall furnish flaggers and guards to give adequate warning to the public of any dangerous conditions to be encountered. It shall furnish, erect, and maintain fences, barricades, signs, lights, and other devices that may be necessary to prevent injury and damage to persons and property. Flaggers and guards shall be UDOT trained and shall hold current certification and shall be equipped with signs, flags, etc. as required by the Utah State Department of Transportation (UDOT) regulations.

Sub-section E. Dust and Debris Control:

The Developer/Contractor shall control dust and debris that originates in the construction right-of-way or site. Dust, trash, and other debris shall be controlled on a daily basis by methods that shall include, but not be limited to, the use of a dust setting spray, a "pick-up broom or street sweeper and trash disposal. When conditions warrant and at the sole determination of the City, the Developer/Contractor shall maintain on the project site a water truck. The Developer/Contractor shall be responsible to secure a source of water and shall obtain the necessary permission for its use. Failure by the Developer/Contractor to adequately control dust and debris may result in the City initiating dust and debris control measures and deducting the cost from payment due to the Developer/Contractor. The Developer/Contractor shall be responsible for all trash and or debris removed from site, not buried, or disposed of improperly – as determined by the Public Works Director/Engineer.

Section 1.15 CONFINEMENT OF WORK AND ACCESS TO RIGHT-OF-WAY AND EASEMENTS:

The Developer/Contractor will be required to confine construction operations within the dedicated right-of-way for public thoroughfares or within areas for which construction easements have been obtained unless it has made special arrangements with the affected property owners in advance. The Developer/Contractor will be required to protect stored materials, lawn, trees, and other features located adjacent to the proposed construction site. During construction operations, the Developer/Contractor shall construct and maintain such facilities as may be required to provide access by all property owners to their property. No person shall be cut off from access to their residences or places of business for a period exceeding eight (8) hours, unless the Developer/Contractor has made special arrangements with the affected persons prior to commencing work in the area.

Section 1.16 NOTIFICATION OF RESIDENTS:

All property owners and residents adjacent to the streets or easements affected by the construction shall be notified by the Developer/Contractor at least forty-eight (48) hours in advance of time construction begins. The Developer/Contractor can satisfy this requirement by placing a written notice on the door of each residence or

business having sufficient information. The message and format of the notice shall be approved by the City at the Pre-construction Conference.

Section 1.17 WEATHER CONDITIONS:

In the event of temporary suspension of work, or during inclement weather, the Developer/Contractor will, and will cause its Sub Developer/Contractors to, protect any project work or materials against damage from the weather. If, in the opinion of the Public Works Director/Engineer, any Project work or materials become damaged by reason of failure on the part of the Developer/Contractor or any of its Sub Developer/Contractors to so protect its work, such work or materials shall be removed and replaced at the expense of the Developer/Contractor.

Section 1.18 LAND MONUMENTS:

The Developer/Contractor shall preserve existing City, County, State, and Federal land monuments whenever possible. When these monuments cannot be preserved, the Developer/Contractor shall notify the Public Works Director/Engineer at least two (2) weeks in advance of the proposed construction in order that the Public Works Director/Engineer will have ample opportunity to reference these monuments for later replacement.

Section 1.19 SOURCE OF MATERIALS:

All materials furnished or incorporated in this project shall conform to the requirements of these Specifications.

The Developer/Contractor shall acquire the necessary rights, at its own expense, to take material from aggregate sources and to use properties for plant site, hauling roads, and other purposes.

The Developer/Contractor may select areas for disposal of surplus materials; however, the Developer/Contractor will be responsible for acquiring the necessary right, at its own expense, to use the property for such purpose. Such surplus materials disposed may be subject to state storm water permitting requirements.

Section 1.20 OPERATION AND MAINTENANCE MANUALS:

The Developer/Contractor shall furnish the Public Works Director/Engineer with two (2) sets of all operation and maintenance manuals, drawings, diagrams, etc., for all pumps, motors, control panels, valves, meters, etc., for use in the Operation and Maintenance Manual.

Section 1.21 INTERFERING STRUCTURES, UTILITIES AND FACILITIES:

The Developer/Contractor shall exercise all possible caution to prevent damage to existing structures and utilities, whether above ground or underground. While these structures and utilities may be shown on the improvements plans, the information has been compiled from the best available sources, its completeness and accuracy cannot be guaranteed, and it is presented simply as a guide to possible difficulties. The Developer/Contractor shall notify all utility offices concerned at least forty-eight (48) hours in advance of construction operations in which a utility agency's facility may be involved. Notification to blue stakes does not necessarily cover all buried lines. This shall include, but not be limited to, irrigation, water, telephone, electric, sewer, storm drain, gas, and cable television. The Developer/Contractor shall be responsible for any and all changes to, relocation of, or re-connection to public utility facilities encountered or interrupted, which could have been reasonably foreseen, during the prosecution of the work. All costs relating thereto shall be at the Developer/Contractor's expense.

It shall be the responsibility of the Developer/Contractor to expose all existing underground structures and utilities in such a manner as to prevent damage to the same. Any structure or utilities damaged by the Work shall be repaired or replaced at the Developer/Contractor's expense. Any such repairs or replacements made shall be approved by owner of structure and inspected and accepted by Owner.

If the Developer/Contractor encounters existing structures that will prevent construction, it shall notify the Public Works Director/Engineer before continuing with the construction in order that the Developer’s Engineer or Public Works Director/Engineer may make such field revisions as necessary to avoid conflict with the existing structures.

Section 1.22 MATERIAL AND COMPACTION TESTING:

It shall be the responsibility of the Developer/ Contractor to test all materials used during construction to ensure they meet city specifications. During the course of the work, a Geotechnical Engineer/Testing Company shall perform such tests as are required to identify materials, to determine gradation, to determine compaction characteristics, to determine moisture, to determine density of fills in place, to determine concrete strength, to determine density and mixture of asphalt. The city reserves the right to randomly test to verify that the construction conforms to the requirements of the specifications. Such tests are not intended to provide the Developer/Contractor with the information required by it for the proper execution of the work and their performance shall not relieve the Developer/Contractor of the necessity of completing the construction in accordance with these specifications and Standard Drawings.

The estimated cost of such testing will be included in the Developer's bond posted with the City. The Developer shall contract with a geotechnical or certified testing company to perform the necessary tests. Such tests shall be accomplished under observation by the City. The City reserves the right to perform additional spot check tests as deemed necessary by the Engineer.

Section 1.23 UNDERGROUND PIPE INSPECTIONS

Prior to the City accepting newly constructed storm sewers or land drains the Contractor/Developer must provide the City with a recording of the televising of the sanitary sewer, storm sewer, and land drain (performed in the presence of the Public Works Director). The Contractor/Developer shall pay the cost of the televising the sewer. All conduits must be cleaned and flushed prior to televising. The televising equipment must record a continuous distance from the point of beginning.

Work conducted on the sanitary sewer, storm sewer, and land drain lines which shall be owned and/or operated by the City or others shall meet their requirements regarding materials, inspection and subsequent acceptance.

DIVISION 2: TRENCH EXCAVATION AND BACKFILL

Section 2.01 GENERAL:

This section covers the requirements for trenching and backfilling for underground pipelines. Unless otherwise shown or ordered, pipe shall be laid in an open trench. All incidental clearing, preliminary grading, structure removal, and benching shall be considered a part of the trenching operation.

Excavation of trenches for pipe lines shall include the excavation of all materials, of whatever nature, except pavement, coming within the designated lines of the trenches, as hereinafter described. It shall include the excavation of all materials required for the construction of manholes, flush tanks, cleanout boxes, meters, pressure regulators and other appurtenances as shown on the drawings or directed by the engineer. It shall include all excavation required for the removal or lowering of existing pipe lines or appurtenances and shall include all necessary clearing and grubbing, all necessary draining, pumping, timbering, sheeting and subsequent removal of these materials as directed by the inspector. It shall include the disposal of all material excavated and the backfilling of the trenches and appurtenant structures as hereinafter provided. No tunneling will be permitted unless permission is given in writing by the Inspector.

Section 2.02 BARRICADES:

Barriers shall be placed at each end of all excavations, and at such places as may be necessary along excavations, to warn all pedestrians and vehicular traffic of such excavations. Lights shall also be placed along excavations from one hour before sunset each day to one hour after sunrise of the next day; including weekend and holidays, until such excavations are entirely refilled, compacted, and surfaced or final graded. All excavations shall be barricaded in such a manner as to prevent persons from walking into, falling into, or otherwise entering those excavations.

Section 2.03 BLASTING:

Blasting will not be allowed except by permission from the Public Works Director/Engineer. The Developer/ Contractor shall comply with all laws, regulations, ordinances, and safety codes relative to the handling, storage, and use of explosives. The Developer/Contractor shall be fully responsible for all damage to life and property attributable to its blasting operations. Excessive blasting or overshooting will not be permitted. The Developer/ Contractor shall remove any material outside the authorized cross section, which may be shattered or loosened by blasting.

Section 2.04 SHEETING, BRACING AND SHORING OF EXCAVATIONS:

Excavations shall be sheeted, braced, and shored as required to support the walls of the excavations. These measures shall be taken to protect the workers, the work in progress, existing utilities, structures, and improvements, from damage due to sliding and settling of trench walls. All such sheeting, bracing, and shoring shall comply with the regulations of the Utah State Industrial Commission, the United States Occupational Safety and Health Administration (OSHA), and accident prevention and safety provisions of the Contract.

The Developer/Contractor shall be fully responsible for the adequacy of methods and materials used in trench sheeting, bracing, shoring, and other systems provided to protect workers. Injury to or death of workers resulting from inadequate trench safety measures shall be the full and complete responsibility of the Developer/Contractor. All damages resulting from lack of adequate sheeting, bracing and shoring shall be the responsibility of the Developer/Contractor, and the Developer/Contractor shall affect all necessary repairs or reconstruction at its own expense resulting from such damage.

Sheeting or shoring that does not extend below the centerline of the pipe may be removed at the discretion and responsibility of the Developer/Contractor after the pipe embedment has been placed and compacted to a level twelve inches (12") above the top of the pipe. Following removal of the sheeting or bracing, the trench shall be immediately backfilled and compacted or consolidated.

Section 2.05 CONTROL OF GROUNDWATER:

All trenches shall be kept free from water during excavation, fine grading, pipe laying and jointing, and pipe embedment operations. Where the trench bottom is mucky or otherwise unstable because of the presence of groundwater, and in all cases where the static groundwater is above the bottom of any trench or bell hole excavation, such groundwater shall be lowered to the extent necessary to keep the trench free from water and the trench bottom stable when the work within the trench is in progress. The discharge from excavation dewatering shall be conducted to natural drainage channels, gutters, drains, or storm sewers. Measures should be taken to not discharge silts and fines or any other pollutant into the storm drain system. No sanitary sewer shall be used for disposal of trench water. Surface water shall be prevented from entering trenches.

Section 2.06 TRENCH EXCAVATION:

Excavation for pipelines shall be located as shown on the Drawings or as staked in the field. Trenches shall be excavated to the depths and widths required to accommodate the construction of the pipelines, as follows:

Sub-section A. Utility Protection:

All water, gas, sewer or other pipes encountered in excavating for the trench or appurtenances shall be supported and protected from injury in a manner satisfactory to the inspector.

Sub-section B. Normal Excavation:

Except in ledge-rock, cobbles, stones, or water-saturated earth, mechanical excavation of trenches shall not extend below the bottom of the pipe after placement in its final position. All additional excavation necessary for preparation of the trench bottom shall be made manually.

Sub-section C. Authorized Over-Excavation:

Where ledge-rock, cobble rock, stones or other material render the trench material unsuitable for pipe bedding, as determined by the Public Works Director/Engineer, bedding material shall be imported and placed. The trench shall be excavated to a minimum of four-inches (4”) below the bottom of the pipe after placement in its final position.

Where unstable material is encountered in the excavation, foundation material may be required, as determined by the Public Works Director/Engineer. In such cases, a minimum of eight inches (8") below the bottom of the pipe after placement in its final position shall be removed. Over-excavation not ordered, specified, or shown shall be considered to be unauthorized excavation.

Excavation in Rock and Hard Pan. If the bottom of the trench for any pipeline is in rock or in material too hard to permit the bed to be properly formed for the pipes, the excavation shall be made not less than 4 inches below the established subgrade, and the bottom of the trench shall be brought to subgrade with approved material compacted into place as ordered by the Inspector. The subgrade for all pipeline trenches is hereby defined to be the bottom of the trench at the elevation of the outside bottom of the pipe.

Excavation Other than Rock. Where the bottom of the trench is composed of material other than rock, care shall be exercised to prevent any disturbance of the material beyond the prescribed lines, and if any material is so disturbed, it shall be tamped back into place in a manner satisfactory to the Inspector.

Undesirable Material. If any undesirable material is encountered in the bottom of the trench, the contractor shall make such additional excavation as the inspector may direct, and shall replace it with gravel of a quality that will pack, and said gravel shall be tamped into place in 4-inch layers to the satisfaction of the Inspector.

Sub-section D. Unauthorized Over-Excavation:

Any excavation carried below the elevation required to install the pipe as specified in these Specifications, or directed by the Public Works Director/Engineer, shall be considered to be unauthorized. Such excavation shall be backfilled in accordance with these Specifications, all at the Developer/Contractor's expense.

Sub-section E. Trench Width:

The trench shall be excavated such that the pipe is always centered in the trench. The minimum clear trench width at the horizontal diameter of the pipe must not be less than the outside diameter of the pipe plus twelve inches (12").

Trench width for pipeline structures, valves, or other accessories shall be sufficient to leave at least twelve inches (12") clear between their outer surfaces and the trench. Backfill with earth under structures or valves will not be permitted. Any unauthorized excess excavation below the elevation indicated for foundation of any structures shall be backfilled in accordance with this Specification regarding Trench Backfill, at the Developer/Contractor's expense.

The sides of the trench shall be vertical and the depth of the trench shall be measured from the existing ground surface to the subgrade of the trench, provided that on paved streets the depth shall be measured from the bottom of the pavement to the subgrade of the trench. Additional excavation required for manholes, vaults, cleanout boxes, meter boxes, valve boxes, pressure regulators and other appurtenances shall be made as described in these Specifications; provided, however, that the measurement of additional excavation shall include only such additional material as is required beyond the designated lines of the trench.

Sub-section F. Fine Grading the Trench Bottom:

The bottom of the trench shall be accurately graded and prepared to provide uniform bearing and support on undisturbed soil or compacted granular bedding at every point along the entire length of the pipe. Bell holes shall be hand excavated after the trench bottom has been fine graded. Bell holes shall be only large enough to permit making the joints and to assure that any portion of the joint or bell does not support the pipe.

Sub-section G. Trenches in Embankments:

Before laying pipes that are to be in fill or embankment areas, the embankment shall first be placed and compacted to the specified density to a depth of not less than two feet (2') above the top of the proposed pipe. After placing and compacting the embankment, the trench for the pipe or conduit shall be excavated through the fill and fine graded and the pipe installed as specified.

Sub-section H. Placement of Excavated Material:

All excess material shall be hauled away from the construction site and disposed of in an area obtained by the Developer/Contractor and approved by the Public Works Director/Engineer. The Developer/Contractor shall be responsible for all rights-of-way, easements, and access associated with the disposal of excess excavated material. It shall further be responsible to obtain permission from the property owner or person controlling the property where the Developer/Contractor plans to dispose of excavated material. No compensation will be made to the Developer/Contractor for disposal of excess excavated material.

Non-excess excavated material shall be piled in a manner that will not endanger the work and will avoid obstructing sidewalks and driveways. Gutters and irrigation ditches shall be kept clear or other satisfactory provisions shall be made for street drainage and continuity of irrigation.

Grading of the area surrounding the trenches, including excavated materials, shall be performed as necessary to prevent surface water from flowing into trenches, or other excavations. Control of groundwater shall be as specified in these Specifications regarding Control of Groundwater.

Section 2.07 TRENCH BACKFILL

Trench backfill for piping consists of four zones: foundation, bedding, initial backfill, and final backfill. "Pipe embedment" is a commonly used term that refers to the region including the bedding and initial backfill zones, or any region within one foot (1') of any pipe, pipeline structure, or accessory. The foundation is defined as the region between eight inches (8") and four inches (4") below the bottom of the pipe. The bedding is defined as the region between four inches (4") below the bottom of the pipe and the bottom of the pipe. The initial backfill is defined as the region between the bottom of the pipe and twelve inches (12") above the top of the pipe. The final backfill is defined as the region further than twelve inches (12") above the pipe.

The Public Works Director/Engineer shall determine the suitability of excavated materials for use as foundation, bedding, initial backfill, and final backfill. When the native excavated materials are not satisfactory for foundation, bedding, or backfill, the Developer/Contractor shall provide imported granular material. All fill materials shall be compacted as specified in this section.

All backfill operations shall be completed within ten (10) calendar days from the starting of excavation. Unless otherwise approved by the Engineer.

All backfill material shall be free from cinders, ashes, refuse, organic and frozen material, boulders, stones, or other material that, in the opinion of the City Engineer, is unsuitable.

Backfill material under, around, and to one foot over the pipe shall consist of select earth, sand or fine gravel, free from clods, lumps or stones larger than 1 1/2-inches to their maximum dimensions. This shall be limited to 3/4" maximum around PVC, ABS or polyethylene lines. In wet or unstable conditions, material in this zone shall be free draining, non-plastic material.

Backfill under and around the pipe to the centerline shall be placed in maximum layers of 6-inches. Bell holes of ample dimensions shall be dug in the bottom of the trench for each pipe. Uniform bearing for each pipe barrel shall be provided for the full length of each pipe. Backfill from the centerline to one-foot above the pipe shall be placed and compacted in maximum layers of 6-inches. Backfilling under improved areas (such as paved streets) shall be placed and compacted in 6-inch layers. All layers through improved areas will be compacted to not less than ninety-six (96%) of the maximum Standard Proctor Density (T-99). Only in the zone from one-foot above the pipe to finished subgrade under unimproved areas will the use of wheel compaction be allowed. Adequate testing by the contractor shall be required to satisfy compaction requirements.

Impervious backfill shall be required at irrigation canal crossings or other waterway interferences.

Sub-section A. <u>Imported Granular Material:</u>

Imported granular material for foundation, bedding, and backfill shall be cleaned crushed rock or gravel, free from sod, vegetation, and other organic or deleterious material. Slag will not be allowed in the pipe embedment. Imported granular material shall conform to the following gradation specifications:

1. **Foundation Material.** One hundred percent (100%) less than two-inch (2") and maximum of five percent (5%) less than one-half-inch (1/2").

2. **Embedment & Initial Backfill Material.** Ductile-iron pipe - One hundred percent (100%) less than one and a half inch (1-1/2") and maximum of five percent (5%) passing a No. 200 sieve.

PVC or polyethylene pipe - One hundred percent (100%) less than three-quarter inch (3/4") and maximum five percent (5%) passing a No. 200 sieve.

Concrete pipe - One hundred percent (100%) less than one and a half inch (1-1/2") and maximum of five percent (5%) passing a No. 200 sieve.

3. Final Backfill Material. One hundred percent (100%) less than four-inch (4"), maximum of fifty percent (50%) passing a No. 10 sieve, maximum of thirty percent (30%) passing a No. 40 sieve, and maximum of fifteen percent (15%) passing a No. 200 sieve.

Sub-section B. Foundation Placement:

When over-excavation is authorized by the Public Works Representative/Engineer, foundation material shall be placed in the foundation zone and below. The foundation material shall be placed so that the trench can be properly fine graded as specified. The foundation material shall be deposited over the entire trench width and compacted in layers. The layers shall have a maximum uncompacted thickness of six-inches (6"). The material shall then be fine graded in accordance with the specification for Fine grading herein.

Sub-section C. Pipe Embedment:

Native embedment material shall conform to the general requirements Specified herein for imported granular material, and may include excavated materials consisting of loose earth, sand, or gravel having no material larger than two-inches (2") in any dimension. For PVC pipe, the material must be no greater than three-quarter inch (3/4") in any dimension. If the excavated materials are not satisfactory, the specified imported granular material shall be used for pipe embedment.

1. Bedding. The bedding material shall be deposited over the entire trench width to a compacted thickness of no less than four inches (4"). The material shall have a maximum uncompacted thickness of six inches (6").

2. Initial Backfill. After the pipe is in place, initial backfill material shall be placed at any point below the mid-point of the pipe simultaneously and uniformly on both sides of the pipe in un-compacted layers not to exceed ten-inches (10") or one-half the diameter of the pipe, whichever is less. Initial backfill material shall be placed with care to prevent displacement of or damage to the pipe during the embedment process. Initial backfill material shall be scattered alongside the pipe and not dropped into the trench in compact masses. That section of the pipe zone from the mid-point of the pipe to twelve inches (12") above the top of the pipe shall then be filled with initial backfill materials and compacted.

Sub-section D. Final Backfill:

Final backfill shall be from twelve inches (12") above the top of the pipe to the level shown on the Drawings. Excavated materials consisting of fines, sand, and gravel shall be used for final backfill. No oil cake, bituminous pavement, concrete, rock, or other lumpy material shall be used in the final backfill unless these materials are scattered and do not exceed six inches (6") in any dimension. Perishable or spongy material shall not be used in final backfilling.

Sub-section E. Compaction:

Backfill shall be compacted by means of sheep-foot rollers, pneumatic tire rollers, vibrating rollers, or mechanical tampers. The Contractor shall be required to provide evidence of proper compaction in the form of test results from an outside agency.

Under pavements, shoulders or other surface improvements the in-place density shall be a minimum of ninety-six percent (96%) of laboratory standard the maximum dry density as determined by AASHTO T-99. In shoulders and other areas the in-place density shall be a minimum of ninety percent (90%) of the maximum dry density as determined by AASHTO T-99.

Fill material shall be placed at a moisture content and un-compacted lift thickness such that after compaction the required relative densities will be produced. In no event will the material be placed in lifts that, prior to compaction, exceed six inches (6") for foundation and embedment and twelve inches (12") for final backfill.

If the required relative density is not attained, test sections will be required to determine any adjustments in compaction equipment, thickness of layers, moisture content and compactive effort necessary to attain the specified minimum relative density.

Approval of equipment, thickness of layers, moisture content, and compactive effort shall not be deemed to relieve the Developer/Contractor of the responsibility for attaining the specified minimum relative densities. The Developer/Contractor, in planning its work, shall allow sufficient time to perform the work connected with test sections and to permit the Public Works Director/Engineer to make tests for relative densities.

Sub-section F. <u>Consolidation</u>

Consolidation of backfill shall be accomplished by those methods in which water is used as the essential agent to produce the desired condition of density and stability. Water shall be applied by jetting unless flooding is specifically authorized by the Public Works Representative/Engineer. Authorization by the Public Works Director/Engineer to use any consolidation method does not relieve the contractor of his responsibility to meet the specified density requirements. Water for consolidation shall be furnished at the contractor expense and be metered if filled by City owned water facility.

In the jetting procedure the jets shall be inserted at not more than four-foot intervals (staggered throughout the length of the back filled area) and shall be slowly forced down to the bottom of the trench or top of previously jetted lift and held until the trench back fill is completely saturated with water. Depth of jetted lift shall not exceed 5 feet unless otherwise approved by the Public Works Representative/Engineer.

The minimum size of hose equipment shall be as to provide a minimum pressure of 35 pounds per square inch at the discharge. The jet shall be a rigid iron pipe with a minimum diameter of one inch.

After the water-settled trench has set for several days, any depression in the trench shall be filled, mounded over, and wheel rolled to compact the material thus placed.

All precautions necessary shall be taken by the contractor to prevent damage and movement (including floating) of the pipeline, structures, and existing adjacent improvements and utilities. The use of consolidation methods will be allowed only when they not result in damage to adjacent ground. The contractor shall make his own determination in this regard, and shall assume all risks and liability for settlement or lateral movement of adjacent ground, improvements, or utilities, either on the surface of the ground or underground.

Section 2.08 TRENCH CROSSINGS STREETS AND DRIVEWAYS:

At road crossings or where existing driveways occur on a road, the Developer/Contractor shall make provisions for trench crossings either by means of backfill or temporary bridges.

Temporary Bridging. The contractor shall construct suitable bridging over the trench at all street intersections and at driveways to property abutting the line of the work, and at such other points as may be required. The bridging shall be of sufficient strength to carry the loads required. For public vehicle crossings it shall meet or exceed H-20 rating as defined in Department of Transportation standards.

Section 2.09 TRENCH IN EASEMENTS:

Any disturbance to property caused by the Developer/Contractor's activity within easements shall be restored to the satisfaction of the owner of the property. If necessary, shrubs, fences, or other objects shall be removed carefully. If work must occur on a lawn, the lawn shall be cut to a width of two feet (2') wider than the intended work area (one foot (1') on each side). The lawn sod shall be stacked separately from and shall not be mixed with other excavated material.

Where the pipeline or structure is located on, along or across sodded parking, lawns or grass plots, the contractor shall in advance of making the excavation, remove the lawn or sod and give it proper care and attention, and shall replace the same in as nearly the original location and condition as is reasonably possible after the excavation has been backfilled and settled. Where it is necessary to deposit the excavated material on lawns or parking during the process of construction, the contractor shall first spread canvas or similar material of suitable size upon the grass to prevent any of the excavated material from coming in contact with the sod. The excavated material shall be removed as soon as possible in order to avoid injury to the grass and the contractor shall replace, at his own expense, any sod that is damaged.

After the sod is removed, if excavation is necessary, the topsoil shall be removed to a depth of twelve inches (12"), or the actual depth of the topsoil, whichever is less. The topsoil shall be stored separately from and shall not be mixed with other excavated material.

Following completion of the backfilling and the compaction of the trench, the Developer/Contractor shall replace topsoil, lawn sod, shrubs, fences, and other items that may have been removed from within the easement area and shall clean up and remove any rocks, dirt or any other debris that remain from the construction work.

Where the trench is in an unpaved street, the backfilling shall be slightly rounded over the trench and left to settle for such time as the inspector may direct, at which time it shall be thoroughly rolled with a five (5) ton truck loaded to capacity. The entire area of the trench shall be covered at least three times by the tread of the tires, after which any depression or irregularities shall be smoothed up to the proper elevation and re-rolled. The surface over the trench shall be left in a uniformly smooth condition, conforming to the street surface and all excess material shall be removed. During the interval of waiting for settlement of the material in the trench, the Contractor shall keep the surface over the trench oiled and shall maintain said surface in good condition until finally completed and accepted.

Section 2.10 RESTORATION OF CONSTRUCTION SITE:

All areas disturbed by excavation and backfilling construction shall be restored to original condition, or better, at the Contractor's expense. During the progress of the Work, the Developer/Contractor shall clean up all construction debris, excess excavation, and excess materials, and shall restore all fences, irrigation structures, ditches, culverts, and similar items. The Developer/Contractor shall stockpile the excavated trench material so as to do the least damage to adjacent grassed areas, or fences, regardless of whether these are on private property or public rights-of-way. All excavated materials shall be removed from grassed and planted areas and these surfaces shall be left in a condition equivalent to their original surface and free from all rocks, gravel, boulders, or other foreign materials.

Section 2.11 DEVELOPER/CONTRACTOR'S RESPONSIBILITY:

The Developer/Contractor will be responsible to see that the backfilling and compaction are properly and adequately done. Settlement of trenches within a period of one (1) year after final acceptance of the project shall be considered incontrovertible evidence of inadequate compaction, and the Developer/Contractor shall be responsible for correcting the condition in accordance with the provisions of these Specifications. This includes the replacement of sidewalk, curb and gutter, and other surface improvements. All subsequent settling of backfill areas will become the sole responsibility of the contractor for a period of not less than one year following the final approval of the entire project.

DIVISION 3: CULINARY WATER

Section 3.01 GENERAL:

This Division covers furnishing and installing pressure pipe to the lines and grades shown on the drawings and/or established in the field, and all flushing, testing, repairing, and required to ensure adequate and safe operation of the water system. The standard pipe material for all pressure mains shall be C-900 PVC unless otherwise directed by the City Engineer. The minimum main diameter shall be eight (8)-inches.

Section 3.02 PIPE CONDITION:

Certification of all tests required by the American Water Works Association shall be provided by the manufacturer. The three-edge bearing test will be required, upon request of the inspector. All pipe shall be standard lengths except for making connections to valves, fittings, and other such closures.

Any material that becomes damaged shall be replaced by the Contractor/Developer at his own expense. The Contractor/Developer shall be responsible for the safe storage of material furnished by or to him, and accepted by him, and intended for the work, until it has been incorporated in the completed project.

Section 3.03 DUCTILE IRON PIPE:

Sub-section A. Materials:

Ductile iron pipe shall conform to all requirements of ANSI/AWWA C151/A21.51, "American National Standard for Ductile Iron Pipe, Centrifugally Cast in Metal Molds or Sand-Lined molds, for Water or Other Liquids." Minimum pressure Class will be 250 for pipes larger than 12-inch diameter. Pipes of 12-inch diameter and smaller shall be pressure Class 350. If thickness class pipe is used, pipes of diameters from 4-inches through 10-inches shall be minimum Class 51 and pipe from 12-inch diameter and larger shall be minimum Class 50.

All pipe shall be made of good quality Ductile Cast Iron and of such chemical composition and structure as is required to meet the physical and mechanical property requirements of the standard.

Required glands, gaskets, bolts and nuts shall be furnished.

The nominal laying length of the pipe shall be eighteen feet (18'). The maximum allowable pipe deflection shall be three degrees (3°) per joint with a recommended deflection of two degrees (2°) or less per joint. Pipe deflection shall be limited to two degrees (2°) at crosses, valves, couplings, and fire hydrants. Except where specifically noted on the plans, ductile iron pipe shall have bell and spigot ends. Ductile iron pipe underground shall be protected against external corrosion by loose polyethylene sleeves in accordance with AWWA C 105.

Sub-section B. Joints:

All fittings, hydrants and joints shall have restrained or flanged joints installed. Push on or mechanical joints are not acceptable. Lubricants shall be non-toxic and have no deteriorating effects on gasket materials. It shall not impart taste to water in a pipe. It shall conform in every way to ANSI 21.1 All bolts shall be covered in food grade grease prior to placement of plastic.

(1) Restrained Joints: All restrained joints shall meet requirements of ANSI/AWWA C111/A21.11. All gasket surfaces shall be smooth and free from imperfections. Gaskets shall conform to tests in accordance with specifications and shall be less than one year old. All restrained joint fittings shall have concrete thrust blocks as well.

~~Mechanical Joints: All mechanical joints shall meet requirements of ANSI/AWWA C111/A21.11. All gasket surfaces shall be smooth and free from imperfections. Gaskets shall conform to tests in accordance with specifications and shall be less than one year old.~~

~~(2) Push-on Joints: All push-on joints shall meet the requirements of ANSI/AWWA C111/A21.11. Gaskets shall be free from defects and not over one year old.~~

~~Lubricants shall be non-toxic and have no deteriorating effects on gasket materials. It shall not impart taste to water in a pipe. It shall conform in every way to ANSI 21.1~~

(2~~3~~) Flanged Joints: Flanges shall meet the requirements of ANSI/AWWA C110/A21.10, "American National Standard for Ductile Iron and Gray Iron Fittings, 3-inch Through 48-inch for Water and Other Liquids." Flanged joints shall be bolted firmly with machine, stud or cap bolts of proper size. Flange may be cast integrally with the pipe or may be screwed on threaded pipe. Flanges shall be faced and drilled and of proper dimensions for size and pressure required. Bolts and nuts, unless otherwise specified, shall be made of the best quality refined iron or metal steel and have clean, well-fitting threads. Bolts will be provided with standard hexagonal nuts and standard hexagonal heads. Bolts shall be of the diameter required for each flange and when installed shall be of length so that no more than 3/8-inch nor less than 1/8-inch extends past face of nut. All buried fittings having steel bolts shall be coated with a non-oxide wax and wrapped with polyethylene.

Gaskets shall be rubber, either ring or full face, and are 1/8th-inch thick. A gasket for each flanged joint of proper size as shown on the drawings. Gaskets shall conform to ASTM D-412. All flanged joint fittings shall have concrete thrust blocks as well.

Sub-section C. Coatings and Linings for Ductile Iron Pipe:

All exterior surfaces of pipe and fittings shall be coated with hot coal tar approximately 1 mil thick. All interior surfaces shall be cement mortar lined with a standard thickness according to ANSI/AWWA C104/A21.4-80.

Sub-section D. Corrosion Protection and Soil Tests:

When the Public Works/Engineer determines that a potential for corrosive conditions exists such as poor drainage or reactive soils, pipe and fittings shall be incased in polyethylene wrap. Polyethylene encasement of ductile iron pipe shall meet the requirements of ANSI A21.5 or AWWA C105.

Sub-section E. Flanges:

Flanges when required shall conform to ANSI/AWWA C115/A21.15-83.

Sub-section F. Fittings:

Fittings for Ductile Iron Pipe shall conform to the provisions of ANSI/AWWA C110/A21.10-82 or C153/A21.53-58. All fittings shall have flanged or restrained joints. All bolts shall be covered in food grade grease prior to placement of plastic.

Sub-section G. Magnetic Locator Tape:

All pipe shall include a 3-inch magnetic locator tape installed in the pipeline trench approximately 12-inches above the pipe. Identification tape shall be furnished with white or black printing on a colored field having the words: "CAUTION: POTABLE WATER - BELOW."

Sub-section H. Tracer Wire:

All pipes shall include a tracer wire installed at the same elevation as the centerline of the pipe. The wire shall be 14 gauge copper wire. The tracer wire shall be installed adjacent to and paralleling the pipe at a distance of no more than 6" from the outside edge of the pipe. At all tees the wire shall be properly spliced using a grease cap and wire nut or soldering. At all valves and fire hydrants the wire shall be brought up into the valve box just under the valve cover where it will be easily accessible.

Section 3.04 PVC PIPE:

Sub-section A. Materials:

Pipe for the transmission and distribution of water shall be manufactured in accordance with AWWA C900-81, "AWWA Standard for Polyvinyl Chloride (PVC) Pressure Pipe, 4-inch through 12-inch, for Water". The PVC pipe shall have a cast-iron-pipe-equivalent outside diameter and be a minimum of DR-14 pipe (305 psi)~~.~~

PVC pipe 14-inches and larger shall be manufactured in accordance with AWWA C905-88, "AWWA Standard for Polyvinyl Chloride (PVC) Water Transmission Pipe, Nominal Diameters 14-inch through 36-inch" and be a minimum of DR-18 pipe (235 psi). ~~All PVC pipe 4-inch and larger shall be DR-18 with a working pressure of 150 PSI.~~ Pipes smaller than 4-inch diameter shall be schedule 40 PVC. ~~All pipes being installed west of 2000 West within Syracuse City limits shall be DR 14.~~

PVC Class 900 pipe shall meet the requirements of ASTM D 2241 except that the pipe shall have an outside diameter of ductile iron pipe sizes instead of iron pipe sizes. The PVC pipe shall meet the requirements of the AWWA C 900 with pressure clasp of ~~15~~200 and the ~~D.R.~~DR of not less than 14~~8~~.

At least 85 per cent of the total footage shall be furnished in standard 20-foot lengths.

Color of all pipes for culinary water shall be blue.

Sub-section B. Joints:

Joints shall be push on rubber gasket type. Lubrication shall be water soluble, non-toxic, non-objectionable in taste and odor imparted to the water, non-supporting of bacteria growth, and have no deteriorating effect on the PVC pipe or rubber gaskets.

Sub-section C. Fittings:

All fittings to be used with the PVC pipe shall be the same as fittings for Ductile Iron Pipe and shall conform to the provisions of ANSI/AWWA C110/A21.10-82 or C153/A21.53-58. All fittings shall have flanged or restrained joints only. All bolts shall be covered in food grade grease prior to placement of plastic.

Sub-section D. Warning Tape:

All pipe shall include a 3-inch warning tape installed in the pipeline trench approximately 12-inches above the pipe. Identification tape shall be furnished with white or black printing on a colored field having the words: "CAUTION: POTABLE WATER - BELOW."

Sub-section E. Tracer Wire:

All pipe shall include a tracer wire installed at the same elevation as the centerline of the pipe. The wire shall be single strand 14 gauge coated copper. The tracer wire shall be installed adjacent to and paralleling the pipe at a distance of no more than 6" from the outside edge of the pipe. At all tees the wire shall be

properly spliced using a grease cap and wire nut or soldering. At all valves the wire shall be brought up into the valve box just under the valve cover where it will be easily accessible.

All fire hydrants shall have a Copperhead Industries, LLC Snake Pit 14" Magnetized Tracer Box with blue cast iron top (CHLD14B) installed a minimum of 12" from the front of each fire hydrant. The top of the tracer box shall match the top back of curb elevation. Tracer wire shall be connected to the Test Station.

Section 3.05 HDPE PRESSURE PIPE:

Sub-section A. Materials:

HDPE Pressure Pipe. High density polyethylene piping shall be Iron Pipe Size (IPS) nominal diameter pressure PE3408 HDPE pipe and manufactured from resins exhibiting a cell classification of PE 345464C conforming to ASTM D-3350. Manufacturing workmanship shall conform to ASTM F-714 and ANSI/AWWA C906.

PE3408 HDPE pipe shall be DR 13.5 and shall be produced in standard 40-ft lengths. The tolerance on length shall be 61% when the pipe is at 738F.

The high density polyethylene compound used in the manufacture of pressure water HDPE pipe shall meet or exceed cell classification 345464C in accordance with ASTM D3350 with a HDB rating of 1600 psi at 73°F.

PE3408 HDPE pipe shall be black in color and shall contain a minimum of 2½ percent carbon black for ultraviolet protection.

Sub-section B. Joints:

Plain end PE3408 HDPE pipe shall be joined using the manufacturer's recommended butt fusion procedure that is based on ASTM D2657 and PPI TR-33. Butt fusion joining shall be performed only by persons that have been qualified in the manufacturer's recommended butt fusion procedure by having made example joints that pass destructive joint quality tests.

HDPE pipe shall not be joined by solvent cements, adhesives (such as epoxies) or threaded connections. All joining methods shall be capable of conveying water at a minimum of 2.0 times the working pressure rating of the pipe.

All butt fusion joining equipment shall be equipped with a data logger that records butt fusion machine temperature, pressure, and time parameters for each field butt fusion joint. Data logger records for all field joints shall be downloaded and shall become part of the job records. Using the same pipe and equipment used in the field, a test joint shall be made and destructively tested. If the test joint fails destructive tests, new test joints shall be made and tested until passing results are obtained. Data logger results of the successful test joint shall be compared to the data logger record of field joints. Any field joint that fails data logger comparison shall be cut out and redone at Contractor expense.

When joints other than butt fusion are specified, joining by electrofusion or mechanical means such as flanges, Restrained Joint~~MJ~~ adapters, or mechanical couplings shall be used. Electrofusion and mechanical joints shall be assembled in accordance with the joining device manufacturer's instructions. ~~Mechanical coupling~~Restrained joints shall provide restraint against disjoining that exceeds the pullout force generated from thermal contraction and pipe pressurization. ~~Mechanical~~ Restrained joints shall require the use of stainless steel bolts.

Sub-section C. Fittings:

1. Use ductile iron flanged fittings where shown on the Drawings. Flanged fittings shall conform to ANSI/AWWA C110/A21.10 ductile-iron and gray-iron fittings rated at 350 psi working pressure and gray-iron rated at 250 psi working pressure. Flange bolts shall be Type 316 stainless steel with gaskets to protect dissimilar metals.
2. Use Victaulic fittings and couplings where shown on the Drawings. Victaulic fittings for AWWA size pipe shall be supplied with rigid radius grooves in accordance with ANSI/AWWA C-606. Fittings conform to ANSI A21.10/AWWA C-110 for center-to-end dimensions and AWWA C-153 or ANSI 21.10/AWWA C-110 for wall thickness. Fittings shall be rated for working pressures to 350 psi (ductile iron) in 3 - 12" sizes and to 250 psi (gray iron) in sizes 3 - 12", and to 250 psi (ductile iron), or 150 psi (gray iron) for 14" and larger. Use Style 31 couplings (two-piece for sizes up to 12" and four-piece for sizes up to 20") with Grade "M" FlushSeal® gaskets.

Use HDPE fittings where shown on the Drawings. PE3408 HDPE fittings shall be plain end for butt fusion joining and shall be molded in accordance with ASTM D3261 or fabricated in accordance with ASTM F2206. The high density polyethylene compound used in the manufacture of non-pressure or pressure PE3408 HDPE molded and fabricated fittings shall meet or exceed cell classification 345464C in accordance with ASTM D3350 with a HDB rating of 1600 psi at 73°F. Recycled materials are prohibited.

a. PE3408 HDPE fittings shall contain a minimum of 2½ percent carbon black for ultraviolet protection.
b. At the point of fusion, PE3408 HDPE fittings shall have a minimum wall thickness that is not less than the mating pipe minimum wall thickness, and not more than 30% greater than the mating pipe wall thickness.
c. PE3408 HDPE fittings for pressure water shall have the same pressure rating as the mating pressure pipe. Pressure de-rated fittings are prohibited. Full pressure rating shall be provided with additional wall thickness in the fitting body. External reinforcement or encasement is not permitted for pressure up-rating purposes.
d. In Cul-de-Sacs, or locations where the pressure main is permanently terminated, a fused cap will be required. At locations where the pressure main is temporarily dead-ended, a fuse flange and blind flange will be required.

Sub-section D. Magnetic Locator Tape:

All pipe shall include a continuously connected 3-inch magnetic locator tape installed in the pipeline trench approximately 12-inches above the top of pipe. Identification tape shall be furnished with white or black printing on a blue colored field having the words: "CAUTION: POTABLE WATER BELOW"

Sub-section E. Tracer Wire:

All pipe shall include a tracer wire installed at the same elevation as the centerline of the pipe. The wire shall be single strand 14 gauge coated copper. The tracer wire shall be installed adjacent to and paralleling the pipe at a distance of no more than 6" from the outside edge of the pipe. At all tees the wire shall be properly spliced using a grease cap and wire nut or soldering. At all valves the wire shall be brought up into the valve box just under the valve cover where it will be easily accessible.
~~A minimum 14 gage solid insulated copper wire shall follow all non-metallic pipes and be connected to all valve and fire hydrants and service laterals.~~

All fire hydrants shall have a Copperhead Industries, LLC Snake Pit 14" Magnetized Tracer Box with blue cast iron top (CHLD14B) installed a minimum of 12" from the front of each fire hydrant. The top of the tracer box shall match the top back of curb elevation. Tracer wire shall be connected to the Test Station.

Sub-section F. Service Connections:

All service tap materials shall be formed from the same material as the HDPE main. Service taps shall be installed only by persons who have been adequately trained by the pipe or equipment supplier or a trained

technician provide by the pipe or equipment supplier. Fusing methods shall conform to the recommendations of the pipe manufacturer.

Service taps on HDPE mains twelve inches (12") and smaller, inside diameter, are to be installed by side fusion. Service taps on HDPE mains sixteen inches (16") and larger, inside diameter, may be attached by socket fusion or side-wall fusion. Side-wall fusion will require the use of a self-tapping service tee connection which incorporates a brass cutter for tapping the HDPE main which retains the coupon. Socket fusion procedures shall not allow the service to protrude beyond the inside of the pipe wall. The polyethylene service tubing shall be attached to the tee by fusing or mechanical coupling as appropriate.

Section 3.06 OTHER PIPE MATERIALS:

Steel Pipe. Steel pipe shall conform to the current AWWA Specification C 201. Steel piping shall not be used for culinary water mains.

Concrete pipe and cast iron piping shall not be used for culinary water purposes.

Section 3.07 PIPE INSTALLATION:

Sub-section A. Cutting:

Cutting of pipe for closure pieces or for other reasons shall be done in a neat and workmanlike manner by a method recommended by the manufacturer. After cutting, the pipe shall be beveled and filed to prevent gasket damage in joint assembly.

Sub-section B. Dewatering of Trench:

Where water is encountered in the trench, it shall be removed during pipe laying operations and the trench so maintained until the ends of the pipe are sealed. See "Control of Groundwater" in Division 2 Trench - Excavation and Backfill.

Sub-section C. Laying of Pipe:

The pipe and pipe coating (where applicable) shall be inspected for defects before installation. Any defects shall be repaired or the pipe shall be replaced, whichever is deemed necessary by the Public Works Representative/Engineer.

All pipes shall be laid and maintained to the required lines and grades with fittings and valves at the required locations. The pipes shall be installed with a ~~36~~48-inch minimum cover from finished road surface for culinary water. The Developer/Contractor shall be responsible to install the pipeline to the alignment set by the Public Works Director/Engineer or as shown on the Drawings. Maximum depth shall be 6 feet unless otherwise approved by Engineer or Inspector.

Unless otherwise directed, pipe shall be laid with bell ends facing the direction of laying, and for lines on an appreciable slope, bells shall, at the discretion of the Engineer, face upgrade.

All pipes, fittings and valves shall be carefully lowered from the truck when unloading or when installing into the trench. This should be done one piece at a time in order to prevent damage to pipe materials and protective coatings and linings. Under no circumstances shall materials be dropped or dumped from the truck or into the trench.

The Developer/Contractor shall take the necessary precautions such that foreign materials do not enter into the pipe. No debris, tools, or other materials shall be placed in the pipe during laying operations. When laying of pipe is not in progress, the pipe shall be closed by a water-tight plug.

Maximum deflections at pipe joints shall not exceed the joint specifications of AWWA C600 of latest revision, or the recommendations of the pipe manufacturer.

Deflections in PVC pipe shall be made by longitudinal bending of the barrel of the pipe rather than deflecting the pipe joints. Longitudinal bending shall be limited to eighty percent (80%) of the manufactures recommended maximum bending radius. Wherever necessary to deflect pipe from a straight line, either in the vertical or horizontal plane to avoid obstructions, to plumb stems, or where long radius curves are permitted, the degree of deflection shall be approved by the Engineer or Inspector.

Temporary support, adequate protection and maintenance of all underground and surface utility structures, drains, sewers and other obstructions encountered in the progress of the work shall be furnished by the Contractor at his own expense under the direction of the Engineer.

Wherever existing utility structures or branch connections leading to main sewers or to main drains, or other conduits, ducts, pipes, or structures present obstruction to the grade and alignment of the pipe, they shall be permanently supported, removed, relocated or reconstructed by the Contractor through cooperation with the owner of the utility, structure or obstruction involved. In those instances where their relocation or reconstruction is impracticable, a deviation from line and grade will be ordered, and the change shall be made in the manner directed by the Engineer. Connections to private residences shall be cut and looped around the pipe line.

All open ends of pipe shall be closed by approved means, and no trench water shall be permitted to enter the pipe under any circumstance. Any pipe that is contaminated shall require pipe to be pulled and replaced.

Cutting of pipe for inserting valves, fittings or closure pieces shall be done in a neat and workmanlike manner without damage to the pipe. All cut edges shall require use of de-burring tool to provide smooth edge.

Jointing of all pipe shall be as recommended by the manufacturer. All pipes shall be handled in such a way so as to prevent damage to the coating and lining. Refer to backfilling specifications for proper bedding and compaction. ~~Mega lugs~~Flanged or restrained Joints and thrust blocking shall be applied at all tees, plugs, caps and at bends deflecting 11 ¼ ~~22 1/2~~ degrees or more. Prevention of concrete adhesion by means of 12~~0~~ mil plastic sheeting to protect valves or pipe material shall be directed by the City Inspector and all mechanical bolts shall be greased for future maintenance.

Precautions must be taken to protect pipe interiors, fittings, and valves against contamination. Pipe delivered for construction shall be strung so as to minimize entrance of foreign material. When pipe laying is not in progress, as for example at the close of the day's work, all openings in the pipeline shall be closed by water tight plugs. Joints of all pipe in the trench shall be completed before work is stopped. If water accumulates in the trench, the plugs shall remain in place until the trench is dry.
Extreme care and thorough inspection shall be practiced during the laying of water mains to prevent small stones, pieces of concrete, particles of metal, or other foreign material that may gain access to mains newly laid or repaired.

Sub-section D. Pipe Bedding:

All pipes shall be protected from lateral displacement and possible damage resulting from impact or unbalanced loading during backfilling operations by being adequately bed in accordance with Division 2 of these specifications.

In the event trench materials are not, in the judgment of the Public Works Representative/Engineer, satisfactory for pipe bedding, imported granular bedding will be required. See Division 2 of these specifications.

Sub-section E. Thrust Blocking:

Thrust blocking shall be applied at all tees, valves, plugs, caps and at bends deflecting 11 1/4 degrees or more on pipe sizes 4 inches in diameter and greater. The fitting shall be encased in a 12 mil protective plastic wrap before the thrust block is poured. Reaction blocking shall be concrete having a compressive strength of not less than 4,000 pounds per square inch at 28 days. Blocking shall be placed between undisturbed soil and the fitting to be anchored. The area of bearing on the pipe and on the ground shall be as shown in the Drawings. The blocking shall be so placed that the pipe and the fittings will be accessible for repair.

Sub-section F. Connections to Existing Water Lines:

Information on the drawings regarding existing water lines is taken from "record" drawings from the ~~c~~City or utility company files and may or may not be accurate as to size, type of material or location. The Developer/Contractor will be responsible to determine the proper fittings and materials required, obtain the Public Works Representative/Engineer's approval of the planned connection, and perform the construction in a suitable fashion. Where fitting sizes, such as tees and crosses, are shown on the plans, those sizes will be used. However, no attempt has been made to show all needed fittings or materials. Developer/ Contractor will be responsible to give at least 24 hour notice to residents of any water service interruption; however, the City reserves the right to delay water shutdowns for a period longer than 24 hours if the City deems necessary.

Section 3.08 WATER SERVICE LATERALS

Water service laterals shall be constructed with materials specified and at the locations shown on the Standard Drawings or at the actual location established during construction.

Pipe for culinary water service laterals shall be three-quarters of an inch (3/4") copper or larger and shall comply with ASTM Specification B88.

Services shall be identified for each lot by size and location. Copper lines shall be installed form saddle connection to meter base. All fittings on the downstream side of the meter location shall be brass and installed as outlined in the Standard Drawings and indicated herein.

Sub-section A. Extent of Laterals:

New water service laterals shall be located at the center of the lot and shall extend from the water main to ten-feet (10') past the property line. When the location of the service lies within the driveway, it shall be relocated. The lateral shall be installed prior to the installation of the curb and sidewalk but the meter setter, box and cover shall not be installed until after the curb in installed. A two-inch (2") by four-inch (4") by six-foot (6') marker, with the top twelve-inches (12") painted blue, shall be installed to clearly mark the end of each lateral line. Copper services shall not have any joints between the corporation stop at the main and the meter setter.

Water service laterals relocated during construction of new pipelines shall extend from the water main to the water meter if the existing service is other than copper or is in poor condition. Copper water services shall not have any joints between the corporation stop and the meter.

Sub-section B. Excavation and Backfill:

Trench excavation and backfill shall conform to the applicable paragraphs of Division 2. Bedding shall meet the requirements of Division 2.

Sub-section C. Connection to Main:

Connections of services to main lines shall be an all Brass tapping saddle for PVC mains, or direct tap (with CC thread) for ductile iron mains. All connections shall be made using pack joints (compression)

type fittings or Insta- Tite connections. The corporation stop shall be a three-quarter inch (3/4") Mueller H-15008 "CC" Pack joint or an Insta-Tite connection for service saddle tap.

On existing services the existing connection to main will be used unless damaged or leaking.

Sub-section D. Meter Setter, Box and Cover:

The lateral shall be installed prior to the installation of the curb and sidewalk. The meter setter shall be Ford VBHC 2184433. The meter box shall be 18-inch (18") diameter by thirty-six-inch (36") high corrugated with groove to fit over the inlet and outlet line. The meter cover to be D&L Supply L-2240 Reader Lid. Cover to be three-eighths-inch (3/8") above top back of curb. Centerline of cover shall be midway between the back of curb and walk. The cover shall be marked "Water." Meter boxes may be concrete or PVC (80 psi PIP) with smooth exterior

Meter type sensus 5/8 setter to be mueller as typical or 1 inch meter as approved by engineer

Protection. Contractor shall be responsible to ensure that all meter boxes are protected from physical damage during construction.

All Water Meter Boxes shall have physical protection surrounding the facility to prevent damage from construction activities. This protection should remain in place until the final inspection of the building. All meter lids shall remain closed and on the meter box which is only accessed by authorized personnel (City Employees). Upon a water service request a meter will be set and turned on for construction use. Meters will not be set if the meter box setter and lid is damaged or not found in accordance to the development standards. Not more than one grade ring is to be used in the height adjustment. Setters shall be free of dirt to within 12 inches of the meter area. The use of jumpers is prohibited. It will be the responsibility of the contractor/developer to have means of turning on & off the water outside of the meter box on the owner side of the meter box assembly.

Any meter boxes grouped into a central location should have permanently attached by copper wire to the meter setter a brass tag stamped with the correct address of the building in which it serves.

Sub-section E. Special Joints and Fittings:

1. Flared. The use of flare fittings must be approved by Public Works.

2. Solder and Sweat Joints. Joints in copper tubing shall be made by the appropriate use of approved brass or copper fittings. Surface to be joined by soldering shall be thoroughly cleaned bright by manual or mechanical means. The joints shall be properly fluxed with an approved non-corrosive type flux and made up with approved solder. All solders and fluxes shall not have a lead content that exceeds current EPA guidelines. No joints on service laterals are permitted under asphalt.

3. Copper Tubing to Screw Pipe Joints. Joints from copper tubing to threaded pipe shall be made by the use of brass adapter fittings. No joints on service laterals are permitted under asphalt.

Sub-section F. Separation:

Water service lines shall not be run or laid in the same trench as the building sewer lateral. ~~Any exceptions shall be approved by Public Works/ Engineer.~~ At all locations there shall be at least twelve (18~~2~~) inches of separation **vertically** above the sewer lateral and ten (10) feet **horizontal** separation. In cases where a private sprinkler system is tied into the culinary service it shall be at least three (3) feet beyond the meter on the property side.

Sub-section G. Flushing, Testing and Disinfecting:

Flushing, testing and disinfecting shall be done at the time the water main is flushed, tested and disinfected. The end of the trench where the stub out past the meter is located shall be left open to allow for discharging water out of the service line for proper flushing and to insure that the line has been adequately disinfected. The line shall be flushed thoroughly following installation. Flushing, testing and disinfecting shall conform to the applicable paragraphs of this division.

On existing services the Developer/Contractor shall take precautions to prevent contamination of the pipe and connections during installation. The line shall be flushed thoroughly following installation.

Treated water shall be retained in the pipe long enough to destroy all nonsporeforming bacteria. This period should be at least 24 hours and preferably longer, as may be directed. After the chlorine-treated water has been retained for the required time, the chlorine residual at the pipe extremities and at other representative points should be at least 25 ppm.

Sub-section H. Damage and Repair of Water Mains and Appurtenances:

The Developer/Contractor shall be responsible for any damage to water mains and water facilities caused by his operations. The Developer/Contractor may be relieved of the responsibility under the following conditions:

(1) He has not excavated below or beyond the required excavation lines, and
(2) He has given proper and timely notice of his work plans, and
(3) He has used reasonable care, and cooperated, minimizing the damage.

Any damage to water gates, hydrants, valve chambers, meter boxes, and other surface appurtenances that result from the Developer/Contractor's operation shall be its sole responsibility.

Section 3.09 FLUSHING, DISINFECTING, AND TESTING:

Sub-section A. <u>Flushing:</u>

All foreign matter or dirt shall be removed from the inside of the pipe before it is lowered into its position in the trench, and it shall be kept clean by approved means during and after laying. All new water systems or extensions to existing systems shall be thoroughly flushed before being placed in service. Flushing shall be accomplished through hydrants, or end of line blow-off assemblies at a minimum flushing velocity of 2.5-feet per second. See chart below.

FLOW RATE AND OPENINGS TO FLUSH PIPELINES
(40- psi Residual Pressure)

Pipe Size (inches)	Flow Required to Produce 2.5 fps velocity (gpm)
2	26
4	100
6	220
8	390
10	610
12	880

14	1,200
16	1,565
18	1,980
20	2,450
24	3,525
30	5,507

Sub-section B. Disinfection:

After flushing, all culinary water lines shall be disinfected by chlorination. Chlorination shall provide a minimum of 25 ppm residual after 24 hours contact in the pipeline. This may be expected with an application of 50 ppm, although some conditions may require more. Chlorine in the form of a 1% slurry of high-test calcium hypochlorite (HTH, Perchloron, Pittchlor, etc. which are 70% available chlorine by weight) shall be fed into the pipeline in such a manner as to mix with the water flowing in the pipeline. (A 1% slurry - 10,000 ppm - results from mixing one pound of calcium hypochlorite with 8.40 gallons of water.) When specifically authorized by the City, chlorine pellets or powder may be used. Rechlorination of pipes will always require a slurry.

The following table provides information as to the required quantity of slurry to be used per 100 feet of pipe to provide a chlorine concentration of 50 ppm:

Pipe Size (in.)	Vol. of 100 ft. Length (gal)	Required Amount of 1 % Chlorine Slurry (gal)
1 ½	9.18	0.07
2	16.32	0.12
2 ½	25.50	0.18
3	36.73	0.26
4	65.28	0.47
6	146.90	1.05
8	261.10	1.87
10	408.10	2.92
12	587.60	4.20

Calculation: (8.4 lb/1 gal water)*(8.4 gal water) + 1 lb HTH = 71.5 lb slurry; (71.5/10,000)*(gal)=gal of slurry

During the process of chlorinating the pipeline, all valves and other pipeline appurtenances shall be operated several times to provide sufficient contact with the chlorinating agent. After chlorination, the mains shall be drained and flushed thoroughly according to Section A in this Specification above and, if necessary, re-chlorinated until a satisfactory bacteriological test is obtained.

The City will pay for the initial bacteriological test out of the subdivision fees. If the initial test fails, the Contractor/Developer will pay for subsequent tests.

Disinfection shall conform to the requirements of AWWA C651-05 (or latest edition).

(a) General. Disinfection of water mains shall be done in accordance with "Procedure for Disinfecting Water Mains", AWWA - C651. The interior of all pipe, fittings and other accessories shall be kept as free as possible from dirt and foreign matter at all times.
(b) Chlorination.

(1) Form of Chlorine and Means of Application. Before being placed in service, all new water mains shall be chlorinated. If the available water is more alkaline than pH 8, the holding time in the main shall be increased at the discretion of the Engineer.

(2) Form of Applied Chlorine. Either of the following forms of chlorine may be used, subject to the approval of the Engineer: Liquid Chlorine, Calcium Hypochlorite Tablets

(3) Methods of Chlorine Application.

(a) Continuous Feed Method. This method is suitable for general application.

Pipe Size (in.)		100% Chlorine (lb)		1 % Chlorine Solutions (gal.)
4		0.13		0.16
6		0.30		0.36
8		0.54		0.65
10		0.85		1.02
12		0.12		1.44

TABLE 1: Chlorine required to produce 25 mg/l concentration in 100 ft. of Pipe - by Diameter

Water from the existing distribution system or other approved sources of supply shall be made to flow at a constant, measured rate into the newly-laid pipeline. The water shall receive a dose of chlorine, also fed at a constant, measured rate. The two rates shall be proportioned so that the concentration in the water in the pipe is maintained at a minimum of 50 mg/l available chlorine. To assure that this concentration is maintained, the chlorine residual should be measured at regular intervals in accordance with the procedures described in the current edition of Standard Methods and AWWA M12 - Simplified Procedures for Water Examination.

Table 1 gives the amount of chlorine residual required for each 100 ft. of pipe of various diameters. Solutions of 1 per cent chlorine may be prepared with sodium hypochlorite or calcium hypochlorite. The latter solution requires approximately 1 lb. of calcium hypochlorite in 8.5 gal. of water.

During the application of the chlorine, valves shall be manipulated to prevent the treatment dosage from flowing back into the line supplying the water. Chlorine application shall not cease until the entire main is filled with the chlorine solution. The chlorinated water shall be retained in the main for at least 24 hrs. during which time all valves and hydrants in the section treated shall be operated in order to disinfect the appurtenances. At the end of this 24 hr. period, the treated water shall contain no less than 25 mg/l chlorine throughout the length of the main

(b) Tablet Method. Tablets are placed in each section of pipe and also in hydrants, hydrant branches, and other appurtenances. They shall be attached by an adhesive, except for the tablets placed in hydrants and in the joints between the pipe sections. All the tablets within the main must be at the top of the main. If the tablets are fastened before the pipe section is placed in the trench, their position should be marked on the section to assure that there will be no rotation. In placing tablets in joints, they are either crushed and placed on the inside annular space, or, if the type of assembly does not permit, they are rubbed like chalk on the butt ends of the sections to coat them with calcium hypochlorite.

The adhesive may be Permatex No. 1 or any alternative approved by the Engineer. There shall be no adhesive on the tablet except on the broad side next to the surface to which the tablet is attached.

(4) Filling and Contact. When installation has been completed, the main shall be filled with water at a velocity of less than 1-ft/sec. This water shall remain in the pipe for at least 24 hr.

Valves shall be manipulated so that the strong chlorine solution in the line being treated will not flow back into the line supplying the water.

	Diameter of Pipe (in.)					
Length of	2	4	6	8	10	12

Section (ft.)						
13 or less	1	1	1	1	2	3
18	1	1	1	2	3	4
20	1	1	1	2	3	4
30	1	1	2	3	4	6
40	1	1	2	4	5	7

TABLE 2: Number of 5 gram calcium Hypochlorite Tablets Required for Dose of 25 Mg/l (Based on 3 1/4 grams available chlorine per tablet).

Following chlorination, all treated water shall be thoroughly flushed from the newly-laid pipeline at its extremities until the replacement water throughout its length shall, upon test, be proved comparable to the quality of water served the public from the existing water supply system and approved by the public health authority having jurisdiction. This quality of water delivered by the new main should continue for a period of at least two full days as demonstrated by laboratory examination of samples taken as desired by the City. ~~from a tap located and installed in such a way as to prevent outside contamination. Samples should never be taken from an unsterilized hose or from a fire hydrant because such samples seldom meet current bacteriological standards.~~

Should the initial treatment fail to result in the conditions specified above, the chlorination process shall be repeated until such results are obtained.

Sub-section C. <u>Pressure Test:</u>

All newly laid pipes or any valved section thereof shall be subjected to a hydrostatic pressure. A leakage test shall be conducted concurrently with the pressure test.

(a) Pressure During Test. After the pipe has been laid and partially backfilled, all newly laid pipe, or any valved section of it shall, unless otherwise specified, be subjected to maximum operating pressure.

(b) Duration of Pressure Test. The duration of each pressure test shall be at least 120 minutes at 200 psi. If service connections are installed then 150 psi. shall be allowed at 120 minutes.

(c) Procedure. Each valved section of pipe shall be slowly filled with water and the specified test pressure, measured at the point of lowest elevation, shall be applied by means of a pump connected to the pipe in a satisfactory manner. The pump, pipe connections and all necessary apparatus shall be furnished by the Contractor.

(d) Expelling Air before Test. Before applying the specified test pressure, all air shall be expelled from the pipe. To accomplish this, taps shall be made, if necessary, at points of highest elevation, and afterward tightly plugged.

1. Test Pressure Restrictions:

Test pressures shall:

a) Not be less than 150 psi pressure at the highest point along the test section.

b) Not exceed pipe or thrust restraint design pressures.

c) Be of at least 2-hour duration.

d) Not vary by more than plus or minus five (± 5) psi for the duration of the test.

e) Not exceed twice the rated pressure of the valves or hydrants when the pressure boundary of the test section includes closed gate valves or hydrants.

f) Not exceed the rated pressure of the valves when the test boundary of the test section includes closed, resilient-seated gate valves or butterfly valves.

2. Pressurization:

Each valved section of pipe shall be slowly filled with water to the specified test pressure, based on the elevation of the lowest point of the line or section under test and corrected to the elevation of the test gage, by means of a pump connected to the pipe in a manner satisfactory to the Public Works Representative/Engineer.

3. Air Removal:

Before applying the specified test pressure, air shall be expelled completely from the pipe, valves, and hydrants. If permanent air vents are not located at all high points, the Developer/Contractor shall install corporation cocks at such points so that the air can be expelled as the line is filled with water. After all the air has been expelled, the corporation cocks shall be closed and the test pressure applied. At the conclusion of the pressure test, the corporation cocks shall be removed and plugged with brass plugs.

4. Examination:

All exposed pipe, fittings, valves, hydrants, and joints shall be examined carefully during the test. Any damaged or defective pipe, fittings, valves, or hydrants that are discovered following the pressure test shall be repaired or replaced with sound materials and the test shall be repeated until it is satisfactory to the Owner.

Sub-section D. <u>Leakage Test:</u>

A leakage test shall be conducted concurrently with the pressure test.

1. Leakage Defined:

Leakage shall be defined as the quantity of water that must be supplied into the newly laid pipe, or any valved section thereof, to maintain pressure within 5 psi of the specified test pressure after the air in the pipeline has been expelled and the pipe has been filled with water.

2. Allowable Leakage:

No pipe installation will be accepted if the leakage is greater than that determined by the following formula:

$$L = \frac{SD(P)^{0.5}}{133,200}$$

in which L is the allowable leakage, in gallons per hour; S is the length of pipeline tested in feet; D is the nominal diameter of the pipe, in inches; and P is the average test pressure during the leakage test, in pounds per square inch gage.

a) Allowable leakage at various pressures is shown in Table 1.

b) When testing against closed metal-seated valves, an additional leakage per closed valve of 0.0078 gal/hr/in. of nominal valve size shall be allowed.

c) When hydrants are in the test section, the test shall be made against the closed hydrant **.**

TABLE 1

Allowable Leakage per 1000 ft. of Pipeline - gph

Avg. Test Pressure *psi (Bar)*	Nominal Pipe Diameter–*in.*															
	3	4	6	8	10	12	14	16	18	20	24	30	36	42	48	54
450 (31)	0.48	0.64	0.95	1.27	1.59	1.91	2.23	2.55	2.87	3.18	3.82	4.78	5.73	6.69	7.64	8.60
400 (28)	0.45	0.60	0.90	1.20	1.50	1.80	2.10	2.40	2.70	3.00	3.60	4.50	5.41	6.31	7.21	8.11
350 (24)	0.42	0.56	0.84	1.12	1.40	1.69	1.97	2.25	2.53	2.81	3.37	4.21	5.06	5.90	6.74	7.58
300 (21)	0.39	0.52	0.78	1.04	1.30	1.56	1.82	2.08	2.34	2.60	3.12	3.90	4.68	5.46	6.24	7.02
275 (19)	0.37	0.50	0.75	1.00	1.24	1.49	1.74	1.99	2.24	2.49	2.99	3.73	4.48	5.23	5.98	6.72
250 (17)	0.36	0.47	0.71	0.95	1.19	1.42	1.66	1.90	2.14	2.37	2.85	3.56	4.27	4.99	5.70	6.41
225 (16)	0.34	0.45	0.68	0.90	1.13	1.35	1.58	1.80	2.03	2.25	2.70	3.38	4.05	4.73	5.41	6.03
200 (14)	0.32	0.43	0.64	0.85	1.06	1.28	1.48	1.70	1.91	2.12	2.55	3.19	3.82	4.46	5.09	5.73
175 (12)	0.30	0.40	0.59	0.80	0.99	1.19	1.39	1.59	1.79	1.98	2.38	2.98	3.58	4.17	4.77	5.36
150 (10)	0.28	0.37	0.55	0.74	0.92	1.10	1.29	1.47	1.66	1.84	2.21	2.76	3.31	3.86	4.41	4.97
125 (9)	0.25	0.34	0.50	0.67	0.84	1.01	1.18	1.34	1.51	1.68	2.01	2.52	3.02	3.53	4.03	4.53
100 (7)	0.23	0.30	0.45	0.60	0.75	0.90	1.05	1.20	1.35	1.50	1.80	2.25	2.70	3.15	3.60	4.05

*If the pipeline under test contains sections of various diameters, the allowable leakage will be the sum of the computed leakage for each size.
**To obtain leakage in liters/hour, multiply the values in the table by 3.785.

3. Acceptance of Installation:

Acceptance shall be determined on the basis of allowable leakage. If any test of pipe laid discloses leakage greater than specified, the Developer/Contractor shall, at its own expense, locate and repair the defective material until the leakage is within the specified allowance.

All visible leaks are to be repaired regardless of the amount of leakage.

DIVISION 3A: PRESSURE IRRIGATION

Section 3A.01 GENERAL:

This division covers furnishing and installing pressure pipe as shown on the Drawings or established in the field, and all flushing, testing, repairing, as required to ensure adequate and safe operation of the water system. Certification of all tests required by the American Water Works Association shall be provided by the manufacturer. The three-edge bearing test will be required, upon request of the inspector. All pipe shall be standard lengths except for making connections to valves, fittings, and other such closures. The minimum main diameter shall be eight (8)-inches.

Section 3A.02 DUCTILE IRON PIPE:

Sub-section A. Materials:

Ductile iron pipe shall conform to all requirements of ANSI/AWWA C151/A21.51, "American National Standard for Ductile Iron Pipe, Centrifugally Cast in Metal Molds or Sand-Lined molds, for Water or Other Liquids." The minimum Pressure Class will be 200. If thickness class pipe is used, the minimum shall be Thickness Class 50.

All pipe shall be made of good quality ductile cast iron and of such chemical composition and structure as is required to meet the physical and mechanical property requirements of the standard.

Sub-section B. Joints:

All fittings, hydrants and joints shall have restrained or flanged joints installed. Push on or mechanical joints are not acceptable. Lubricants shall be non-toxic and have no deteriorating effects on gasket materials. It shall not impart taste to water in a pipe. It shall conform in every way to ANSI 21.1

(1) Restrained Joints: All restrained joints shall meet requirements of ANSI/AWWA C111/A21.11. All gasket surfaces shall be smooth and free from imperfections. Gaskets shall conform to tests in accordance with specifications and shall be less than one year old. All restrained joint fittings shall have concrete thrust blocks as well.

~~**Mechanical Joints**: All mechanical joints and gaskets shall meet the requirements of ANSI/AWWA C111/A21.11. All gaskets shall be smooth and free of porous areas, foreign materials, and visible defects. Gaskets shall be less than one (1) year old.~~

~~**2. Push-on Joints**: All push-on joints and gaskets shall meet the requirements of ANSI/AWWA C111/A21.11. All gaskets shall be smooth and free of porous areas, foreign materials, and visible defects. Gaskets shall be less than one (1) year old.~~

~~Lubricants shall have no deteriorating effects on gasket materials. Lubricants shall conform to ANSI 21.11.~~

3. Flanged Joints: Flanges, when required, shall conform to ANSI/AWWA C115/A21.15-83. Flanged joints shall meet the requirements of ANSI/AWWA C110/A21.10, "American National Standard for Ductile Iron and Gray Iron Fittings, 3-inch Through 48-inch for Water and Other Liquids." Flanged joints shall be bolted firmly with machine, stud, or cap bolts of proper size. Flanges may be cast integrally with the pipe or may be screwed on a threaded pipe. Flanges shall be faced and drilled and dimensioned properly for the size and pressure required. Bolts and nuts, unless otherwise specified, shall be made of the best quality refined iron or steel, and have clean, well-fitting threads. Bolts will be provided with standard hexagonal nuts and standard hexagonal heads. Bolts shall be of the diameter required for each flange, and when installed shall be of length so that no more than three-eighths inch (3/8") nor less than one-eighth inch (1/8") extends past the face of the nut. All buried metallic fittings and bolts shall be coated with a non-oxide wax and wrapped with polyethylene.

Formatted: Indent: Left: 0.5", Hanging: 0.5", Tab stops: 0.5", Left

Formatted: Indent: Left: 0.5", Hanging: 0.5"

Formatted: Indent: Hanging: 0.5"

Gaskets shall be rubber, either ring or full face, and shall be one-eighth-inch (1/8") thick.

Sub-section C. Coatings and Linings for Ductile Iron Pipe:

All exterior surfaces of pipe and fittings shall be coated with hot coal tar at least one (1) mil thick. All interior surfaces shall be cement mortar lined with a standard thickness according to ANSI/AWWA C104/A21.4-80.

Sub-section D. Fittings:

Fittings for ductile iron pipe shall conform to the provisions of ANSI/AWWA C110/A21.10-82 or C153/A21.53-58. All elbows, 90º caps, and loops must be mega lugged. All fittings must be wrapped & greased before back fill. All fittings shall be Restrained~~Mechanical~~ Joint~~ (MJ)~~ or flanged type. ~~unless otherwise specified by the Public Works Representative/Engineer.~~ All bolts shall be covered in food grade grease prior to placement of plastic.

Sub-section E. Locator Tape:

All pipe shall include a 3-inch warning tape installed in the pipeline trench approximately 12-inches above the pipe. Identification tape shall be furnished with white or black printing on a colored field having the words: "CAUTION: IRRIGATION LINE BURIED BELOW"

Section 3A.03 PVC PIPE:

Sub-section A. Materials:

Pipe for the transmission and distribution of water shall be manufactured in accordance with AWWA C900-81, "AWWA Standard for Polyvinyl Chloride (PVC) Pressure Pipe, 4-inch through 12-inch, for Water:" The PVC pipe shall have a cast-iron-pipe-equivalent outside diameter and be a minimum of DR-14 pipe

PVC pipe fourteen-inches (14") and larger shall be manufactured in accordance with AWWA C905-88, "AWWA Standard for Polyvinyl Chloride (PVC) Water Transmission Pipe, Nominal Diameters 14-inch through 36-inch~~.~~"~~-~~and be a minimum of DR-18 pipe. ~~.All PVC pipe four-inch (4") and larger shall be dimension ratio (DR) 18 with a working pressure of 150 psi. The PVC pipe shall have a cast-iron-pipe-equivalent outside diameter.~~ Pipe smaller than four-inches (4") shall be schedule 40 PVC.

~~Color of all pressure pipes for irrigation water shall be purple.~~

Pipe shall be standard dimension ration pressure rated PVC pipe (SDR-RP-PVC) conforming to the latest revision of ASTM D2241 and the National Bureau of Standard Product Standard PS 22-70. The pipe shall be PVC Class 900 pipe shall meet the requirements of ASTM D 2241 except that the pipe shall have an outside diameter of ductile iron pipe sizes instead of iron pipe sizes. The PVC pipe shall meet the requirements of the AWWA C 900 with pressure clasp of ~~15~~200 and the ~~D.R.~~DR of not less than 1~~8~~4. Pipe shall be bell and spigot, twin gasket.

At least 85 per cent of the total footage shall be furnished in standard 20-foot lengths. ~~Piping west of 2000 West. shall be D.R.14 or better~~.

Color of all pressure pipes for irrigation water shall be purple.

Sub-section B. Joints:

Joints shall be push on rubber gasket type. Lubrication shall be water soluble, non-toxic, non-objectionable in taste and odor imparted to the water, non-supporting of bacteria growth, and have no deteriorating effect on the PVC pipe or rubber gaskets.

Jointing of all pipe shall be as recommended by the manufacturer. All pipes shall be handled in such a way so as to prevent damage to the coating and lining. Refer to backfilling specifications for proper bedding

Formatted: Don't hyphenate, Tab stops: 0", Left

and compaction. Thrust blocking shall be applied at all tees, plugs, caps and at bends deflecting 11 1/4 degrees or more~~22 1/2 degrees or more~~. All bolts shall be covered in food grade grease prior to placement of plastic. Prevention of concrete adhesion by means of 12~~0~~ mil plastic sheeting to protect valves or pipe material shall be directed by the City Inspector.

Sub-section C. Fittings:

All fittings to be used with the PVC pipe shall be the same as fittings for ductile iron pipe and shall conform to the provisions of ANSI/AWWA C110/A21.10-82 or C153/A21.53-58. All fittings shall be ~~Mechanical Joint (MJ)~~Restrained Joint ~~-~~or flanged type unless otherwise specified by the Public Works Representative/Engineer.

Sub-section D. Locator Tape:

All pipe shall include a three-inch (3") locator tape installed in the pipeline trench approximately twelve inches (12") below the ground surface. This tape shall be prepared with white or black printing on a purple field, color Pantone 512C, having the words: "CAUTION: IRRIGATION LINE BURIED BELOW"

Sub-section E. Tracer Wire:

All pipe shall include a tracer wire installed at the same elevation as the centerline of the pipe. The wire shall be a 14 gauge solid insulated copper wire. The tracer wire shall be installed adjacent to and paralleling the pipe at a distance of no more than 6" from the outside edge of the pipe. At all tees the wire shall be properly spliced using a grease cap and wire nut or soldering. At all valves the wire shall be brought up into the valve box where it will be easily accessible. The City Public Works department shall oversee the connection points of the locator wire.

Copperhead Industries, LLC Snake Pit 14" Magnetized Tracer Box with purple cast iron top (CHLD14P) shall be installed at the nearest secondary service to each fire hydrant. The top of the tracer box shall match the top back of curb elevation. Tracer wire shall be run from the main with the service and connected to the Test Station.

Section 3A.04 PIPE INSTALLATION:

Sub-section A. Cutting:

Cutting of pipe for closure pieces or for other reasons shall be done in a neat and workmanlike manner by a method recommended by the manufacturer. After cutting, the pipe shall be beveled and filed to prevent gasket damage in joint assembly.

Sub-section B. Dewatering of Trench:

Where water is encountered in the trench, it shall be removed during pipe-laying operations and until the ends of the pipe are sealed. See "Control of Groundwater" in Division 2 Trench - Excavation and Backfill.

Sub-section C. Laying of Pipe:

The pipe and pipe coating (where applicable) shall be inspected for defects before installation. Any defects shall be repaired or the pipe shall be replaced, whichever is deemed necessary by the Public Works Representative/ Engineer.

All pipe shall be laid and maintained to the required lines and grades with fittings and valves at the required locations. The pipes shall be installed with a 30-inch minimum cover from finished road surface for irrigation water. The Developer/Contractor shall be responsible to install the pipe line to the alignment set by the Public Works Director/Engineer or as shown on the Drawings.

All pipe, fittings, and valves shall be moved carefully, either when lowering from the truck, or when placing in the trench. Under no circumstances shall materials be dropped or dumped from the truck or into the trench.

The Developer/Contractor shall take the necessary precautions to ensure that foreign materials do not enter the pipe. No debris, tools, or other materials shall be placed in the pipe during laying operations. When laying of pipe is not in progress, the pipe shall be closed with a water-tight plug.

Maximum deflections at pipe joints shall not exceed the joint specifications of AWWA C600 of latest revision, or the recommendations of the pipe manufacturer.

Deflections in PVC pipe shall be made by longitudinal bending of the barrel of the pipe rather than deflecting the pipe joints. Longitudinal bending shall be limited to eighty percent (80%) of the manufacturer's recommended maximum bending radius.

Temporary support, adequate protection and maintenance of all underground and surface utility structures, drains, sewers and other obstructions encountered in the progress of the work shall be furnished by the Contractor at his own expense under the direction of the inspector.

Wherever existing utility structures or branch connections leading to main sewers or to main drains, or other conduits, ducts, pipes, or structures present obstruction to the grade and alignment of the pipe, they shall be permanently supported, removed, relocated or reconstructed by the Contractor through cooperation with the City. In those instances where their relocation or reconstruction is impracticable, a deviation from line and grade will be ordered, and the change shall be made in the manner directed by the Engineer. Connections to private residences shall be cut and looped around the pipe line.

Unless otherwise directed, pipe shall be laid with bell ends facing the direction of laying, and for lines on an appreciable slope, bells shall, at the discretion of the Engineer, face upgrade.

Pipe shall be laid so as to drain back into the main system when system is out of service. Additional drain lines or blow off valves will be required where gravity draining may not be possible.

Sub-section D. Pipe Bedding:

All pipes shall be protected from lateral displacement and possible damage resulting from impact or unbalanced loading during backfilling operations by being adequately bedding. In the event trench materials are not, in the judgment of the Public Works Representative/Engineer, satisfactory for pipe bedding, imported granular bedding will be required. See Division 2 of these specifications.

Sub-section E. Thrust Blocking:

Thrust blocking shall be applied at all tees, valves, plugs, caps, and at bends that deflect 11 1/4 degrees or mor~~twenty-two and one-half (22 1/2°) degrees or more~~. The fitting shall be encased in a 12 mil protective plastic wrap before the thrust block is poured. Reaction blocking shall be concrete, having a compressive strength of not less than three-thousand (4~~3~~000) psi at twenty-eight (28) days. Blocking shall be placed between undisturbed soil and the fitting to be anchored. The area of bearing on the pipe and on the ground shall be as shown in the Drawings. The blocking shall be placed so that the pipe and the fittings will be accessible for repair.

Sub-section F. Connections to Existing Water Lines:

Information on the Drawings regarding existing water lines is taken from "record" drawings from the city or utility company files and may or may not be accurate as to size, type of material, or location of those lines. The Developer/Contractor will be responsible to determine the proper fittings and materials required, obtain the Public Works Representative/Engineer's approval of the planned connection, and perform the construction in a suitable fashion.

Sub-section G. Replacement of Damaged Material:

Any material that becomes damaged shall be replaced by the Subdivider at his own expense.

Sub-section H. Responsibility for Safe Storage:

The Developer/Contractor shall be responsible for the safe storage of material furnished by or to him, and accepted by him, and intended for the work, until it has been incorporated in the completed project.

Section 3A.05 PRESSURE IRRIGATION SERVICE CONNECTION:

Pressure irrigation service laterals shall be constructed with materials specified and at the locations shown on the Standard Drawings or at the actual location established during construction. This section covers the installation of the service connection from the main to right-of-way line.

Sub-section A. Service Saddle Specifications:

(For use with AWWA C-900 C1 O.D. for PVC plastic pipe.)

All service clamps shall be brass O.D. control saddle or brass double strap tapping saddle for PVC mains, or direct tap (with CC Thread) O.D. sized for ductile iron mains.

A rigid liner shall be used inside of tubing at the compression fitting on all service connections.

All service clamps shall be manufactured of brass cast in conformance to AWWA C-800, General Section - 1, Paragraph 1.2 (ASTM B-62).

The two sides of the clamp shall be held together by high quality Silicon Bronze Hex Bolts (in sizes 1" and over) or Silicon Bronze Slotted Screws (in sizes under 1"), no dis-similar metals shall be allowed at this point thus eliminating the possibility of galvanic corrosion.

Sub-section B. Polyethylene Tubing:

Pipe for the transmission of irrigation water from main to utility box and from the utility box to the homeowner's property line shall be Polyethylene CTS tube. Polyethylene CTS tube shall be manufactured in accordance with the standard specification for Polyethylene (PEP plastic tubing as issued by the American Standard for Testing and Materials under ASTM D 2737 and AWWA C-901.

Material designation code:Polyethylene: PE 3408

Plastic Extrusion Compound: Type III, class C, Grade 34, as defined by ASTM D 1248

Standard pipe dimension ratio CTS (SDR) 9 - 200-psi pressure rating.

All tubing for service lines shall be cut and installed in a neat and workmanlike manner by a method recommended by the manufacturer. No joints will be allowed under sidewalks or other paved surfaces.

Tubing shall be WESTFLEX PE 3408 Gold Label or equivalent.

Sub-section C. Compression Connection:

(a) The interior surface of the coupling nut, including threads, shall have a baked on, fluorocarbon coating to reduce assembly friction and prevent the gasket from turning and twisting during tightening. The nut shall bottom on a cast or machined shoulder on the body when properly assembled. This design will provide a visual check to assure connection is properly assembled.

(b) The sealing gasket shall be of molded synthetic rubber (ASTM D-2000) with molded in place bronze spring (ASTM A-134 Alloy #6) to eliminate the possible cold flow of the gasket between the pipe and fitting. A gripper band of hardened stainless steel (ANSI Type 401) shall be fitted into the gasket. When the gasket is compressed it will cause the gripper ring to distort the pipe giving the fitting a high resistance to pull out. The gripper band shall overlap itself to prevent cold flow of the gasket into the cavity under the band.

(c) When compression fittings are used with P.E. Pipe, Stainless Steel pipe stiffeners are required to eliminate cold flow of plastic pipe.

(d) All fittings are to be for CTS Polyethylene pipe.

(e) The Minimum pull out load for the fitting when used with PE plastic pipe shall be as follows for each given size:

SIZE	MINIMUM PULL OUT (FT.LBS.)
¾”	400
1”	400
1 1/2”	500
2"	500

MUELLER 110 COMPRESSION COUPLINGS AND FITTINGS OR EQUIVALENT ARE TO BE USED ON ALL P.E. PLASTIC PIPE INSTALLATIONS.

Sub-section D. Service Fittings:

All service fittings shall be brass tees, and brass ells or equivalent.

Sub-section E. Mark II Ori-Seal Valve:

These valves shall be closed bottom design and sealed against external leakage at the top by means of a non-adjustable resilient pressure actuated seal, and shall be provided with a secondary resilient seal disposed above the pressure seal for added protection of the bearing surfaces against ground water infiltration. Shutoff shall be affected by a resilient pressure actuated seal so disposed in the key (or plug) as to completely enclose the inlet body port (flow way), in the closed position. All Curb valves shall be quarter turn valves and the fully open and closed positions shall be controlled by check lugs that are integral parts of the key and body. The maximum pressure rating shall be 165-PSI water at a maximum temperature of 180 degrees Fahrenheit.

All fittings are to be CTS Size, used on CTS (Copper Tube Size) Polyethylene pipe. No IPS polyethylene pipe or fittings are to be used.

Curb stop valves shall be MUELLER H-1512-2, 110 COMPRESSION by FIP thread.

Sub-section F. Service Box:

Service box shall be a metal box with a lid saying “Irrigation”. Service Box shall be installed over the Ori-Seal valve and hose bib. A sign shall be attached or embossed to or on the cover indicating as follows: "IRRIGATION" or “WATER.” Box shall be D&L Suply M9150 or Tyler Union 6500 or equal utility box.

Sub-section G. Service Pipe Installation:

The copper service pipe shall be installed by use of a boring method that is approved by the Public Works Director/Engineer under all existing concrete and paved surfaces. Where subsurface materials or conditions will not permit installation by this method, open trenching will be permitted with the approval of the Public Works Representative/Engineer. Open trenching will be used in new streets not yet paved.

Section 3A.06 TESTING AND FLUSHING:

All newly laid pipes or any valved section thereof shall be subjected to a hydrostatic pressure test. A leakage test shall be conducted concurrently with the pressure test. All new lines, and extensions therefrom, shall be flushed thoroughly before being placed into service.

Sub-section A. Pressure Test:

If the pipe section being tested includes concrete thrust blocking, the concrete shall be allowed at least twenty-four (24) hours to set before any testing is conducted.

(a) Pressure During Test. After the pipe has been laid and partially backfilled, all newly laid pipe, or any valved section of it shall, unless otherwise specified, be subjected to maximum operating pressure.

(b) Duration of Pressure Test. The duration of each pressure test shall be at least 120 minutes at 200 psi. If service connections are installed then 150 psi. shall be allowed at 120 minutes.

(c) Procedure. Each valved section of pipe shall be slowly filled with water and the specified test pressure, measured at the point of lowest elevation, shall be applied by means of a pump connected to the pipe in a satisfactory manner. The pump, pipe connections and all necessary apparatus shall be furnished by the Contractor.

(d) Expelling Air before Test. Before applying the specified test pressure, all air shall be expelled from the pipe. To accomplish this, taps shall be made, if necessary, at points of highest elevation, and afterward tightly plugged.

1. Test Pressure Restrictions:

Test pressures shall:

a) Not be less than 150 psi pressure at the highest point along the test section.~~Be at least 1.5 times the working pressure at the highest point along the test section, but not less than 150 psi.~~

b) Not exceed the pressure rating of the pipe.

c) Be of at least 2 hour duration.

d) Not vary by more than plus or minus five (± 5) psi for the duration of the test.

e) Not exceed twice the rated pressure of the valves or hydrants when the pressure boundary of the test section includes closed gate valves or hydrants.

f) Not exceed the rated pressure of the valves when the test boundary of the test section includes closed, resilient-seated gate valves or butterfly valves.

2. Pressurization:

Each valved section of pipe shall be filled slowly with water to the specified test pressure. Pressurization of the pipe shall be based on the elevation of the lowest point of the line or section under test and corrected to the elevation of the test gage. Pressure shall be applied by means of a pump connected to the pipe in a manner satisfactory to the Public Works Representative/Engineer.

3. Air Removal:

Before applying the specified test pressure, air shall be expelled completely from the pipe, valves, and hydrants. If permanent air vents are not located at all high points, the Developer/Contractor shall install corporation cocks at such points so that the air can be expelled as the line is filled with water. After all the air has been expelled, the corporation cocks shall be closed and the test pressure applied. At the conclusion of the pressure test, the corporation cocks shall be removed and plugged.

4. Examination:

All exposed pipe, fittings, valves, hydrants, and joints shall be examined carefully during the test. Any damaged or defective pipe, fittings, valves, or hydrants that are discovered during the pressure test shall be repaired or replaced with sound materials and the test shall be repeated. Repairs or replacements to the pipeline and subsequent pressure testing shall be repeated as necessary for the pipeline to pass the pressure test.

Sub-section B. <u>Leakage Test:</u>

A leakage test shall be conducted concurrently with the pressure test.

1. Leakage defined:

Leakage shall be defined as the quantity of water that must be supplied into the newly laid pipe, or any valved section thereof, to maintain pressure within 5 psi of the specified test pressure after the air in the pipeline has been expelled and the pipe has been filled with water.

2. Allowable leakage:

No pipe installation will be accepted if the leakage is greater than that determined by the following formula:

$$L = \frac{SD(P)^{0.5}}{133,200}$$

in which L is the allowable leakage, in gallons per hour; S is the length of pipeline tested in feet; D is the nominal diameter of the pipe, in inches; and P is the average test pressure (gage) during the leakage test, in pounds per square inch. See Table 1.

a) Allowable leakage at various pressures is shown in Table 1.

b) When testing against closed metal-seated valves, an additional leakage per closed valve of 0.0078 gal/hr/in. of nominal valve size shall be allowed.

c) When hydrants are in the test section, the test shall be made against the closed hydrant.

TABLE 1: Allowable Leakage per 1000 ft of Pipeline - gph

Avg. Test Pressure *psi (Bar)*	Nominal Pipe Diameter—*in.*															
	3	4	6	8	10	12	14	16	18	20	24	30	36	42	48	54
450 (31)	0.48	0.64	0.95	1.27	1.59	1.91	2.23	2.55	2.87	3.18	3.82	4.78	5.73	6.69	7.64	8.60
400 (28)	0.45	0.60	0.90	1.20	1.50	1.80	2.10	2.40	2.70	3.00	3.60	4.50	5.41	6.31	7.21	8.11
350 (24)	0.42	0.56	0.84	1.12	1.40	1.69	1.97	2.25	2.53	2.81	3.37	4.21	5.06	5.90	6.74	7.58
300 (21)	0.39	0.52	0.78	1.04	1.30	1.56	1.82	2.08	2.34	2.60	3.12	3.90	4.68	5.46	6.24	7.02
275 (19)	0.37	0.50	0.75	1.00	1.24	1.49	1.74	1.99	2.24	2.49	2.99	3.73	4.48	5.23	5.98	6.72
250 (17)	0.36	0.47	0.71	0.95	1.19	1.42	1.66	1.90	2.14	2.37	2.85	3.56	4.27	4.99	5.70	6.41
225 (16)	0.34	0.45	0.68	0.90	1.13	1.35	1.58	1.80	2.03	2.25	2.70	3.38	4.05	4.73	5.41	6.03
200 (14)	0.32	0.43	0.64	0.85	1.06	1.28	1.48	1.70	1.91	2.12	2.55	3.19	3.82	4.46	5.09	5.73
175 (12)	0.30	0.40	0.59	0.80	0.99	1.19	1.39	1.59	1.79	1.98	2.38	2.98	3.58	4.17	4.77	5.36
150 (10)	0.28	0.37	0.55	0.74	0.92	1.10	1.29	1.47	1.66	1.84	2.21	2.76	3.31	3.86	4.41	4.97
125 (9)	0.25	0.34	0.50	0.67	0.84	1.01	1.18	1.34	1.51	1.68	2.01	2.52	3.02	3.53	4.03	4.53
100 (7)	0.23	0.30	0.45	0.60	0.75	0.90	1.05	1.20	1.35	1.50	1.80	2.25	2.70	3.15	3.60	4.05

*If the pipeline under test contains sections of various diameters, the allowable leakage will be the sum of the computed leakage for each size.
**To obtain leakage in liters/hour, multiply the values in the table by 3.785.

3. Examination:

All exposed pipe, fittings, valves, hydrants, and joints shall be examined carefully during the test. Any damaged or defective pipe, fittings, valves, or hydrants that are discovered during the leakage test shall be repaired or replaced with sound materials and the test shall be repeated. Repairs or replacements to the pipeline and subsequent leakage testing shall be repeated as necessary for the pipeline to pass the leakage test.

Sub-section C. <u>Acceptance of Installation:</u>

Acceptance shall be determined on the basis of allowable leakage. If any test of pipe laid discloses leakage greater than specified, the Developer/Contractor shall, at its own expense, locate and repair the defective material until the leakage is within the specified allowance. All visible leaks are to be repaired regardless of the amount of leakage.

Sub-section D. <u>Flushing:</u>

Flushing shall be accomplished through temporary flushing valves, or end of line blow-off assemblies at a minimum flushing velocity of two and one-half feet per second (2.5 fps). Flow volumes to produce this velocity are shown in the following chart:

FLOW RATE AND OPENINGS TO FLUSH PIPELINES
(40 psi Residual Pressure)

Pipe Size (inches)	Flow Required to Produce 2.5 fps velocity (gpm)
2	26
4	100
6	220

8	390
10	610
12	880
14	1,200
16	1,565
18	1,980
20	2,450
24	3,525
30	5,507
42	10,800
48	14,100

Section 3A.07 PRESSURE IRRIGATION DRAINS:

When system drains are necessary to be installed on extensions of the pressure irrigation system they shall be constructed as a system drain to a curb inlet box or system drain to a storm drain pipe**.** The drain shall be constructed as shown on the Standard Drawings. The materials used shall meet the requirements of Division 3A, Pressure Pipe Pressure Irrigation. The connection to the box or pipe shall be by coring a hole and grouting the drainpipe in. A non-shrink grout shall be used.

When a section of pressure irrigation pipeline has to be laid such that there is a belly in it then a local drain sump will need to be constructed. The drain shall be constructed as shown on the Standard Drawings. The materials used shall meet the requirements of Division 3A, Pressure Pipe Pressure Irrigation, Division 4, Concrete Pipe, and Division 5, Manholes.

DIVISION 4: CONCRETE PIPE

Section 4.01 GENERAL:

This section covers the requirements for concrete pipe materials and installation in storm drain, and other gravity line construction.

Section 4.02 PIPE:

Concrete pipe used in sewer line, storm drain line and other gravity line construction shall be reinforced concrete pipe or non-reinforced concrete pipe, as required by design loading and fill heights and as follows:

Sub-section A. Reinforced Concrete Pipe:

All reinforced concrete pipe used in the construction shall be of the rubber gasket type, bell and spigot joint design. Reinforced concrete land drain pipe shall conform to the requirements for "Reinforced Concrete Pipe: ASTM Designation C 75556. Cement used in the pipe shall conform to Type 11A, (the air entraining agent shall be inter-ground at the mill), low alkali cement, conforming to Federal Specifications, 192a, of ASTM Designation C-15C-53. Pipe class shall be as shown on the Drawings. The minimum joint length of all pipes provided shall be 7 1/2 feet. All pipe 12-inch diameter and larger shall be reinforced concrete.

Sub-section B. Non-Reinforced Concrete Pipe:

Non-reinforced concrete land drain pipe shall conform to Concrete Pipe ASTM Designation C 14.

Sub-section C. Bell and Spigot Joints:

Pipe for rubber gasket joints shall be of the bell and spigot type conforming to the requirements of the latest revision of ASTM Designation C-44. A detail of the type the contractor proposes to use shall be furnished and must have the approval of the City Engineer before the work is to be commenced. The joint shall be so designed as to provide for self-centering and when assembled, to compress the gasket to form a water tight seal. The pipe design and gasket shall be such that movement of the pipe or hydrostatic pressure cannot displace the gasket. In order to assure water-tightness the clearance between the inner surface of the bell and the outer surface of the spigot, as well as the dimensional tolerances of this annular space, shall be such that the gasket residual deformation is neither less than 20% nor more than 45% when the spigot is seated to the full depth of the bell socket.

The rubber gasket for use on pipe shall be cured in such a manner that any cross section will be dense, homogeneous, and free from porosity and other imperfections. The gasket shall be extruded or molded to the specific size within a tolerance of plus or minus 1/32 of an inch at any cross section of the gasket. The gasket shall be fabricated from a high-grade tread-type compound. The basic polymer shall be natural rubber, or a copolymer of butadiene-styrene synthetic. The compound shall contain no factice and shall have the following characteristics:

Tensile strength, pounds per square inch, minimum	2,300
Elongation at break, percent, minimum	425
Shore Durometer (Type A)	40-60
Absorption of Waster, by weight, 2 days at 70 degree C, percent maximum	5
Compression set (constant deflection), percent of original, deflection, maximum	20
Tensile strength after oxygen bomb aging (48 hours, 158 degrees F, 300 per square inch), percent of tensile strength before aging, minimum	80
Increase in Shore durometer hardness after oxygen bomb , maximum increase over original Shore Duromoter aging	8
Acetone, extract, percent, maximum	15

The physical properties of the rubber compound shall be determined by tests performed in accordance with appropriate section of Federal Specifications ZZ-R-601a, except for Shore Durometer and compression set. All tests for compression set shall be made in accordance with method B, ASTM Designation D395 for compression set of vulcanized rubber under constant deflection. Tests for Shore Durometer shall be made in accordance with ASTM Designation D767. The contractor shall furnish certified copies of test reports as evidence of the rubber compound used in all rubber gaskets before any gaskets are used to join pipes. All rubber shall be stored in as cool a place as practicable, preferably at 70 degrees or less, and in no case shall the rubber for joints be stored exposed to the direct rays of the sun. All rubber gaskets shall be stored so as to permit free circulation of air about the rubber.

In all cases during the laying of the pipe extreme care must be taken to ensure that the rubber gaskets are properly fitted in place and continually free from twisting and unusual displacement.

Sub-section D. <u>Minimum Size and Slope Requirements:</u>

In no case shall storm sewer mains be less than fifteen (15) inches in diameter. Storm sewer drains shall be laid with uniform slope between manholes. All Storm sewer drains shall be designed and constructed to give mean velocities of not less than 2 feet per second when flowing full, based on Manning's formula using an n value of 0.013.

Whenever possible the slope should exceed 0.005ft/ft (0.5%). The pipe should be sized to meet anticipated hydraulic loads, increasing the pipe size to reduce the minimum slope requirements shall not be allowed. Storm sewer slopes shall not exceed 0.12 ft/ft (12%). Drop manholes shall be used when steeper slopes are needed, drop manholes shall be used to keep line grade below maximum grade allowed. Any exceptions shall be approved by Public Works/ Engineer.

Section 4.03 PIPE LAYING:

No pipe shall be laid under any circumstances until the pipe has been tested, and the samples selected have satisfactorily passed the requirements. All concrete pipe installation shall proceed upgrade with the bell end of the pipe upgrade on a stable foundation, with joints closely and accurately fitted. Rubber gaskets shall be fitted properly in place, and care shall be taken in joining the pipe units to avoid twisting of gaskets. Joints shall be clean and dry, and a joint lubricant as recommended by the pipe supplier shall be applied uniformly to the mating joint surfaces to facilitate easy positive joint closure.

A shallow excavation shall be made underneath the pipe at the joint, this space to be filled with mortar, into which the end of the second pipe beds when laid. The groove end of the first pipe must be thoroughly cleaned with a wet brush and a layer of soft mortar applied to the inside of the groove. The tongue end of the second pipe must be thoroughly cleaned with a wet brush and while in a horizontal position a layer of soft mortar is then inserted into the groove end of the first pipe until the mortar is squeezed out on the interior and exterior surfaces. The interior surface of the pipe joint over 18 inches in diameter shall be brushed smooth and under 18 inches in diameter wiped smooth.

Pipe shall be installed with uniform bearing under the full length of the barrel, with suitable excavations being made to receive pipe bells.

Select material shall be compacted around the pipe to firmly bed the pipe in position. All adjustments to grade shall be made by scraping away or tamping earth under the pipe. Wedging or blocking under the hub will not be permitted. If adjustment of position of a pipe length is required after being laid, it shall be removed and re-jointed as for a new pipe. When laying is not in progress, the ends of the pipe shall be closed with a tight-fitting stopper to prevent the entrance of foreign material.

In addition to the above requirements, all pipe installation shall comply with the specific requirements of the pipe manufacturer.

Section 4.04 GRAVEL FOUNDATION FOR PIPE:

Wherever the subgrade material does not afford a sufficiently solid foundation to support the pipe and superimposed load, or where groundwater must be drained, the subgrade shall be excavated to such depth as may be necessary and replaced with crushed rock or gravel compacted into place. Gravel for concrete pipe foundation shall be clean crushed rock or gravel with one hundred percent (100%) passing a one-inch (1") screen and five percent (5%) passing a No. 4 sieve.

Section 4.05 INSTALLATION REQUIREMENTS FOR LINE AND GRADE:

All concrete pipe shall be installed accurately to the defined line and grade with the following limits:

Variance from established line and grade shall not be greater than one-sixteenth (1/16) inch per inch of pipe diameter in ten feet, and not to exceed one-half inch in ten feet, provided that such variation does not result in a level or reverse sloping invert; provided also that variation in the invert elevation between adjoining ends of pipe, due to non-concentricity of joining surface and pipe interior surfaces, does not exceed one-sixty-fourth (1/64) inch per inch of pipe diameter, or one-half (1/2) inch maximum.

Section 4.06 PIPE BEDDING:

All pipes shall be protected from lateral displacement and possible damage resulting from impact or unbalanced loading during backfilling operations by being adequately bedded.

A groove shall be excavated in the bottom of the trench to receive the bottom quadrant of the pipe. Before preparing the groove, the trench bottom shall be excavated or filled and compacted to an elevation sufficiently above the grade of the pipe so that, when completed, the pipe will be true to line and grade. Bell holes shall be excavated so that only the barrel of the pipe receives bearing from the trench bottom.

Pipe bedding materials placed at any point below the mid-point of the pipe shall be deposited and compacted in layers not to exceed ten-inches (10") in uncompacted depth. Deposition and compaction of bedding materials shall be done simultaneously and uniformly on both sides of the pipe. Compaction shall be accomplished with hand or mechanical compactors. All bedding materials shall be placed in the trench in such a manner that they will be scattered alongside the pipe and not dropped into the trench in compact masses. Bedding materials shall be loose earth, free from lumps; sand or gravel, free from rocks larger than two-inch (2") diameter. All materials shall be free from roots, sod, or other vegetable matter.

In the event trench materials are not satisfactory for pipe bedding, modified bedding will be required. Modified bedding shall consist of placing compacted granular material on each side of and to the level of twelve-inches (12") above the top of the pipe.

Modified bedding material shall be graded as follows: One-hundred percent (100%) passing a one and one-half inch (1-1/2") screen and five percent (5%) passing a No. 4 sieve. Pea gravel is not allowed in any part of the trench.

Section 4.07 BACKFILL:

Sub-section A. <u>Granular Fill:</u>

Limit maximum particle size to 6 inches. Place fill per APWA Section 33 05 20. Compact to a modified proctor density of 95 percent or greater. Maximum lift thickness is 8 inches before compaction. Do not use clay without ENGINEER's review and acceptance. Water jetting is NOT allowed in backfilling operation.

Sub-section B. <u>Flowable Fill:</u>

Where required by city, or state agency, provide and place controlled low strength material per APWA Section 31 05 15. Cure the fill before placing surface restorations.

Sub-section C. Landscape Restoration:

Provide landscaped surfaces with topsoil. Rake to match existing grade. Replace vegetation to match pre-construction conditions. See APWA Section 32 92 00 or APWA Section 32 93 13 requirements.

Sub-section D. Pavement Restoration:

Do not install asphalt or concrete surfacing until trench compaction is accepted by Engineer.

Sub-section E. Pea Gravel:

Pea gravel is not allowed in any part of the trench.

Section 4.08 TESTS:

Random samples of pipe and all fittings and specials such as short radius bands, wyes, and tees shall be tested as specified for the type of pipe being used.

The Developer/Contractor will be required to conduct an air test or infiltration test and displacement test in the presence of the Public Works Director/Engineer or his representative. Camera all mains giving a video copy to the Public Works Representative/Engineer. If these tests prove to be inconclusive, any or all of the other required tests shall be conducted in the presence of the Public Works Director/Engineer or his representative. Tests shall be performed as follows:

Sub-section A. Displacement Test:

In conducting the displacement test a light will be flashed between manholes or, if the manholes have not as yet been constructed, between the locations of the manholes, by means of a flashlight or by reflecting sunlight with a mirror. If the illuminated interior of the pipe shows broken, misaligned or displaced pipe or other defects, the defects designated by the Public Works Director/ Engineer shall be remedied at the Developer/Contractor's expense.

Sub-section B. Infiltration Test:

The Developer/Contractor shall furnish labor, equipment, and materials, including pumps, and shall perform the infiltration tests of the completed line in the presence of the Public Works Director/Engineer before it can be placed into service. The Developer/Contractor shall furnish and install the measuring weirs or other measuring devices. The length of line to be tested at any time shall be subject to the approval of the Public Works Representative/Engineer. The maximum allowable infiltration shall not exceed two-hundred- (200) gallons per inch diameter per mile per twenty-four hours (24 hrs.) for all installed pipe. If the quantity of infiltration is in excess of the maximum allowable, the leaking joints shall be repaired to the satisfaction of the Public Works Director/Engineer at the expense of the Developer/Contractor.

Sub-section C. Exfiltration Test:

The Developer/Contractor shall furnish labor, equipment, and materials, including pumps, and shall perform the ex-filtration tests of the completed line in the presence of the Public Works Director/Engineer before it can be placed into service. The length of line to be tested at one time shall be limited to the length between adjacent manholes. The maximum allowable ex-filtration shall not exceed two-hundred (200) gallons per inch diameter per mile per 24 hours for all installed pipe. The end of the line which projects into the manhole shall be plugged. The pipe shall then be filled with water from the upper manhole, and the line maintained under a light pressure of four feet (4') of head. The inflow of water necessary to maintain this head shall be recorded as the leakage of the system. If the quantity of ex-filtration is in excess of the maximum

allowable, the leaking joints shall be repaired to the satisfaction of the Public Works Director/Engineer at the expense of the Developer/Contractor.

Sub-section D. TV Inspection:

The Developer/Contractor shall furnish labor, equipment, and materials, including pumps, etc. and shall assist Public Works Director/Engineer in making a TV inspection of mains. The line shall be filled with sufficient water to fill any low spots or "bellies" to establish low flow line. A color, sewer type "TV" camera will then be used to inspect and record the condition of the entire installation. A video recording and written log of this inspection shall then be given to the Public Works Director/Engineer at the conclusion of the inspection. This video recording shall be a continuous run and free from pauses and/or editing. It shall contain a reference to the line being inspected, it shall also include the date of inspection and a running footage of the line. The written log shall contain the following information; name, address, phone numbers of contractor performing the inspection, the name of the person performing inspection, the date and time of inspection, the line being inspected, footages and a description of any laterals, "bellies", low spots, debris, defects, damage, roots, imperfections, or other findings. This inspection shall be done with the Public Works Director/Engineer present. No inspection, or record thereof, will be accepted without the Public Works Director/Engineer present during inspection. The contractor/sub-contractor performing the inspection shall be subject to acceptance by the Public Works Representative/ Engineer. Any problems that are found shall be repaired/corrected and re-inspected at the expense of the Contractor/Developer, to the satisfaction of the Public Works Representative/Engineer, before line can be placed in service.

Section 4.09 MANHOLE CONNECTIONS:

Concrete pipe connections to manholes shall be achieved by use of manhole coupling adapters, rubber gaskets, positive seal gasket system with 300 series nonmagnetic corrosion-resistant steel bands, or grouting a bell or spigot pipe at the appropriate locations. Connections shall meet the requirements of Division 5 MANHOLES.

Sub-section A. Connection to Main:

Connections to a Storm Drain system shall be done through either adding a new manhole or connecting to an existing manhole. Any connection to an existing manhole shall not have flow that will exceed the capacity of the existing system. Connections shall be made as shown on the Standard Drawing and at the location specified herein, shown on the improvement drawings or as staked in the field.

Sub-section B. Damage and Repair of Mains and Appurtenances:

The Developer/Contractor shall be responsible for the protection of existing improvements, and any damage resulting from its operations shall be its sole responsibility. Damage to the mains, laterals, or appurtenances shall be repaired by acceptable and approved methods.

DIVISION 4A: PVC PLASTIC PIPE

Section 4A.01 GENERAL:

This section covers the requirements for PVC plastic sewer pipe materials and installation in sanitary sewer, land drain, and other gravity line construction.

All materials shall be new and shall be protected from any long exposure to the sun. The pipe shall be as uniform as commercially practical in color, density, and other physical properties.

Sub-section A. Certification

When agreed upon in writing by the purchaser and the seller the certification shall be made the basis of the acceptance of the material. This shall consist of a copy of the manufacturers test report or a statement by the seller, accompanied by a copy of the test results, that the material has been sampled, tested, and inspected in accordance with the provisions of the specification. Each certification so furnished shall be signed by an authorized agent of the seller or manufacturer. Copies will be furnished to the City.

Sub-section B. Marking

Pipes in compliance with this standard shall be clearly marked at intervals of five feet (5 ft) or less. The marking on SDR-35 shall be: (1) Mfg's Quality; (2) Nominal Pipe Size; (3) PVC 12454-B; (4) SDR-(number); (5) PSP Sewer Pipe; (6) Appropriate ASTM Number; (7) Extrusion Code

Section 4A.02 PIPE:

PVC gravity pipe and fittings shall conform to ASTM D-3034, for diameters from four-inch (4") to fifteen-inch (15") and ASTM F-679 for eighteen-inch (18") to twenty-seven-inch (27"), with integral bell gasket joints. Rubber gaskets shall be factory installed and conform to ASTM F-477. Pipe shall be made of PVC plastic having a cell classification of 12454A or 13364B (with minimum tensile modulus of 500,000 PSI) as defined in ASTM D-1784 and shall have a SDR of 35 and minimum pipe stiffness of 46PSI according to ASTM test D-2412. Pipe shall be installed in compliance with ASTM D-2321 and the manufacturer's requirements

Sub-section A. Minimum Size and Slope Requirements:

In no case shall mains be less than eight inches in diameter. Sewers shall be laid with uniform slope between manholes. All sewers shall be designed and constructed to give mean velocities of not less than 2 feet per second when flowing full, based on Manning's formula using an n value of .013. Absolute minimum slope allowed shall be those published by the Utah Department of Environmental Quality, Division of Water Quality as Administrative Rules for Design Requirements for Wastewater Collection, Treatment and Disposal System, R317-3, **Table R317-3-2.3 (D)(4) Minimum Slopes**.

Whenever possible the slope should exceed 0.005 ft/ft (0.5%). The pipe should be sized to meet anticipated hydraulic loads, increasing the pipe size to reduce the minimum slope requirements shall not be allowed. Sewers on slope 3:1 (33.3%) or steeper shall be anchored immediately downstream from bells with concrete anchors or approved equal as follows:

A. Not over 24 feet center-to center on slopes 3:1 to 2:1 (33.3% to 50%.)
B. Not over 16 feet center-to-center on slopes steeper than 2:1 (50%.)

All sewer lateral piping shall be identified as green in color and all land drain laterals shall be identified as white in color.

Section 4A.03 FITTINGS:

Fittings shall be made of PVC plastic conforming to ASTM D-1784 and a cell classification as outlined in ASTM D-3034.

Section 4A.04 PIPE LAYING:

All pipe installation shall proceed upgrade with bell end of pipe upgrade on a stable foundation, with joints closely and accurately fitted. Joints shall be clean and dry, and a joint lubricant as recommended by the pipe supplier shall be applied uniformly to the mating joint surfaces to facilitate easy positive joint closure.

Pipe shall be installed with uniform bearing under the full length of the barrel, with suitable excavations being made to receive pipe bells.

Select material (1" drain rock) shall be compacted around the pipe to firmly bed the pipe in position. Haunching material (bed to springline) should be carefully worked under the haunches of the pipe and compacted from the pipe to the trench wall or two and one half (2-1/2) pipe diameters on each side of the pipe to ensure support. If adjustment of position of a pipe length is required after being laid, it shall be removed and re-jointed as for a new pipe. When pipe laying is not in progress, the ends of the pipe shall be closed with a tight-fitting stopper to prevent the entrance of foreign material. In addition to the above requirements, all pipe installation shall rigidly adhere to the specific requirements of the pipe manufacturer.

Section 4A.05 GRAVEL FOUNDATION FOR PIPE:

Wherever the subgrade material does not afford a sufficiently solid foundation to support the pipe and superimposed load, and where groundwater must be drained, the subgrade shall be excavated to such depth as may be necessary and replaced with crushed rock or gravel compacted into place. Gravel for PVC pipe foundation shall be clean crushed rock or gravel with one hundred percent (100%) passing a one-inch (1") screen and less than five percent (5%) passing a No. 4 sieve.

Section 4A.06 INSTALLATION REQUIREMENTS FOR LINE AND GRADE:

All PVC pipe shall be installed accurately to the defined line and grade with the following limits:

> Variance from established line and grade shall not be greater than one-sixteenth (1/16) inch per inch of pipe diameter in ten feet, and not to exceed one-half inch in ten feet, provided that such variation does not result in a level or reverse sloping invert; provided also that variation in the invert elevation between adjoining ends of pipe, due to non-concentricity of joining surface and pipe interior surfaces, does not exceed one-sixty-fourth (1/64) inch per inch of pipe diameter, or one-half (1/2) inch maximum.

Section 4A.07 PIPE BEDDING:

All mains and drains shall be protected from lateral displacement and possible damage resulting from impact or unbalanced loading during backfilling operations by being adequately bedded.

A groove shall be excavated in the bottom of the trench to receive the bottom quadrant of the pipe. Before preparing the groove, the trench bottom shall be excavated or filled and compacted to an elevation sufficiently above the grade of the pipe so that, when completed, the pipe will be true to line and grade. Bell holes shall be excavated so that only the barrel of the pipe receives bearing from the trench bottom.

Pipe bedding materials placed at any point below the mid-point of the pipe shall be deposited and compacted in layers not to exceed ten-inches (10") in uncompacted depth. Deposition and compaction of bedding materials shall be done simultaneously and uniformly on both sides of the pipe. Compaction shall be accomplished with hand or mechanical compactors. All bedding materials shall be placed in the trench with hand tools or other approved method in such a manner that they will be scattered alongside the pipe and not dropped into the trench in compact

masses. Bedding materials shall be loose earth, free from lumps; sand or gravel, free from rocks larger than one-inch (1") diameter; with all materials free from roots, sod, or other vegetable matter.

In the event trench materials are not satisfactory for pipe bedding, modified bedding will be required. Modified bedding shall consist of placing compacted granular material on each side of and to the level of twelve-inches (12") above the top of the pipe.

Modified bedding material shall be graded as follows: One-hundred percent (100%) passing a one and one-half inch (1-1/2") screen and five percent (5%) passing a No. 4 sieve.

Section 4A.08 TESTS:

The Developer/Contractor will be required to conduct an air test, displacement test or TV inspection as per subsection E "TV Inspection" in previous section, in the presence of the Public Works Director/Engineer or his representative. If these tests prove to be inconclusive, any or all of the other required tests shall be conducted in the presence of the Public Works Director/Engineer or his representative. All mains will be camera inspected and videotaped. A copy being given to the Public Works Director. Tests shall be performed as follows:

Sub-section A. Displacement Test:

In conducting the displacement test a light will be flashed between manholes or, if the manholes have not as yet been constructed, between the locations of the manholes, by means of a flashlight or by reflecting sunlight with a mirror. If the illuminated interior of the pipe shows broken, misaligned or displaced pipe or other defects, the defects designated by the Public Works Director/Engineer shall be remedied at the Developer/Contractor's expense.

Sub-section B. Infiltration Test:

The Developer/Contractor shall furnish labor, equipment, and materials, including pumps, and shall perform the infiltration tests of the completed line in the presence of the Public Works Director/Engineer before it can be placed into service. The Developer/Contractor shall furnish and install the measuring weirs or other measuring devices. The length of line to be tested at any time shall be subject to the approval of the Public Works Representative/Engineer. The maximum allowable infiltration shall not exceed two-hundred (200) gallons per inch diameter per mile per twenty-four hours (24 hrs) for all installed pipe. If the quantity of infiltration is in excess of the maximum allowable, the leaking joints shall be repaired to the satisfaction of the Public Works Director/Engineer at the expense of the Developer/Contractor.

Sub-section C. Exfiltration Test:

The Developer/Contractor shall furnish labor, equipment, and materials, including pumps, and shall perform the exfiltration tests of the completed line in the presence of the Public Works Director/Engineer before it can be placed into service. The length of line to be tested at one time shall be limited to the length between adjacent manholes. The maximum allowable exfiltration shall not exceed two-hundred (200) gallons per inch diameter per mile per 24 hours for all installed sewer pipe. The end of the sewer line which projects into the manhole shall be plugged. The pipe shall then be filled with water from the upper manhole, and the line maintained under a light pressure of four feet (4') of head. The inflow of water necessary to maintain this head shall be recorded as the leakage of the system. If the quantity of exfiltration is in excess of the maximum allowable, the leaking joints shall be repaired to the satisfaction of the Public Works Director/Engineer at the expense of the Developer/Contractor.

Sub-section D. Air Testing:

The Developer/Contractor or his representative (a qualified firm or individual agreed upon by the Public Works Director/Engineer and the Developer/Contractor) shall furnish labor, equipment, and materials, including pumps and compressors, and shall perform, in the presence of the Public Works Representative/Engineer, air tests of the completed pipe before it can be placed in service. Each section of

sanitary sewer pipeline between manholes shall be tested after all the service laterals (and plugs) have been installed. Each test section shall be pressurized to a uniform gauge pressure of five (5) pounds per square inch (34.5kPa) or sufficient to balance a column of mercury ten (10 inches (254 mm) in height. The pressure shall be held without introducing additional air for a period of at least fifteen minutes. Failure of the Developer/Contractor's testing equipment to properly function shall render the test unacceptable. All faulty sections of pipeline shall be repaired and re-tested until the minimum air testing requirements have been met.

Sub-section E. <u>TV Inspection:</u>

The Developer/Contractor shall furnish labor, equipment, and materials, including pumps, etc. and shall assist Public Works Director/Engineer in making a TV inspection of mains. The line shall be filled with sufficient water to fill any low spots or "bellies" to establish low flow line. A color, sewer type "TV" camera will then be used to inspect and record the condition of the entire installation. A video recording and written log of this inspection shall then be given to the Public Works Director/Engineer at the conclusion of the inspection. This video recording shall be a continuous run and free from pauses and/or editing. It shall contain a reference to the line being inspected, it shall also include the date of inspection and a running footage of the line. The written log shall contain the following information; name, address, phone numbers of contractor performing the inspection, the name of the person performing inspection, the date and time of inspection, the line being inspected, footages and a description of any laterals, "bellies", low spots, debris, defects, damage, roots, imperfections, or other findings. This inspection shall be done with the Public Works Director/Engineer present. No inspection, or record thereof, will be accepted without the Public Works Director/Engineer present during inspection. The contractor/sub-contractor performing the inspection shall be subject to acceptance by the Public Works Representative/Engineer. Any problems that are found shall be repaired/corrected and re-inspected at the expense of the Contractor/ Developer, to the satisfaction of the Public Works Representative/Engineer, before line can be placed in service.

Section 4A.09 MANHOLE CONNECTIONS:

The maximum distance between manholes shall be 400'. PVC pipe connections to manholes shall be achieved by use of manhole coupling adapters, rubber gaskets, or positive seal gasket system with 300 series nonmagnetic corrosion-resistant steel bands. PVC may not be grouted directly to concrete. Connections shall meet the requirements of Division 5 MANHOLES.

Section 4A.10 SEWER LATERAL CONNECTIONS:

All sewer lateral connections onto new sewer mains shall be made through preformed tee fittings installed in the main line at the time of main line installation.

Connections onto existing sewer mains shall be made with field installed service saddles (gasketed and clamped). All connections by field installed service saddles on existing sewer mains shall be done with a sewer tapping machine and all required fittings and materials. Connections shall be made as shown on the Standard Drawing and at the location specified herein, shown on the improvement drawings or as staked in the field.

Section 4A.11 SEWER SERVICE LATERALS

New service laterals shall be constructed with materials and procedures as specified herein.

Existing service laterals shall be constructed with materials compatible with the existing laterals with appropriate connections for joining the ends of existing laterals. All laterals shall be four-inch (4") in diameter unless shown otherwise. Tracer wire shall be installed above each new service lateral.

Sub-section A. Extent of Laterals and Location of Laterals:

Service laterals shall extend from the sewer main to a point ten-foot (10') beyond the street right-of-way line unless shown or staked otherwise. Service laterals shall also be a minimum of ten feet (10') away from the culinary water service lateral. A two-inch (2") by four-inch (4") by six-foot (6') marker, with the top twelve-inches (12") painted green, shall be installed to clearly mark the end of each lateral line. In addition to the marker, the Developer/Contractor shall station (give a distance) the location of the lateral connection to the main from the nearest downstream manhole. Laterals shall be capped with a cap suitable to withstand test pressure and prevent any leakage into or out of the lateral.

When an existing sewer lateral is encountered along the line and grade of a new pipeline it shall be relocated using appropriate pipe and fittings and graded to insure adequate slope to drain properly. Minimum slope shall be one-quarter-inch (1/4") per foot (2%).

In compliance with Utah Code Title 54, Chapter 8a, the following requirements must be achieved:

1. An excavator must have property owner's permission to access or enter the property or dwelling to locate a sewer lateral.
2. The Sewer cleanout cap must be a material that can be easily located with a metal detector (such as a threaded brass cap). The installation or replacement of a sewer cleanout must be visibly positioned at a minimum of two-inches above grade and must be protected from damage.
3. The location of the sewer lateral and cleanout must be documented in an as-built construction drawing and delivered to the city sewer department manager.

Sub-section B. Excavation and Backfill:

Trench excavation and backfill shall conform to the applicable paragraphs of Division 2 and the bedding requirements of this Division.

Sub-section C. Pipe:

Pipe used for new service laterals shall be PVC Plastic Pipe conforming to ASTM D-3034 SDR 35. All sewer lateral piping shall be identified as green in color and all land drain laterals shall be identified as white in color.

Sub-section D. Connection to Main:

Connections to the main shall be made as specified in Section 4A.10 SEWER LATERAL CONNECTIONS. Recommendations of manufacturer of the materials used shall be carefully followed.

Sub-section E. Cover Over Sewer Lateral Lines:

There shall be a minimum of 3 feet of cover over all sewer lateral lines (3'6" minimum at property line.)

Sub-section F. Sewer Clean Outs:

There shall be a maximum distance of 5 feet from the foundation wall to the first exterior clean out with a maximum distance between clean-outs of one hundred (100) feet. There shall be a clean out when a combination of bends is ninety degree (90°) or greater**.** Sewer cleanouts shall be easily located after final grade and improvements, i.e. landscaping, etc., are completed.

Sub-section G. Testing:

The service laterals shall be tested as a part of the sewer main to which they are connected.

Sub-section H. Damage and Repairs of Sewers and Appurtenances:

The Developer/Contractor shall be responsible for the protection of existing improvements, and any damage resulting from its operations shall be its sole responsibility.

Damage to the sewers, laterals, or appurtenances shall be repaired by acceptable and approved methods.

DIVISION 4B: POLYETHYLENE CORRUGATED PIPE

Section 4B.01 GENERAL:

This section covers the requirements for high-density polyethylene corrugated pipe with integrally formed smooth interior for use in storm drains and other gravity line construction.

Section 4B.02 PIPE:

This specification is applicable to nominal sizes 12 - 36 inch diameter. Requirements for test methods, dimensions, and markings are those found in AASHTO Designation M-294.

Pipe and fittings shall be made of polyethylene compounds that meet or exceed the requirements of Type III, Category 4 or 5, Grade P33 or P34, Class C per ASTM Designation D-1248 with the applicable requirements defined in ASTM D-1248. Clean reworked material may be used.

Minimum parallel plate pipe stiffness values at 5% deflection shall be as follows:

Diameter	Pipe Stiffness*	
12"	45 psi	
15"	42 psi	
18"	40 psi	
24"	34 psi	
30"	28 psi	*Per ASTM Test
36"	22 psi	Method D-2412

The pipe and fittings shall be free of foreign inclusions and visible defects. The ends of the pipe shall be cut squarely and cleanly so as not to adversely affect joining.

The nominal size for the pipe and fittings is based on the nominal inside diameter of the pipe. Corrugated fittings maybe either molded or fabricated by the manufacturer. Fittings produced by manufacturers other than the supplier of the pipe shall not be permitted without the approval of the Project Public Works Representative/Engineer. A manufacturers' certification that the product was manufactured, tested, and supplied in accordance with this specification shall be furnished to the Project Public Works Director/Engineer upon request.

Pipe installation shall be in accordance with ASTM Recommended Practice D-2321 and the manufacturer's requirements.

Section 4B.03 JOINTS:

Joints shall be made with split couplings, corrugated to match the pipe corrugations, and shall engage a minimum of 6 corrugations for 12" - 24" diameter and 4 corrugations for 30" and 36" diameter pipe.

Section 4B.04 PERFORATIONS:

All perforated pipe used in the construction shall have either circular or slotted perforations. Circular perforations shall not be more that 5/16 in. nor less than 3/16 in. in diameter, and arranged in rows parallel to the axis of the pipe. Perforations shall be 3 in. center-to-center, along rows. The spigot or tongue end shall not be perforated for a length equal to the depth of the socket, or depth of the groove plus 3/4 in. and perforations shall continue at uniform spacing along the entire length of the barrel. There shall be a total of 8 rows for an 18-inch pipe. The rows shall be spaced over not more than 165 degrees of circumference. Rows shall be symmetrically arranged with respect to the intended top of bottom of the pipe.

Slots shall be circumferential in direction, not more than 3/16 in. or less than 1/8 in. in width, and 3 in. long. The slots shall be spaced 6 in. apart. There shall be two rows of slots, spaced 120° apart. The distance from the spigot end, or from the shoulder of the tongue end, to the first pair of slots shall be not more than 1 in. greater than the specified slot spacing, nor less than 1 in. less than the specified slot spacing. Slots shall continue at uniform spacing along the entire length of the barrel.

Section 4B.05 PIPE LAYING:

All pipe installation shall proceed upgrade on a stable foundation, with joints closely and accurately fitted.

Pipe shall be installed with uniform bearing under the full length of the barrel, with suitable excavations being made to receive pipe joints.

Select material shall be compacted around the pipe to firmly bed the pipe in position. Haunching material (bed to springline) should be carefully worked under the haunches of the pipe and compacted from the pipe to the trench wall, or two and one-half (2-1/2) pipe diameters on each side of the pipe, to ensure support. If adjustment of position of a pipe length is required after being laid, it shall be removed and re-jointed as for a new pipe. When pipe laying is not in progress, the ends of the pipe shall be closed with a tight-fitting stopper to prevent the entrance of foreign material.

In addition to the above requirements, all pipe installation shall rigidly adhere to the specific requirements of the pipe manufacturer.

Section 4B.06 GRAVEL FOUNDATION FOR PIPE:

Wherever the subgrade material does not afford a sufficiently solid foundation to support the pipe and superimposed load, and where groundwater must be drained, the subgrade shall be excavated to such depth as may be necessary and replaced with crushed rock or gravel compacted into place.

Gravel for pipe foundation shall be clean crushed rock or gravel with one hundred percent (100%) passing a one-inch (1") screen and less than five percent (5%) passing a No. 4 sieve.

Section 4B.07 INSTALLATION REQUIREMENTS FOR LINE AND GRADE:

All pipe shall be installed accurately to the defined line and grade with the following limits:

> Variance from established line and grade shall not be greater than one-sixteenth (1/16) inch per inch of pipe diameter in ten feet, and not to exceed one-half inch in ten feet, provided that such variation does not result in a level or reverse sloping invert; provided also that variation in the invert elevation between adjoining ends of pipe, due to non-concentricity of joining surface and pipe interior surfaces, does not exceed one-sixty-fourth (1/64) inch per inch of pipe diameter, or one-half (1/2) inch maximum.

Section 4B.08 PIPE BEDDING:

All pipes and drains shall be protected from lateral displacement and possible damage resulting from impact or unbalanced loading during backfilling operations by being adequately bedded.

A groove shall be excavated in the bottom of the trench to receive the bottom quadrant of the pipe. Before preparing the groove, the trench bottom shall be excavated or filled and compacted to an elevation sufficiently above the grade of the pipe so that, when completed, the pipe will be true to line and grade. Joint holes shall be excavated so that only the barrel of the pipe receives bearing from the trench bottom.

Pipe bedding materials placed at any point below the mid-point of the pipe shall be deposited and compacted in layers not to exceed ten-inches (10") in uncompacted depth. Deposition and compaction of bedding materials shall be done simultaneously and uniformly on both sides of the pipe. Compaction shall be accomplished with hand or mechanical compactors. All bedding materials shall be placed in the trench with hand tools or other approved

method in such a manner that they will be scattered alongside the pipe and not dropped into the trench in compact masses. Bedding materials shall be 1" drain rock.

In the event trench materials are not satisfactory for pipe bedding, modified bedding will be required. Modified bedding shall consist of placing compacted granular material on each side of and to the level of twelve-inches (12") above the top of the pipe.

Modified bedding material shall be graded as follows: One-hundred percent (100%) passing a No. 4 sieve and less than five percent (5%) passing a No. 200 sieve.

Section 4B.09 TESTS:

The Developer/Contractor will be required to test in the presence of the Public Works representative~~Director/Engineer or his representative~~. Lines will be required to be videoed and a copy given to the Public Works ~~Director/Engineer~~representative. If this test proves to be inconclusive, other required tests shall be conducted in the presence of the Public Works ~~Director/Engineer or his~~ representative. The test shall be performed as follows:

Sub-section A. <u>Displacement Test:</u>

In conducting the displacement test a light will be flashed between manholes or, if the manholes have not as yet been constructed, between the locations of the manholes, by means of a flashlight or by reflecting sunlight with a mirror. If the illuminated interior of the pipe shows broken, misaligned, or displaced pipe or other defects, the defects designated by the Public Works representative~~Director/Engineer~~ shall be remedied at the Developer/Contractor's expense.

Sub-section B. <u>Infiltration Test:</u>

The Developer/Contractor shall furnish labor, equipment, and materials, including pumps, and shall perform the infiltration tests of the completed line in the presence of the Public Works Director/Engineer before it can be placed into service. The Developer/Contractor shall furnish and install the measuring weirs or other measuring devices. The length of line to be tested at any time shall be subject to the approval of the Public Works Representative/Engineer. The maximum allowable infiltration shall not exceed two-hundred (200) gallons per inch diameter per mile per twenty-four hours (24 hrs.) for all installed subsurface drain pipe. If the quantity of infiltration is in excess of the maximum allowable, the leaking joints shall be repaired to the satisfaction of the Public Works Director/Engineer at the expense of the Developer/Contractor.

Sub-section C. <u>Exfiltration Test:</u>

The Developer/Contractor shall furnish labor, equipment, and materials, including pumps, and shall perform the exfiltration tests of the completed line in the presence of the Public Works representative~~Director/Engineer~~ before it can be placed into service. The length of line to be tested at one time shall be limited to the length between adjacent manholes. The maximum allowable exfiltration shall not exceed two-hundred (200) gallons per inch diameter per mile per 24 hours for all installed sewer pipe. The end of the sewer line which projects into the manhole shall be plugged. The pipe shall then be filled with water from the upper manhole, and the line maintained under a light pressure of four feet (4') of head. The inflow of water necessary to maintain this head shall be recorded as the leakage of the system. If the quantity of exfiltration is in excess of the maximum allowable, the leaking joints shall be repaired to the satisfaction of the Public Works Director/Engineer at the expense of the Developer/Contractor.

Sub-section D. <u>Air Testing:</u>

The Developer/Contractor or his representative (a qualified firm or individual agreed upon by the Public Works representative~~Director/Engineer~~ and the Developer/Contractor) shall furnish labor, equipment, and materials, including pumps and compressors, and shall perform, in the presence of the Public Works

representative~~Representative/Engineer~~, air tests of the completed pipe before it can be placed in service. Each section of sanitary sewer pipeline between manholes shall be tested after all the service laterals (and plugs) have been installed. Each test section shall be pressurized to a uniform gauge pressure of five (5) pounds per square inch (34.5kPa) or sufficient to balance a column of mercury ten (10 inches (254 mm) in height. The pressure shall be held without introducing additional air for a period of at least fifteen minutes. Failure of the Developer/Contractor's testing equipment to properly function shall render the test unacceptable. All faulty sections of pipeline shall be repaired and re-tested until the minimum air testing requirements have been met.

Sub-section E. TV Inspection:

The Developer/Contractor shall furnish labor, equipment, and materials, including pumps, etc. and shall assist Public Works Director/Engineer in making a TV inspection of mains. The line shall be filled with sufficient water to fill any low spots or "bellies" to establish low flow line. A color, sewer type "TV" camera will then be used to inspect and record the condition of the entire installation. A video recording and written log of this inspection shall then be given to the Public Works Director/Engineer at the conclusion of the inspection. This video recording shall be a continuous run and free from pauses and/or editing. It shall contain a reference to the line being inspected, it shall also include the date of inspection and a running footage of the line. The written log shall contain the following information; name, address, phone numbers of contractor performing the inspection, the name of the person performing inspection, the date and time of inspection, the line being inspected, footages and a description of any laterals, "bellies", low spots, debris, defects, damage, roots, imperfections, or other findings. This inspection shall be done with the Public Works representative~~Director/Engineer~~ present. No inspection, or record thereof, will be accepted without the Public Works Director/Engineer present during inspection. The contractor/sub-contractor performing the inspection shall be subject to acceptance by the Public Works Representative/Engineer. Any problems that are found shall be repaired/corrected and re-inspected at the expense of the Contractor/Developer, to the satisfaction of the Public Works Representative/Engineer, before line can be placed in service.

Section 4B.10 MANHOLE CONNECTIONS:

Corrugated polyethylene pipe connections to manholes shall be achieved by use of manhole coupling adapters, rubber boots with 300 series nonmagnetic corrosion-resistant steel bands, or grouted directly to concrete.

Section 4B.11 LATERAL CONNECTIONS:

All lateral connections into new mains shall be through preformed tee fittings installed in the main line or with field installed service saddles. All connections by field installed service saddles on new or existing sewer mains shall be done in accordance with manufacturer recommendations and with all required fittings and materials. Connections shall be at the locations shown in the Drawings.

Section 4B.12 "GO/NO-GO" MANDREL PROOF TESTING:

Not less than thirty (30) days after installation of the flexible sewer or drain pipe, the City may require that the Developer/Contractor shall test the buried pipe to insure that ring-deflection of the pipe does not exceed five percent (5%) of the pipe's specified minimum inside diameter (ID). This proof test shall establish that the Developer/ Contractor has installed the flexible pipe in full compliance with the Project Specifications thereby providing required pipe/soil structural strength.

The Developer/Contractor, with Inspector present, shall pull a "Go/No-Go" Mandrel, inspected and approved by the Public Works Representative/Engineer, through the full length of installed flexible pipe. The Mandrel shall be fabricated from suitable metal with a minimum of nine (9) properly sized radial fins mounted upon a center pulling shaft. In any case, the Mandrel shall be provided with an odd number of rigidly mounted radial fins. The Mandrel shall be provided with a proof-sizing ring that can demonstrate that the Mandrel's minimum outside diameter (OD) is not less than ninety-~~five~~ six percent (96~~5~~%) of the specified minimum inside diameter of the installed flexible pipe. The Mandrel shall be pulled by the Developer/Contractor through one hundred percent (100%) of the installed

flexible pipe without using mechanical equipment. Failure of the Mandrel to pass through a pipeline shall be deemed evidence of inadequate installation by the Developer/Contractor not in compliance with the Project Specifications.

The Public Works Director/Engineer may require, if deemed appropriate or necessary, additional proof testing of designated lengths of the buried flexible pipe approximately one year (1 yr.) after installation but prior to the expiration of the Developer/Contractor's Maintenance Bond. The flexible pipeline shall be cleaned adequately prior to performing the "Go/No-Go" Mandrel ring deflection proof test. The Developer/Contractor, with Inspector present, shall pull a Mandrel, approved by the Public Works Representative/Engineer, through the designated length of pipeline without using mechanical equipment. Failure of the Mandrel to pass through the pipeline shall be deemed evidence of inadequate installation by the Developer/Contractor not in compliance with the Project Specifications.

DIVISION 5: MANHOLES

Section 5.01 GENERAL:

This division covers the requirements for manhole materials and installation. Manholes shall be installed at the locations and at the depth shown on the drawings. Manholes shall be furnished complete with cast-iron rings and covers. Distance not to exceed 400' maximum between manholes.

Section 5.02 CONCRETE BASE:

Unless otherwise noted manhole bases shall be precast and shall have pipe inverts and a resilient connection between pipe and manhole for each pipe connecting to the manhole.

Where sewer lines pass through or enter manholes, the invert channels shall be smooth and semi-circular in cross section, conforming to the details shown on the Drawings. Changes of direction of flow within the manholes shall be made with a smooth curve with as long a radius as possible. The floor of the manhole outside the flow channels shall be smooth and slope toward the channel at not less than one-half inch (1/2") per foot.

Concrete pipe connections to manholes shall be achieved by use of manhole coupling adapters, rubber gaskets, positive seal gasket system, or grouting a bell or spigot pipe at the appropriate locations. Rubber gaskets or boots shall be made of rubber compound meeting ASTM C-923 Specifications for resilient connections between pipe and manhole. They shall meet all other applicable ASTM specifications, including ASTM F-477.

Positive seal gasket systems boot shall have a wall thickness of three-eighths inch (3/8"). The boot shall either be "cast-in-place" in the precast base or attached to the precast base by means of an internal expanding band. When the boot is attached to the precast base, a watertight seal between the boot and the precast base must be accomplished. An external band (take-up clamp) shall be supplied and used to clamp and seal the boot to the pipe. The band shall be made of 300 series nonmagnetic corrosion-resistant steel. After the band has been placed, it shall be completely coated with a bituminous material approved by the Public Works Representative/Engineer.

PVC pipe connections to manholes shall be achieved by use of manhole coupling adapters, rubber gaskets, or positive seal gasket system. PVC may not be grouted directly to concrete.

The maximum size pipe that can be used in a 48-inch manhole is twenty-four (24") inch PVC or twenty-one (21") inch concrete. For pipes larger than these require a 60-inch manhole or concrete box.

Concrete for manhole bases shall comply with the requirements of Division 8, Concrete, of these Specifications.

When cast-in-place manholes are authorized, they must be watertight and conform in dimension and design to the standard drawings. Cast-in-place manholes will only be considered on concrete subsurface lines or when connecting to an existing active line. A gasket placed over the outside of the pipe or other means of providing a watertight seal is required.

Section 5.03 WALL AND CONE SECTIONS:

All manholes shall be precast, sectional, reinforced concrete pipe of forty-eight-inch (48") or sixty-inch (60") diameter as specified. Both cylindrical and taper sections shall conform to all requirements of ASTM Designation C-478-88 (or latest revision) for Precast Reinforced Concrete Manhole Sections with the following exceptions:

1. The throat section of the manhole shall be adjustable, by use of manhole sections, up to forty-eight inches (48") in height.

2. The taper section shall be a maximum of thirty-six inches (36") in height for 48-inch manholes and thirty-nine inches (39") for 60-inch manholes, shall be of eccentric conical design, and shall taper uniformly to thirty inches (30") inside diameter.

3. The pipe used in the base section shall be furnished in section lengths of one, two, three, and four-feet (1, 2, 3, and 4 feet) as required.

All joint surfaces of precast sections and the face of the manhole base shall be thoroughly cleaned and wet prior to setting precast sections. All joints, including grade rings, shall be set in mortar or butyl rubber gasket. The mortar shall consist of one (1) part cement and one and one-half (1-1/2) parts sand with sufficient water added to bring the mixture to workable consistency or the joints shall be sealed with a butyl rubber gasket that is permanently flexible and non-shrinking. All joints shall be water tight and free from appreciable irregularities in the interior wall surface.

Sub-section A. Manholes Shall Be Furnished With Steps:

The steps are to be made of co-polymer polypropylene. The co-polymer polypropylene used shall conform to ASTM D-4101-82 PP200B33450Z02. The steel used in manufacturing of this product shall be a deformed 3/4" reinforcing rod. This material shall be grade 60 and conform to the requirements of ASTM A-615. The first step shall be a minimum of 24" from the top of the manhole.

Section 5.04 DROP MANHOLES (By approval of Public Works/Engineer only):

When the difference in elevation of an incoming sewer drain is 12-inches or greater a drop manhole shall be used. The drop manhole shall be constructed as shown in the Standard Drawings. The piping from the wye to the manhole on both legs shall be ductile iron or PVC pipe with appropriate fittings. If the sewer main that the drop manhole is a part of is concrete, then a transition coupling (Fernco) shall be used to connect the main with the drop pipe assembly.

The drop pipe assembly shall be encased in flowable fill. The flowable fill shall be placed to the minimum thickness as shown on the Standard Drawings.

Sub-section A. Cement:

Use Portland Cement, Type II per Division 8, Portland Cement Concrete.

Sub-section B. Fly Ash:

Supply fly ash that complies with ASTM C-618 Class F except that the loss on ignition must be 3 percent or less.

Sub-section C. Fine Aggregate:

Use natural sand. The sand shall meet the following gradation when tested in accordance with AASHTO T-27.

Fine Aggregate

Sieve Size	Percent Passing
No. 3/4	100
No. 100	0-10

Sub-section D. Mix Design:

The mix design shall meet the following requirements:

- Mix design compressive strength (28 day) – between 50 to 150 psi.
- Portland Cement – at least 50 pounds per cubic yard.
- Fly Ash – at least 300 pounds per cubic yard.
- Slump – 6 to 10 inches maximum.

Section 5.05 MANHOLE RINGS AND COVERS:

All iron casting shall conform to the requirements of ASTM Designation A-48 (Class 35) for grey iron castings, free from blowholes and shrinkage defects. Castings shall be free from fins and burrs and shall be shot-blasted to remove sand and other foreign matter.

Rings and covers shall be equal to the twenty-four inch (24") Standard circular, with machined bearing surfaces, gravity, solid, non-rocking type. The minimum weight of the cover shall be one hundred sixty (160) pounds. The minimum weight of the ring shall be two hundred eighty (280 lbs.). Flat rings and covers shall be allowed only when specifically authorized. Vented covers may be specified for certain areas. Use vented covers only when authorized. The tops of the cover and ring shall be flush and there shall be 1/8-inch clearance between the cover and the ring. In addition to the foundry name and year of manufacture, the cover shall be marked "SEWER," "STORM DRAIN," "LAND DRAIN," or "IRRIGATION" as appropriate.

Sub-section A. Setting of Manhole Frames and Covers:

Manhole rings shall be set in place in with the shaft in a bed of cement sand mortar, which mix shall be one part cement to two parts sand or Kent Seal. Covers shall be set to the finished grade and contour of the existing street. Rings and covers shall be protected during backfilling and compaction of the soil and during the placing or replacing of road surfaces. Any rings or covers loosened from the manhole sections shall be reset in cement mortar and any rings or covers damaged or broken shall be replace by the Developer/Contractor at its expense. Manholes placed in asphalt surfacing shall be set in a concrete collar. The collar shall be at least twelve inches (12") thick and extend at least ~~twenty four~~twelve inches (~~24~~12") from the cast iron ring. The concrete collar and cast iron ring shall be constructed such that at the interface with the asphalt, the collar shall be one-half inch (1/2") lower than the pavement. ~~The cast iron ring shall be constructed such that it is one-half inch (1/2") lower than the pavement.~~ Brick shall not be used to raise the manhole. Cones shall not be broken out to lower the ring to meet the road grade. Sections shall be removed and grade rings or adapter rings (riser) used. The maximum amount of grade rings to be used is a combined ten inches (10"). Any debris must be kept from entering sewer line and all debris removed.

Section 5.06 CONNECTIONS TO EXISTING SEWER:

Manholes used to connect the sewer to the existing sewer shall be plumb and centered on the existing pipe at the elevation designated and the base placed as specified. Care shall be taken not to disturb the alignment of the existing sewer.

The cutting of the existing sewer pipe shall be done in the presence of the Public Works Representative/Engineer. The cut shall be full area of the new pipe and shall be finished so as to leave no projections that will restrict the flow or catch solids.

Every precaution shall be taken to prevent any material from entering the sewer main. Any such materials entering the sewer shall be removed.

Section 5.07 INCOMING SEWER LINES:

In no case shall an incoming sanitary sewer be allowed to drop more that 12-inches to the base. In all cases the base shall have a channel for the incoming sewage. ~~All manholes must be air tested.~~ All debris must be removed including any that may have entered the sewer line itself.

Section 5.08 REVISIONS TO EXISTING MANHOLES:

All work required to revise or modify existing manholes, in connection with this project, as shown of the plans, or as directed by the Engineer, necessary to complete the project shall be done by the Contractor and no extra compensation shall be allowed for this work. This work shall include such incidentals as raising manhole floors, providing drop type inverts, new invert openings, etc.

DIVISION 6: VALVES, COUPLINGS, AND FIRE HYDRANTS

Section 6.01 GENERAL:

This section covers distribution valves to be used in the water system, couplings, and fire hydrants.

The Contractor shall furnish all valves indicated on the plans as called for in these specifications or as called for proper operation of the water system. Valve manufacturer shall provide detailed information as required by the Engineer for evaluating the quality of the valve. The technical information shall include complete dimensions, weights and material lists. No valve will be approved for installation until the required information has been received and approved. Except as otherwise specified, all buried valves shall be painted with two coats of asphalt varnish in accordance with the requirements of AWWA C 500. Gate valves shall be iron body, resilient seat, nonrising stem conforming to AWWA C 509 with double O-ring. Valves shall open counter clockwise. Valve ends shall be flanged or ~~mechanical~~ restrained joint as required for the type of pipe used. Maximum shutoff pressure shall be 200 psi.

Gate valves, hydrants and fittings shall be located as shown on the plans or as directed by the Engineer or Public Works Department Director.

Section 6.02 RESILIENT SEATED GATE VALVE:

Valves in sizes ~~4~~6" through 10" shall be of the iron body, non-rising bronze stem, resilient seated type, manufactured to equal or exceed all applicable AWWA standards of C-509 latest revision and all specific requirements outlined in these specifications. The minimum acceptable valve size is 6" for both culinary and secondary mains and services. If a smaller main or service is required, a 6" valve shall be installed and a reducer shall be used to achieve the desired main size.

Valves shall be iron body, bronze mounted, double disc with non-rising stems with design construction to AWWA C-500, and modifications herein. Stem seals shall be double O-ring seals valves shall open counterclockwise. Provide 2" square wrench nut for key operation. Operating valve nut shall ~~be~~ have valve stem risers installed to within 6-inches of finished surface grade. Install 24 inches of crushed rock from the bell top of the valve to the trench grade below the valve to provide proper drainage. Provide flanged or ~~mechanical~~ restrained joint ends. ~~, except gate valves for use with fire hydrants.~~

1. Valves shall open left and be provided with 2" square operating wrench nuts unless otherwise specified.

2. When valves have ~~Mechanical~~ Restrained Joints, they shall be furnished with all necessary glands, followers, and bolts and nuts to complete installation.

3. The disc shall have integrally cast ASTM B-62 bronze stem nut to prevent twisting, binding or angling of the stem. Designs with loose stem nuts are not acceptable.

4. Bronze valve stems shall be interchangeable with stems of the double disc valves of the same size, direction of opening and manufacture.

5. All internal ferrous surfaces shall be coated, holiday free, to a minimum thickness of 4 mills with a two part thermo setting epoxy coating. Said coating shall be non-toxic, impart no taste to the water, formulated from materials deemed acceptable in the Food and Drug Administration Document Title 21 of the Federal Regulations on food additives, Section 121.2514 entitled Resins and Polymeric Coatings. It shall protect all seating and adjacent surfaces from corrosion and prevent build-up of scale or tuberculation.

6. The sealing element shall be secured to the disc with self-locking stainless steel screws, and it shall be field replaceable, and shall be such that it cannot be installed improperly.

7. Stem failure from over torquing in either the open or closing position shall occur externally at such a point as to enable the stem to be safely turned by use of a readily available tool after exposure of the valve through excavation.

8. Valve design shall incorporate a positive metal to metal stop to prevent over-compression of the sealing element.

9. A full faced composition gasket placed between machined body and bonnet flanges is required to eliminate cold flow or creep action present with "O" ring gasketed bodies.

10. Valves shall have a test plug in the bonnet area to vent air and allow line pressure testing.

11. The exterior of the valves shall be Asphalt Varnish, JAN-P-450. If exterior epoxy is used, all bolts and nuts shall be made of Stainless Steel to prevent galvanic corrosion of said nuts and bolts due to insulation from the ferrous valve and line.

12. All culinary valves shall have valve stem risers installed to within six inches of finish grade.

Section 6.03 BUTTERFLY VALVE:

All valves 12 inches and larger shall be butterfly valves and shall conform to the latest revision of AWWA Standard C-504, Class 150-B, and comply with the following:

1. Valve bodies shall be cast iron, ASTM A-126 Class B. Body ends shall be flanged with facing and drilling in accordance with ANSI B16.1, Class 125; or ~~mechanical~~ restrained joints in accordance with AWWA C-111. All mechanical joint end valves shall be furnished complete with joint accessories (bolts, nuts, gaskets, and glands). All valves shall conform to AWWA Standard C-504, Table 3, Laying Lengths for Flanged Valves and Minimum Body Shell Thickness for all Body Types.

2. Valve disc shall be ductile iron ASTM A-536, grade 65-45-12. Valve disc shall be of the offset design providing 360 degree uninterrupted seating.

3. The resilient seat shall be natural rubber bonded to an 18-8, Type 304 stainless steel retaining ring secured to the disc by 18-8, Type 304 stainless steel screws. The seat shall be capable of mechanical adjustment in the field and field replaceable without the need for special tools. Valve body seat shall be 18-8, Type 304 Stainless Steel.

4. Valve shafts shall be 18-8, Type 304 stainless steel. Shafts shall be of the two piece stub design and attached to the disc by means of "O" ring sealed taper pins with lock nuts.

5. The valve assembly shall be furnished with a non-adjustable factory set thrust bearing designed to center the valve disc at all times.

6. Shaft bearings shall be contained in the integral hubs of the valve body and shall be self-lubricated sleeve type.

7. Valve shaft seal shall consist of "O" Rings. Where the valve shaft projects through the valve body for actuator connection, the "O" Ring packing seal shall be field replaceable as a part of a removable bronze cartridge.

8. When manual actuators are required they shall be of the traveling nut design capable of withstanding 450 foot pounds of input torque against the open and closed stops. All actuators shall have adjustable mechanical stop limits. The closed position stop shall be externally adjustable. Valves shall be installed with the shaft horizontal unless otherwise directed by the Public Works Director/Engineer and shall be provided with a 2-inch square operating nut for manually operating the valve with a "T" handle wrench.

9. The exterior of the valves shall be Asphalt Varnish, JAN-P-450. Epoxy ~~All valves shall be~~ coated ~~with epoxy in conformance~~ valves shall conform to AWWA Standard C-550, latest revision. Interior wetted ferrous surfaces shall be coated nominal 10 mils thick for long life; and body exterior shall have a minimum of 3 to 4 mils coating thickness in order to provide superior base for field-applied finish coats.

10. All culinary valves shall have valve stem risers installed to within six inches of finish grade.

Section 6.04 VALVE BOXES:

All buried valves shall be installed complete with two-piece, cast iron, 5-1/4-inch shaft valve box with locking lid. The lid shall have the words "Water" cast in the metal depending on the application.

Valves and valve boxes shall be installed and firmly supported where shown on the drawings. Valves and valve boxes shall be set plumb. Valve boxes shall be centered directly over the valve. Valves shall be aligned with property lines where possible. Earth fill shall be carefully tamped around the valve box to a distance of four (4) feet on all sides of the box, or to the undisturbed trench face if less than four (4) feet. Valves shall have the interiors cleaned of all foreign matter before installation. All valve boxes located in streets shall be installed to grade. Valves placed in asphalt surfacing shall be set in a concrete collar. The collar shall be at least twelve inches (12") thick and extend at least twelve inches (12") from the valve box. The concrete collar shall be constructed such that at the interface with the asphalt, the collar shall be one quarter inch (1/~~4~~2") below the pavement. All culinary valves shall have a round concrete collar and all secondary valves shall have a square concrete collar.

Valve boxes in off-road areas shall extend six (6) inches above grade.

Culinary Valve Boxes shall be D&L supply M-8044, sliding type with base as required for the valve size used and of sufficient length for the specified pipe bury. It shall have the word "water" stamped thereon. All culinary valves shall have valve stem risers installed to within six inches of finish grade.

Irrigation Valve Boxes shall be ~~buffalo type~~D&L supply M-9009, sliding type with base as required for the valve size used and of sufficient length for the specified pipe bury. It shall have the word ~~"sprinkler" or~~ "irrigation" stamped thereon.

~~Cast iron valve boxes shall be firmly supported, and maintained centered and plumb over the wrench nut of the gate valve, with box cover flush with the surface of the finished pavement or at such other levels as may be directed. The valve shall be adequately supported and surrounded with two (2) feet in depth of fractured gravel around the base of the valve extending up to the bonnet. Valve boxes shall be flush with grade. Valve boxes located in road ways shall be encased in concrete at grade with a minimum of 12 inches deep and 12 inches beyond the outer edge. Valve boxes identifying culinary water locations shall be round in shape at grade.~~

Section 6.05 COUPLINGS:

Couplings shall be equal to the product of Smith-Blair or Dresser with ductile iron couplings being used on all ductile iron and PVC pipe. Couplings shall be of the straight, transition, or reducing style as required by the specific installation. Where the coupling is used to join a ductile iron line to a steel line appropriate transition gaskets will be used. All steel fittings and bolts shall be coated with a non-oxide coating and wrapped with polyethylene.

Latest standard style with rubber gasket for water. For diameters 4 inches to 14 inches middle ring to be a minimum of 1/4 inch thick and 5 inches long with 4 5/8 inch bolts for 4 inch diameters; 6 5/8 inch bolts for 6 and 8 inch diameters and 8 5/8 inch bolts for 10, 12, and 14 inch diameters.

Section 6.06 FIRE HYDRANTS:

Fire hydrants shall be "traffic model" type designed to conform to AWWA Specification C-502 and shall be of compression type. ~~Hydrants shall be Mueller or Clow for consistency and maintenance purposes.~~

Hydrant valves shall be a minimum of 6-inch size. Hydrants shall be supplied complete with two 2 1/2-inch hose nozzles and one 4 1/2-inch pumper nozzle. All nozzles shall be provided with National Standard threading. A one cubic yard gravel sump shall be provided at each hydrant. Each hydrant shall also be supplied with O-ring seals, a National Standard pentagon operating nut which is designed for clockwise rotation closing, and a 6-inch ~~mechanical~~ restrained joint inlet.

Hydrants shall be located in a manner to provide complete accessibility, and in such a manner that the possibility of damage from vehicles or injury to pedestrians will be minimized. Maximum separation distance between fire hydrants shall not be greater than 500 feet, unless otherwise specified by the fire marshall or public works. ~~Unless otherwise directed, the setting of any hydrant shall conform to Items 4, 5, 6, 7, and 8.~~

Fire hydrants shall meet the requirements of the current AWWA-Standard Specification C 502 for fire hydrants for ordinary water works service with the following supplementary qualifications:

(1) Length for depth of trench to be as specified.
(2) Two hose nozzles 2 1/2 inch diameter with national standard fire hose thread.
(3) One steamer nozzle 4 1/2 inch diameter when ordered with national standard fire hose thread.
(4) Counter clockwise to open.
(5) Operating nut pentagon, 1 1/2 inch point to flat.
(6) All internal parts to be removable from top of hydrant without the use of special tools.
(7) Operating valve nut shall be within 6-inches of finished surface grade.
(8) Meuller, Waterous and Clow hydrants shall be used for consistency and maintenance purposes.
(9) All fire hydrants shall have a Copperhead Industries, LLC Snake Pit 14" Magnetized Tracer Box with blue cast iron top (CHLD14B) installed a minimum of 12" from the front of each fire hydrant. The top of the tracer box shall match the top back of curb elevation. Tracer wire shall be run from the main with the fire hydrant lead and connected to the Test Station.

(Copperhead Industries, LLC Snake Pit 14" Magnetized Tracer Box with purple cast iron top (CHLD14P) shall be installed at the nearest secondary service to each fire hydrant. The top of the tracer box shall match the top back of curb elevation. Tracer wire shall be run from the main with the service and connected to the Test Station.)

All hydrants shall stand plumb, and shall have their nozzles parallel with or at right angles to the curb, with the pumper nozzle pointing normal to the curb, except that hydrants having hose nozzles at an angle of 45 degrees shall be set normal to the curb. They shall conform to the established grade, with nozzles at least 12 inches above the ground.

A drainage pit 2 feet in diameter and 2 feet deep shall be excavated below each hydrant and filled compactly with coarse gravel or broken stone, mixed with coarse sand, under and around the bowl of the hydrant and to a level of 6 inches above the waste opening. No hydrant drainage pit shall be connected to a sewer.

The bowl of each hydrant shall be well braced against unexcavated earth at the end of the trench with concrete backing, or it shall be tied to the pipe with suitable rods or clamps.

Hydrants shall be thoroughly cleaned of dirt, or foreign matter before setting.

Standard plugs shall be inserted into the bells of all dead ends of pipe, toes or crosses and spigot ends shall be capped.

Reaction or thrust blocking shall be applied on all pipe lines 4 inches in diameter or larger at all tees, plugs, caps and at bends deflecting 11-1/4 ~~22-1/2~~ degrees or more, or movement shall be prevented by attaching suitable metal rods or straps as directed by the Engineer. Thrust block size shall be determined by the Developer/ Contractor's engineer and shall be shown on the plans.

Reaction or thrust blocking shall be of concrete having compressive strength of not less than 4~~3~~,000 psi. Blocking shall be placed between solid ground and the fitting to be anchored, the area of bearing on pipe and on ground in each instance shall be that required by the Engineer. The blocking shall be so placed that the pipe and fitting joints will be accessible for repair. The pipe shall be protected from the thrust block by a layer of 12~~0~~ mil plastic.

All ~~mechanical~~ metallic joints, hydrants and caps shall be wrapped with a layer of 12~~0~~ mil plastic and all bolts greased.

Section 6.07 BLOW OFF VALVE:

A blow off valve is required on the culinary system in cul-de-sac's and in temporary dead-end streets. The installation in cul-de-sacs shall be permanent and shall come off the end of the culinary water line. Fire Hydrants may be used in place of Blow off Valve when approved by Public Works Director/Engineer. A blow off valve shall also be required on the pressurized irrigation system at dead end or low elevation point connection lines in accordance with requirements and specifications of the City.

Section 6.08 AIR INLET AND REMOVAL FACILITY:

The connection to the main for the air inlet and removal facility shall be by a line size by 2-inch screw on Vent-o-Mat Model Number 050 RBX 2521 (363 psi) ~~(or 1 inch)~~ tapped ~~tee~~ brass saddle for line sizes 4-inch through 12-inch and by a ~~bronze service clamp~~4" flanged Vent-o-Mat Model Number 100 RBX 2531 (363 psi) on a ductile iron tee~~, Mueller Model H-13490~~ for line sizes 14-inches and larger. Air inlet and removal facilities shall be placed at high points or uphill end points in the system. Tapping the main through the service clamp will be accomplished with standard tapping equipment before the system is put into service.

Connection to the tapped tee or service clamp shall be by a 1-inch or 2-inch brass MIP x Compression adapter. Piping and bends shall be 1-inch or 2-inch HDPE. This piping shall extend from the main to the utility box. The utility box shall house a 1-inch or 2-inch brass ball valve with screwed ends, 1-inch or 2-inch brass nipples, 1-inch or 2-inch brass 90° elbow, 1-inch or 2-inch by 2 1/2-inch brass reducer, 2 1/2-inch brass nipple and 2 1/2-inch fire hose connection. All threads except the fire hose connection shall be standard pipe threads. The fire hose connection shall have standard fire hose connection threads for a 2 1/2-inch fire hose. A fire hose cap with chain secured to the stand pipe shall be installed at the end of the vertical stand pipe. For secondary water units installed near curb and gutter a 11 3/4-inch by 17-inch standard green fiberglass irrigation box with cover shall be installed over the 1-inch or 2-inch gate valve and 1-inch or 2-inch stand pipe. A sign shall be attached to or embossed on the cover indicating as follows: "AIR RELEASE". Box shall be Brooks 1419 series utility box and lid with recessed standard waterworks pentagon head locking device. For Units installed where there is no curb and gutter, the irrigation box shall be a 30-inch by 2-foot (30" X 2') concrete pipe section with a 24-inch CI manhole ring and grate equal to D&L Supply C-2670. For Culinary water units, the standpipe shall be located above ground and protected in a perforated steel pipe. For 1-inch or 2-inch standpipe, the steel pipe shall be minimum 5-inch diameter, otherwise a 6-inch steel pipe shall be used.

The Developer/Contractor shall provide smooth bore, circular woven suction hose reinforced with spring steel wire. The rubber friction cover shall be durable and resistant to wear and abrasion. The fire hose shall be two and one-half inch (2 1/2") National Fire hose 55-HD-77 or equivalent. Each hose shall be fitted with a two and one-half inch (2 1/2") male end adapter and a two and one-half inch (2 1/2") female end adapter firmly attached to withstand working pressures of 200 PSI. Each hose furnished for a unit with a fiberglass box shall also be provided with an Akron swivel elbow #632 or equivalent for connection of the fire hose to the air inlet and removal valve.

Section 6.09 PRESSURE IRRIGATION DRAINS:

When system drains are necessary to be installed on extensions of the pressure irrigation system they shall be a minimum of 6" and constructed as a system drain to a curb inlet box or system drain to a storm drain pipe**.** The drain shall be constructed as shown on the Standard Drawings. The materials used shall meet the requirements of Division 3, Pressure Pipe Pressure Irrigation. The connection to the box or pipe shall be by coring a hole and grouting the drainpipe in. A non-shrink grout shall be used.

~~When a section of pressure irrigation pipeline has to be laid such that there is a belly in it then a local drain sump will need to be constructed. The drain shall be constructed as shown on the Standard Drawings. The materials used shall meet the requirements of Division 3, Pressure Pipe Pressure Irrigation, Division 4, Concrete Pipe, and Division 5, Manholes.~~

Section 6.10 CULINARY WATER CHECK VALVES:

Standard iron body swing check valves for 150 pound working pressure Crane, Ludlow or equal.

DIVISION 7: EARTHWORK

Section 7.01 GENERAL:

This section defines the requirements for excavation and backfill for streets and structures; construction requirements of earth embankments and earth fills; subgrade preparation; compaction and testing; removal of structures and fill; and erosion control.

Section 7.02 EXCAVATION FOR STRUCTURES:

Where suitable subgrade soils exist, structures shall be founded on undisturbed original subsoil. All unauthorized excavation below the specified subgrade shall be replaced with concrete, monolithic with that of the slab above or with coarse gravel thoroughly compacted into place.

Subgrade soils for structures not suitable for proper support shall be replaced with firm, dense, thoroughly compacted and consolidated material free from mud and muck. Coarse gravel or crushed stone may be used for subsoil reinforcement if satisfactory results can be obtained thereby. Such material shall be applied in thin layers, each layer being embedded in the subsoil by thorough tamping. All excess soil shall be removed to compensate for the displacement of the gravel or crushed stone and the finished elevation of any subsoil reinforced in this manner shall not be above the specified subgrade elevation.

Section 7.03 EXCAVATION FOR STREETS:

Excavation for street pavement and/or curb and gutter shall consist of the removal of all materials within the lines, grades and slopes shown on the plans or established by the City Engineer, including all earth, stone, loose rock, sand clay, shale, hard-pan, boulders, solid rock, stone blocks, roots, brush, trees, rubbish and all other materials of whatever nature that may be encountered within the lines, grades and slopes above described or that may be required in grading approaches to intersecting streets and alleys or in providing ditches at the ends of pipes, waterways and flumes.

Section 7.04 EXCAVATION BELOW SUB-GRADE:

If soft or otherwise undesirable material is found to exist at and below the sub-grade elevation, then such material shall be removed to the extent and in the manner designated by the Engineer.

Section 7.05 GRANULAR FOUNDATION BORROW:

Granular foundation borrow shall be compacted to not less than 96% of maximum dry density as determined by ASTM D-1557.

Section 7.06 BACKFILL AROUND STRUCTURES:

No backfilling around or behind structures shall be initiated until the concrete is fully cured for **seven days**. Backfill around structures shall be placed to the lines shown on the drawings, or as directed. After completion of foundation footings and walls and other construction below the elevation of the final grades, and prior to backfilling, all forms shall be removed and the excavation shall be cleaned of all trash and debris. Hand compacted fill, including fill compacted by manually-directed power tampers, shall be placed in layers whose thickness before compaction is not greater than four (4) inches. Material for backfilling shall consist of suitable excavated material or imported sand, gravel, or other suitable material with no rocks whose greatest dimension is larger than two (2) inches.

Fill shall be placed in a manner that will prevent damage to the structures and will allow the structures to assume the loads from the fill gradually and uniformly. The height of the fill adjacent to a structure shall be increased at approximately the same rate on all sides of the structure. Each layer shall be compacted by hand or machine tampers or by other suitable equipment to a density equal to 96~~5~~% of maximum dry density as measured by ASTM D1557.

Section 7.07 CONSTRUCTION OF EMBANKMENTS AND FILLS:

A. Clear and Grub: On all portions of the work, where filling is required, the entire area shall first be stripped of all undesirable materials, as designated by the Inspector. The resulting surface, after the removal of all undesirable material, shall be scarified to the extent designated by the Inspector and brought to a uniform surface by means of graders or other suitable equipment, and shall be completed as provided in these specifications, before any embankment material is placed.

B. Foundation Preparation: Foundations for earth fill shall have unsuitable materials removed. Weeds, sod, roots (larger than 1/4-inch in diameter), vegetation, or other organic material shall be removed by clearing, stripping, and/or grubbing. Except as otherwise specified, earth foundation surfaces shall be graded to remove surface irregularities and shall be scarified parallel to the axis of the fill or otherwise acceptably scored and loosened to a minimum depth of six inches. The moisture content of the loosened material shall be controlled as specified for the earth fill, and the surface materials of the foundation shall be compacted and bonded with the first layer of earth fill as specified for subsequent layers of earth fill.

Earth abutment surfaces shall be free of loose, uncompacted earth in excess of 2 inches in depth normal to the slope and shall be at such a moisture content that the earth fill can be compacted against them to effect a good bond between the fill and the abutments.

Rock foundation and abutment surfaces shall be cleared of all loose material by hand or other effective means and shall be free of standing water when fill is placed upon them. Occasional rock outcrops in earth foundations for earth fill, except in dams and other structures designed to restrain the movement of water, shall not require special treatment if they do not interfere with compaction of the foundation and initial layers of the fill or the bond between the foundation and the fill.

C. Placement: Fill shall not be placed until the required excavation and foundation preparation have been completed and the foundation has been inspected and approved by the Public Works Director/Engineer and any Regulatory Agency having authority over the project. Fill shall not be placed upon a frozen surface, nor shall snow, ice, or frozen material be incorporated in the fill.

All excavated materials that have been approved by the Inspector for backfill purposes and that are needed for that purpose, shall be used at the points designated by the Inspector and in the following manner:

(1) The embankment shall be built by depositing approved material, in approximately level uniform layers, not exceeding six inches in thickness after compacting. Materials placed by dumping in piles or windrows shall be spread uniformly to not more than the specified thickness before being compacted.

(2) The material in place at both ends of any backfill, or where net material is placed against material in place, shall be plowed into the new material as the work progresses and shall be thoroughly scarified and worked into the new material and brought to the proper elevation before rolling of the layer being placed is commenced.

(3) If the material as found in excavation is too wet, as determined by the Inspector, then it shall be permitted to dry out to the extent required before being used in the embankment; or the material may be placed to the proper thickness on the embankment and worked with satisfactory equipment until the quantity of moisture in the material has been reduced to that required for maximum compaction. If the material as found in excavation is too dry, as determined by the Inspector, then it shall be moistened to the extent required and worked with harrows or other suitable equipment until the moisture throughout the material is uniform and contains the proper percentage of moisture, as determined by the Inspector, for proper compaction.

(4) All backfill materials shall be built to the lines, grades, and slopes shown on the plans or approved by the city engineer.

(5) backfill materials shall be compacted to 96~~5~~% of maximum density (AASHO T-99 Test Procedure) unless otherwise specified by the City.

(6) Hand compacted fill, including fill compacted by manually-directed power tampers shall be placed in layers whose thickness before compaction is not greater than four (4) inches. All rock whose greatest dimension is larger than two-inch (2") shall be removed from the material receiving compaction by manually directed power tampers.

Earth fill designed to restrain the movement of water shall be placed so as to meet the following additional requirements:

1. The distribution of materials throughout each zone shall be essentially uniform, and the fill shall be free from lenses, pockets, streaks, or layers of material differing substantially in texture or gradation from the surrounding material.

2. If the surface of any layer becomes too hard and smooth for proper bond with the succeeding layer, it shall be scarified parallel to the axis of the fill, to a depth of not less than 2 inches before the next layer is placed.

3. The top surfaces of embankments shall be maintained approximately level during construction, except that a crown or cross-slope of not less than 2 percent shall be maintained to ensure effective drainage, and except as otherwise specified for drain fill zones. If the Drawings or specifications require or the Public Works Director/Engineer directs that fill be placed at a higher level in one part of the embankment than another is, the top surface of each part shall be maintained as specified above.

4. Dam embankments shall be constructed in continuous layers from abutment to abutment except where openings to facilitate construction of inlet and outlet pipes are specifically authorized in the contract.

5. Embankments built at different levels as described in 3 and 4 shall be constructed so that the slope of the bonding surfaces between the embankment in place and embankment to be placed is not steeper than 2 feet horizontal to 1-foot vertical. The bonding surface of the embankment in place shall be stripped of all loose material, scarified, moistened and recompacted when the new fill is placed against it. This is needed to ensure a good bond with the new fill, to obtain the specified moisture content and specified density at the junction of the in-place and new fill.

D. **Borrow**: When the embankment or fill exceeds the amount of excavation, sufficient additional material shall be obtained from borrow pits provided by the Developer/Contractor. All material proposed to be imported shall be subject to the review and approval of the Public Works Director/Engineer prior to starting of hauling operations.

The materials used for embankment and fill construction shall be free from sod, grass, roots larger than 1/4-inch diameter, trash, clods, rocks larger than four (4") inches in diameter, and all other material unsuitable for construction of compacted fills. If approved by the city, rotomilled asphalt meeting the large rock requirement may be used as borrow.

E. **Final Grading:** Grading of completed embankments and fills shall bring the surfaces to a smooth, uniform condition with final grades being within 0.1 foot of the design grade.

Section 7.08 CONSTRUCTION OF SUB-GRADE:

A. Preparation of Sub-Grade: In excavating the required material, the work shall be so handled as to leave in place sufficient material above the finished sub-grade elevation, to provide for compaction in building the sub-grade to the prescribed elevation.

B. Scarify and Compaction: After the materials have been excavated, as above described, then the sub-grade shall be scarified, after which the material shall be accurately graded to the required form of the finished

sub-grade and rolled with approved rollers to compaction required. If additional moisture is required, in order to produce the compaction required, then the proper quantity shall be applied uniformly, either before or after scarifying. If necessary, the material shall be scarified after the water is applied, in order to obtain uniform distribution of moisture and bring the material to a suitable condition. All rocks, boulders, or other unsuitable material shall be removed. The quantity of material, and its distribution, before rolling, shall be such that when compacted the required form and elevation will be secured. All sub-grade shall be compacted to 96~~5~~% of maximum density (AASHO T-99 Test Procedure).

C. Completed Sub-Grade: The completed sub-grade shall accurately conform to the lines, grades and slopes shown on the plans or designated by the engineer and shall be maintained in satisfactory condition by the contractor. No driving or wheeling will be permitted on an unprotected sub-grade without the approval of the inspector.

D. Sub-Base: The depth of sub-base material shall be determined by soil exploration and load requirements. Such soil analysis shall be in accordance with acceptable engineering practices.

Section 7.09 COMPACTION OF MATERIALS:

Maximum density, as used in these Specifications, shall be defined as the maximum density obtained in the laboratory by ASTM D 1557. In-place density test procedures shall be in accordance with ASTM D 2922 and ASTM D 3017.

The material shall be deposited in horizontal layers having a thickness of not more than ten-inches (10") prior to being compacted as hereinafter specified. The distribution of materials shall be such that the compacted material will be homogeneous and free from lenses, pockets, or other imperfections.

During placement and compaction of fill, the moisture content of the materials being placed shall be maintained within the specified range, and the moisture content shall be uniform throughout the layers. Disking, blading or other approved methods prior to compaction of the layer shall obtain uniform moisture distribution. The moisture shall be controlled at a level to permit compaction of the fill as specified, but in no case greater or less than two percent plus or minus of the optimum moisture as determined by AASHTO T-99.

The application of water to the fill materials shall be accomplished at the borrow areas insofar as practicable. Water may be applied by sprinkling the materials after placement on the fill, if necessary.

Material that is too wet when deposited on the fill shall either be removed or dried to specified moisture content prior to compaction.

If the top surface of the preceding layer, a foundation or abutment surface in the zone of contact with the fill becomes too dry to permit suitable bond it shall be scarified and moistened by sprinkling to the required moisture content prior to placement of the next layer of fill.

When the material has been conditioned as here in before specified the backfill or embankment shall be compacted to a minimum of 96% of maximum dry density as determined by AASHTO T-99. Densification of earth fill shall be performed by equipment designated solely for that purpose. Each layer of fill shall be compacted as necessary to make the density of the fill matrix not less than the minimum density specified. The fill matrix is defined as the portion of the fill material finer than the maximum particle size used in the compaction test method specified.

Sub-section A. <u>Under Roadways</u>.

Under roadways and extending one foot beyond the proposed curb-line the fill or embankment material shall be compacted to a minimum of 96% of maximum density specified above.

Sub-section B. <u>Under Sidewalks and Driveways</u>.

Under sidewalks and driveways extending one foot each side of the edge of slab the fill or embankment material shall be compacted to a minimum of 96% of maximum density specified above.

Section 7.10 COMPACTION TESTING:

It shall be the responsibility of the Contractor to control his operations by confirmation tests to verify and confirm that he has complied, and is complying at all times, with the requirements of these Specifications concerning compaction, control, and testing.

Each location for trench compaction tests shall include tests for each layer, type, or class of backfill from bedding to finish grade or as required by inspector. The frequency of Contractor's confirmation tests shall be not less than as follows:

Situation	Test Frequency
Trench in open field	2 every 1000 linear feet
Trench along dirt or gravel road	2 every 500 linear feet
Trench crossing paved roads	2 locations along each crossing
Trench under pavement	1 location every 400 linear feet
Trench edge within 2 feet of pavement edge	1 location every 400 linear feet
Structural backfill	1 every 20 cubic yards
Embankment backfill	1 every 200 cubic yards
Base material	1 every 50 cubic yards

Confirmation tests shall be paid by the Contractor.

Copies of the test reports shall be submitted promptly to the inspector. The Contractor's tests shall be performed by a soils testing laboratory acceptable to the Inspector.

If compaction fails to meet the specified requirements, the Contractor shall remove and replace the backfill at proper density or shall bring the density up to specified level by other means acceptable to the inspector. Subsequent tests required to confirm and verify that the reconstructed backfill has been brought up to specified density shall be paid by the Contractor. The Contractor's confirmation tests shall be performed in a manner acceptable to the inspector. Frequency of confirmation tests for remedial work shall be double that amount specified for initial confirmation tests.

Section 7.11 REMOVAL OF DEFECTIVE OR EXCESS FILL:

Fill placement at densities lower than the specified minimum density or at moisture contents outside the specified acceptable range of moisture content or otherwise not conforming to the requirements of the specifications shall be reworked to meet the requirements or removed and replaced with acceptable fill. The replacement fill and the foundation, abutment and fill surfaces upon which it is placed shall conform to all requirements of this specification for foundation preparation, approval, placement, moisture control and compaction.

All excess or undesirable material that may be encountered in the work shall be disposed of by the contractor, in a manner approved by the Inspector, but it shall not be placed on other street or alleys without the Inspector's approval nor on private property without the approval of the owner, which approval shall be obtained by the contractor in writing.

Section 7.12 REMOVAL AND/OR REPLACEMENT OF EXISTING STRUCTRURES:

Should it be found necessary to remove, build and/or rebuild existing pipelines, flumes, monuments, manholes and other structures, or to reset metal covers and frames, etc., then said work shall be done as shown on the approved plans.

Section 7.13 EROSION CONTROL/ REVEGTATION

1. Definition: Placement of seed material or sod over open area for temporary or permanent erosion control.

2. Purpose: To Reduce velocity of storm water runoff and to reduce erosion by preventing rainfall directly hitting soil.
3. Application: All areas disturbed by construction activity, including cut and fill slopes.
4. Limitations: Revegetation on slopes steeper than 3:1 must utilize geotextiles to promote establishment of vegetative cover.
5. Installation of temporary seeding:
   (a) Grade and shape the area to be seeded so that it will drain properly and accommodate seeding equipment.
   (b) Loosen compacted soil by racking, or disking where hydraulic seeding will not be used, to provide for seed retention and germination.
   (c) Apply seed and fertilization suitable for the area and season. The seed species and fertilization requirements must be developed by a professional or the local Soil Conservation Service Office.
6. Installation of permanent seeding:
   (a) Grade Loosen compacted soil racking, or disking where hydraulic seeding will not be used, to provide for seed retention and germination.
   (b) Spread at least 3 inches of topsoil, if required, before seeding. If topsoil is required, the subsoil should be serrated or disked to provide an interface.
   (c) Apply seed and fertilization suitable for the area and season. The seed species and fertilization requirements must be developed by a professional or the local Soil Conservation Service Office.
7. Maintenance:
   (a) Inspect seeded areas after every rainfall event and at a minimum of monthly.
   (b) Replace seed on any bare areas, or area showing signs of erosion as necessary.

Section 7.14 EROSION CONTROL/ MULCHING

1. Definition: Placement of material such as straw, grass, wood-chips, wood-fibers or fabricated matting over open area.
2. Purpose: To reduce the velocity of storm water runoff; reduce erosion by preventing rainfall directly hitting the soil; and facilitate plant growth by holding seeds and fertilizer in place, retaining moisture and providing insulation against extreme temperatures.
3. Application: This shall apply to any of the following situations: Any exposed area to remain untouched; Any exposed area to remain untouched longer than 14 days and that will be exposed less than 60 days; Areas that have or will be seeded; or Stockpiled soil material.
4. Limitations: Anchoring may be required to prevent migration of mulch material. Down-gradient control may be required to prevent mulch material from being transported to the storm water system.
5. Installation: Rough area to revive mulch to create depressions that mulch material can settle into. Ensure material used is weed free and does not contain any constituent that will inhibit plant growth. Apply mulch to require thickness and anchor as necessary. Recommended application rates as follows:

Material	Application	Depth	Comments
Gravel: Washed ¾" to 1 ½"	9 cu yd/1000 sq ft	3 inches	Good for traffic areas. Good for short slopes.
Straw: Air-Dried, free of seeds and coarse material.	2-3 bales/1000 sq ft	2 inches (Min.)	Subject to wind blowing. Tack down or keep moist.
Wood Fiber Cellulose: Free from growth inhibitors; dyed green	25-30 lb/1000 sq ft	1 inch (Min.)	For critical areas, double application rate; Limit to slopes <3% and <150 feet

6. Maintenance: Inspect mulched areas after every rainfall event and at a minimum of monthly. Replace mulch and any bare areas and re-anchor as necessary. Clean and replace down-gradient controls as necessary.

DIVISION 8: PORTLAND CEMENT CONCRETE

Section 8.01 GENERAL:

This section defines the requirements for concrete type, class, aggregates, water air, water reducing, curing, testing, measurement, mixing, and placement. It also includes construction, expansion and contraction joints. It also includes surface finishing, curing, and replacement of defective concrete. Concrete placement in cold or hot weather conditions is also specified herein.

Section 8.02 CEMENT TYPE:

Portland cement shall be Type II and shall comply with the Standard Specification for Portland Cement, ASTM C-150. In areas where there is no exposure to sulfates in the soil or ground water, Type I cement is permissible. Cement content shall not be decreased because of the addition of certain admixtures. A certified analysis of the cement shall be presented to the City Engineer upon request.

Section 8.03 CLASS OF CONCRETE:

For the purpose of practical identification, concrete has been divided into four classes: Class AA(AE), A(AE), B(AE) and C(AE). The specific use for each Class is identified in the Division in which the concrete is used. The symbol (AE) designates air-entrainment. Basic requirements for each class are as follows:

Class of Concrete	Maximum Net Water Content (gallons/bag)	Minimum Cement Content (bags/cu. yd)	Minimum 28-day Comp. Strength (psi)	Typical Applications
AA(AE)	5	6 1/2	4000	Reinforced Structural Concrete
A(AE)	6	6	3500	Sidewalks- Curb & Gutter
B(AE)	7	5	2500	Reinforced footing and foundations
C(AE)	8	4	2000	Thrust Blocks

Section 8.04 CONCRETE AGGREGATE:

Aggregates shall conform to Tentative Specifications for Concrete Aggregates, ASTM C-33 for the specified sizes. Aggregates that fail to meet any requirement may be accepted only when: (1) the specified alternate conditions of acceptance can be proved prior to the use of the aggregates on the job and within a period of time such that no work under the contract will be delayed by the requirements of such proof; or, (2) the specification for concrete expressly contains a provision of special mix requirements to compensate for the effects of the deficiencies.

The potential reactivity of aggregates with the alkalis in cement shall be evaluated by petrographic examination and, where applicable, the chemical method of test, ASTM Designation C 289, or by the results of previous tests or service records of concrete made from similar aggregates from the same source. The standards for evaluating potential reactivity shall be as described in ASTM Specification C-33, Appendix A1.

Aggregates indicated to be potentially reactive, but within acceptable limits as determined by mortar bar test results or service records, shall be used only with "low alkali" cement, containing less than 0.60 per cent alkalis expressed as sodium oxide.

Aggregates indicated by any of the above to be potentially reactive shall not be used, except under one of the following conditions:

1. Applicable test results of mortar bar tests, made according to ASTM Method C-227, are available which indicate an expansion of less than 0.10 per cent at six months in mortar bars made with cement containing not less than 0.8 per cent alkalis expressed as sodium oxide; or

2. Concrete made from similar aggregates from the same source has been demonstrated to be sound after 3 years or more of service under conditions of exposure to moisture and weather similar to those anticipated for the concrete under these specifications.

Aggregate of each class and size shall be stored and handled by methods that prevent segregation of particle sizes or contamination by intermixing with other materials.

Aggregates maximum size shall be not larger than one-fifth (1/5) of the narrowest dimension between forms within which the concrete is to be cast, nor larger than three-fourths (3/4) of the minimum clear spacing between reinforcing bars or between reinforcing bars and forms. For un-reinforced concrete slabs, the maximum size of aggregates shall not be larger than one-fourth (1/4) the slab thickness.

Section 8.05 WATER FOR CONCRETE:

Water shall be cleaned and free from injurious amounts of oil, salt, acid, alkali, organic matter or other deleterious substances. Water shall be added to the mix to produce concrete with the minimum practicable slump. The slump of mechanically vibrated concrete shall not exceed four-inch (4"). No concrete shall be placed with a slump in excess of four-inch (4").

Section 8.06 AIR ENTRAINMENT:

If air-entraining cement is to be used, the Developer/Contractor shall furnish the manufacturers written statement giving the source, amount and brand name of the air-entraining addition.

Air-entraining agent shall be used in all concrete exposed to the weather. The air-entraining agent shall be added as liquid to the mixing water by means of mechanical equipment capable of accurate measurement and control. The agent shall conform to ASTM Designation C-175 and C-260, except that the relative durability factor in the freezing and thawing test shall be not less than 95. Air-Content for air-entrained concrete shall comply with the following:

Course Aggregate Size (in.)	Air Content (percent)
1 1/2 to 2 1/2	5 ± 1
3/4 or 1	6 ± 1
3/8 or 1/2	7 ± 1

Section 8.07 STEEL REINFORCEMENT:

Refer to Division 9 Reinforcing Steel

Section 8.08 WATER REDUCING AGENT:

Water reducing, set retarding admixtures shall not be used except with previous approval from the Public Works Director/Engineer and shall in such a case, conform to the standards of materials set forth in the specification.

Water-reducing and set-retarding admixtures shall conform to the requirements of ASTM Specification C-494, except that resistance to freezing and thawing shall be determined in all cases, and the minimum relative durability factor shall be 95.

Admixtures shall be Type A, Water-Reducing or Type D, Water-Reducing and Retarding, as defined in ASTM Specification C-494.

When added, in the manner and amount recommended by the manufacturer, to the concrete used on the job, with no change in the cement content or proportions of the aggregates, admixtures shall have the following effects:

> Type A or Type D: The water content at the required slump shall be at least 5 per cent less with the admixture than without. The air content shall remain within the range specified, but shall not exceed 8 per-cent in any case.
>
> Type D: The time of initial setting, determined as prescribed in ASTM C-494, shall be from 1 to 3 hours longer with the admixture than without.

Section 8.09 CURING COMPOUND:

Curing compound for concrete shall meet the requirements of ASTM Specification C-309.

Unless otherwise specified, the compound shall be Type 2.

All curing compound shall be delivered to the site of the work in the original container bearing the name of the manufacturer and the brand name. The compound shall be stored in a manner to prevent damage to the containers and to protect water-emulsion types from freezing.

Section 8.10 DESIGN OF THE CONCRETE MIX:

The proportions of the aggregates shall be such as to produce a concrete mixture that will work readily into the corners and angles of the forms and around reinforcement when consolidated, but will not segregate or exclude free water during consolidation.

Prior to placement of concrete, the Developer/ Contractor shall furnish the Public Works Representative/ Engineer, for approval, a statement of the materials and mix proportions (including admixtures, if any) it intends to use. The statement shall include evidence satisfactory to the Public Works Director/Engineer that the materials and proportions will produce concrete conforming to this specification. The materials and proportions so stated shall constitute the "job mix." After the job mix has been reviewed for conformance to specification by the Public Works Representative/ Engineer, neither the source, character, grading of the aggregates, the type and brand of cement, nor admixture shall be changed without prior notice to the Public Works Representative/ Engineer. If such changes are necessary, no concrete containing such new or altered materials shall be placed until the Public Works Director/ Engineer has approved a revised job mix.

Section 8.11 OBSERVATION AND TESTING:

It shall be the responsibility of the Developer/ Contractor to test the concrete during construction to ensure that it meets the city specifications. The city reserves the right to randomly test the concrete to verify that the construction conforms to the requirements of the specifications. Such tests are not intended to provide the Developer/ Contractor with the information required by it for the proper execution of the work and their performance shall not relieve the Developer/ Contractor of the necessity of completing the construction in accordance with these specifications and Standard Drawings.

The Public Works Director/ Engineer shall have free entry to the plant and equipment furnishing concrete under the contract. Proper facilities shall be provided for the Public Works Director/Engineer to observe the materials, equipment and processes and to obtain samples of the concrete. All tests and observations will be conducted so as not to interfere unnecessarily with manufacture and delivery of the concrete. Not less than one test shall be made for each 150 cubic yards of concrete, nor less than one test for each day's concreting. These tests shall be made at the option of the Inspector.

The City reserves the right to forbid the use of material from any plant, pit or source when the character of material, equipment in use or the method of operation is such, in his opinion as to make it doubtful that a reasonable uniform class of material will be furnished.

Section 8.12 HANDLING AND MEASUREMENT OF MATERIALS:

Cement shall be stored in such a manner as to be protected from weather, dampness or other destructive agents. Cement that is partially hydrated or otherwise damaged will be rejected.

Materials shall be stockpiled and batched by methods that will prevent segregation or contamination of aggregates and insure accurate proportioning of the ingredients of the mix.

Cement and aggregates shall be measured as follows:

Cement shall be measured by weight or in bags of 94 pounds each. When cement is measured in bags, no fraction of a bag shall be used unless weighed.

Aggregates shall be measured by weight. Mix proportions shall be based on saturated, surface-dry weights. The batch weight of each aggregate shall be the required saturated, surface-dry weight plus the weight of surface moisture it contains.

Water shall be measured by weight, to accuracy within one per cent of the total quantity of water required for the batch.

Admixtures shall be measured within a limit of accuracy of 3 per cent.

Section 8.13 MIXERS AND MIXING:

Concrete shall be uniform and thoroughly mixed when delivered to the work. Proper mixing shall be accomplished either by truck or by stationary mixers. Variations in slump of more than 1 inch within a batch will be considered evidence of inadequate mixing and shall be corrected by increasing mixing time or other means. For stationary mixers, the mixing time after all cement and aggregates are in the mixer drum shall be not less than 1 1/2 minutes. When concrete is mixed in a truck mixer, the number of revolutions of the drum or blades at mixing speed shall be not less than 70 or more than 100.

Unless otherwise specified, volumetric batching and continuous mixing at the construction site will be permitted if approved by Public Works Representative/Engineer. The batching and mixing equipment shall conform to the requirements of ASTM Specification C-685 and shall be demonstrated prior to placement of concrete, by tests with the job mix, to produce concrete meeting the specified proportioning and uniformity requirements. Concrete made by this method shall be produced, inspected, and certified in conformance with Sections 6, 7, 8, 13, and 14 of ASTM Specification C-685.

No mixing water in excess of the amount called for by the job mix shall be added to the concrete during mixing or hauling or after arrival at the delivery point.

Section 8.14 FORMS:

Forms shall be of wood, plywood, steel or other approved material and shall be mortar tight. The forms and associated false-work shall be substantial and unyielding and shall be constructed so that the finished concrete will conform to the specified dimensions and contours. Form surfaces shall be smooth and free from holes, dents, sags or other irregularities. Forms shall be coated with non-staining form oil before being set into place.

Metal ties or anchors within the forms shall be equipped with cones, she-bolts or other devices that permit their removal to a depth of at least one inch without injury to the concrete.

All edges that will be exposed to view when the structure is completed shall be chamfered by placing molding in the forms, unless finishing with molding tools.

Section 8.15 PREPARATION OF FORMS AND SUBGRADE:

Prior to placement of concrete the forms and subgrade shall be free of chips, sawdust, debris, water, ice, snow, extraneous oil, mortar, or other harmful substances or coatings. Any oil on the reinforcing steel or other surfaces required to be bonded to the concrete shall be removed. Rock surfaces shall be cleaned by air-water cutting, wet sandblasting or wire brush scrubbing, as necessary, and shall be wetted immediately prior to placement of concrete. Earth surfaces shall be firm and damp. Placement of concrete on mud, dried earth or uncompacted fill or frozen subgrade will not be permitted.

Unless otherwise specified, when concrete is to be placed over drain fill, the contact surface of the drain fill shall be covered with a layer of asphalt-impregnated building paper or polyvinyl sheeting prior to placement of the concrete. Forms for weep-holes shall extend through this layer into the drain fill.

Items to be embedded in the concrete shall be positioned accurately and anchored firmly. Weep-holes in walls or slabs shall be formed with nonferrous materials.

The place of deposit shall be prepared by adequate forming, proper compaction, necessary drainage, and sufficiently moistened to minimize loss from the freshly placed concrete.

Section 8.16 CONVEYING:
The transporting equipment shall be such as to deliver the concrete to the place of use without segregation and without undue loss of moisture.

Concrete shall be delivered to the site and discharged into the forms within 1 1/2 hours after the introduction of the cement to the aggregates. In hot weather or under conditions contributing to quick stiffening of the concrete, the time between the introduction of the cement to the aggregates and discharge shall not exceed 45 minutes. The Public Works Director/ Engineer may allow a longer time, provided the setting time of the concrete is increased a corresponding amount by the addition of an approved set-retarding admixture. In any case, concrete shall be conveyed from the mixer to the forms as rapidly as practicable by methods that will prevent segregation of the aggregates or loss of mortar.

Section 8.17 CONCRETE BATCH TICKET:

An original copy of the concrete batching ticket shall be given to the City inspector, at time of delivery. Ticket shall include the plant designation, ticket number, mix design number, slump, air entrainment, type of concrete, gallons of water added on site, time of leaving plant, time of arrival on site and bag mix. Concrete could be rejected if ticket is not available and does not meet City standards.

Section 8.18 BEFORE PLACING CONCRETE:

Concrete shall not be placed until the sub-grade, forms and steel reinforcement have been inspected and approved. No concrete shall be placed except in the presence of the Public Works Representative/ Engineer. The Developer/ Contractor shall give 48-hour notice to the Public Works Director/ Engineer each time it intends to place concrete. Such notice will give the Public Works Director/ Engineer adequate time to inspect the subgrade, forms, steel reinforcement and other preparations for compliance with the specifications before concrete is delivered for placing.

Section 8.19 PLACING CONCRETE:

The concrete shall be deposited as closely as possible to its final position in the forms and shall be worked into the corners and angles of the forms and around all reinforcements and embedded items in a manner to prevent segregation of aggregates or excessive laitance. Unless otherwise specified, slab concrete shall be placed to design thickness in one continuous layer. Formed concrete shall be placed in horizontal layers not more than 20 inches thick. Hoppers and chutes, pipes or "elephant trunks" shall be used as necessary to prevent splashing of mortar on the forms and reinforcing steel above the layers being placed.

Section 8.20 AFTER PLACING CONCRETE:

Immediately after the concrete is placed in the forms, it shall be consolidated by spading, hand tramping or vibration as necessary to insure smooth surfaces and dense concrete. Each layer shall be consolidated to insure monolithic bond with the preceding layer. If the surface of a layer of concrete in place sets to the degree that it will not flow and merge with the succeeding layer when spaded or vibrated, the Developer/ Contractor shall discontinue placing concrete and shall make a construction joint according to the procedure specified.

If placing is discontinued when an incomplete horizontal layer is in place, the unfinished end of the layer shall be formed by a vertical bulkhead.

Section 8.21 PLACING CONCRETE IN WALLS:

If the concrete is being placed in walls or structures more than five feet high, it shall be deposited into final position by means of tremies or similar equipment, and the maximum lateral movement of the concrete from any point of deposit shall not be more than five feet. It shall be deposited in even layers, not more than 24 inches in depth, and each layer shall be thoroughly vibrated preceding lift and next to the forms to insure a smooth surface and the removal of air pockets. Particular attention shall also be given to working of the concrete around reinforcing steel and embedded fixtures in such manner as to produce a continuous homogeneous mass filling all corners and

eliminating segregation of aggregate and air pockets. An internal vibrator shall be inserted vertically at intervals of from 18 inches to 30 inches, depending on the thickness of the concrete. It shall be held in position and gradually withdrawn when air bubbles no longer come to the surface, which will usually require from five to fifteen seconds. All concrete shall be vibrated within 15 minutes after being placed in the forms. The vibrator shall not be permitted to come in contact with the forms, the reinforcing steel or embedded fixtures or to over-vibrate the concrete at any point. Concrete shall not be transported laterally by means of vibrators.

Section 8.22 JOINING TO CURED CONCRETE

In joining new concrete to old, the old concrete shall be thoroughly treated with concrete epoxy preceding the lacing of the new concrete. All surface film shall be removed from the old concrete, the surface roughened and thoroughly washed to remove loose particles. The methods employed to prepare the surface of the old concrete shall be approved by the inspector in advance. A layer of mortar of the same proportions and consistency as the mortar used in the new concrete shall be thoroughly boomed into the surface of the old concrete, immediately before the new concrete is placed, but no pools of water shall be permitted on the surface of the old concrete when the mortar is placed.

Section 8.23 CONSTRUCTION JOINTS:

Construction joints shall be made at the locations shown on the Drawings. If construction joints are needed which are not shown on the Drawings, they shall be placed in locations approved by the Public Works Representative/ Engineer.

Where a featheredge would be produced at a construction joint, as in the top surface of a sloping wall, an inset form shall be used so that the resulting edge thickness on either side of the joint is not less than six-inches (6").

In walls and columns, as each lift is completed, the top surfaces shall be immediately and carefully protected from any condition that might adversely affect the hardening of the concrete.

Steel tying and form construction adjacent to concrete in place shall not be started until the concrete has cured at least 12 hours. Before new concrete is deposited on or against concrete that has hardened, the forms shall be retightened. New concrete shall not be placed until the hardening concrete has cured at least 12 hours.

Surfaces of construction joints shall be cleaned of all unsatisfactory concrete, laitance, coatings or debris by washing and scrubbing with a wire brush or wire broom or by other means approved by the Public Works Representative/ Engineer. The surfaces shall be kept moist for at least one hour prior to placement of the new concrete.

Section 8.24 EXPANSION AND CONTRACTION JOINTS:

Expansion and contraction joints shall be made only at locations shown on the drawings.

Exposed concrete edges at expansion and contraction joints shall be carefully tooled or chamfered, and the joints shall be free of mortar and concrete. Joint filler shall be left exposed for its full length with clean and true edges.

Preformed expansion joint filler shall be held firmly in the correct position as the concrete is placed.

Open joints, when specified, shall be constructed by the insertion and subsequent removal of a wooden strip, metal plate or other suitable template in such a manner that the corners of the concrete will not be chipped or broken. The edges of open joints shall be finished with an edging tool prior to removal of the joint strips.

Section 8.25 WATERSTOP:

Waterstops shall be held firmly in the correct position as the concrete is placed. Joints in metal waterstops shall be soldered, brazed or welded. Joints in rubber or plastic waterstops shall be cemented, welded or vulcanized as recommended by the manufacturer.

Section 8.26 REMOVAL OF FORMS:

Forms shall not be removed without the approval of the Public Works Representative/ Engineer. Forms may be removed when the concrete has sufficient strength to carry its own weight and the loads upon it with safety (approximately 75% of design strength or at the discretion of the engineer.) Forms shall be removed in such a way as to prevent damage to the concrete. Supports shall be removed in a manner that will permit the concrete to take the stresses due to its own weight uniformly and gradually.

Section 8.27 FINISHING FORMED SURFACES:

Immediately after the removal of the forms all fins and irregular projections shall be removed from exposed surfaces. On all surfaces, the holes produced by the removal of form ties, cone-bolts, and she-bolts shall be cleaned, wetted and filled with a dry-pack mortar consisting of one part Portland cement, three parts sand that will pass a No. 16 sieve, and water just sufficient to produce a consistency such that the filling is at the point of becoming rubbery when the material is solidly packed.

Section 8.28 FINISHING UNFORMED SURFACES:

Finishing shall provide a pleasant appearing surface, as well as a protective coat against weathering effects. All exposed surfaces on the concrete shall be accurately screeded to grade and then float finished, unless specified otherwise. Excessive floating or troweling of surfaces while the concrete is soft will not be permitted. The addition of dry cement or water to the surface of the screeded concrete to expedite finishing will not be allowed. Joints and edges on unformed surfaces that will be exposed to view shall be chamfered or finished with molding tools.

Section 8.29 CURING AND PROTECTION:

Concrete shall be prevented from drying for a curing period of at least 7 days after it is placed. Exposed surfaces shall be kept continuously moist for the entire period, or until curing compound is applied as specified below. Sprinkling, flooding or fog spraying shall maintain moisture or by covering with continuously moistened canvas, cloth mats, straw, sand or other approved material. Wood forms (except plywood) left in place during the curing period shall be kept wet. Formed surfaces shall be thoroughly wetted immediately after forms are removed and shall be kept wet until patching and repairs are completed. Water or covering shall be applied in such a way that the concrete surface is not eroded or otherwise damaged. As soon as the concrete has hardened sufficiently to prevent damage, the finished surface shall be protected for curing one of the following ways:

1. Application of light colored waterproof plastic materials, conforming to "Specifications for Waterproof Sheet Materials for Curing Concrete" ASTM C-171, placed and maintained in contact with the surface of the concrete.

2. Application of a curing compound, conforming to "Specifications for Liquid Membrane - Forming Compounds for Curing Concrete" ASTM C-309. The compound shall be light in color and shall be applied in accordance with the manufacturer's recommendations immediately after any water sheen, which may develop after finishing, has disappeared from the concrete surface.

3. Ponding of water on the surface or continuous sprinkling.

4. Application of absorptive mats such as three-inches (3") of cured hay, clean straw or fabric kept continuously wet.

5. Application of two-inches (2") of moist earth or sand uniformly distributed on the surface and kept saturated by spraying with water.

Curing compound shall not be applied to surfaces requiring bond to subsequently placed concrete, such as construction joints, shear plates, reinforcing steel and other embedded items. If the membrane is damaged during the curing period, the damaged area shall be re-sprayed at the rate of application specified above.

Section 8.30 REMOVAL OR REPAIR:

When concrete is honey combed, damaged or otherwise defective, the Developer/Contractor shall remove and replace the structure or structural member containing the defective concrete or, where feasible, correct or repair the defective concrete. Prior to starting repair work the Developer/ Contractor shall obtain the Public Works Representative/ Engineer's approval of its plan for effecting the repair. The Developer/ Contractor shall perform all repair work in the presence of the Public Works Representative/Engineer. In all cases the contractor shall assume all responsibility arising from preparing, placing, and the removal of forms, and shall assure himself that the concrete is properly cured to sustain loads before forms are removed.

Section 8.31 CONCRETING IN COLD WEATHER:

Concrete shall not be mixed nor placed when the daily minimum atmospheric temperature is less than 40 degrees unless facilities are provided to prevent the concrete from freezing. The use of accelerators or antifreeze compounds will not be allowed. ACI 306R: Cold weather concreting shall be followed.

If the contractor desires to place concrete in cold weather he shall assume all responsibility for damage that may be caused by freezing or by any other cause, even though permission to proceed may have been given by the Engineer. In no case, however, shall concrete be placed when the temperature is 40° Fahrenheit and falling, unless the contractor has complied with the following requirements and such additional precautions:

(a) Provision shall be made for heating the water and, if necessary, the aggregates, also. If the aggregates are heated, it shall preferably be done with steam by means of closed steam coils.

(b) All concrete materials, forms, fillers and ground with which the concrete is to come in contact shall be free from frost.

(c) The temperature of the mixed concrete when placed in the forms shall be between 50°F. and 70°F., depending on the temperature of the air. Whenever the temperature of the surrounding air is below 40 degrees Fahrenheit, all concrete when placed in forms shall have a minimum temperature of 50 degrees Fahrenheit and shall be maintained at a temperature of not less than 40 degrees Fahrenheit for at least 72 hours.

(d) Concrete subject to freeze/thaw shall be air entrained to a content of 6% + 1.5%

(e) When the concrete has been placed, the forms and concrete shall be covered with tarpaulins or other approved covering and a sufficient number of perforated steam pipes provided under the covering to maintain the temperature needed to ensure proper curing.

(f) The use of any admixture to lower the freezing point of the concrete is forbidden.

(g) No concrete shall be placed upon a frozen subgrade and no frozen materials shall be used in the concrete.

(h) Replacement of concrete in temperatures below 50 F shall be provided with additional expansion material at each end of area affected and covered to prevent damage to concrete during curing process.

(i) Salamanders shall not be used without special permission from the City Engineer, and if the use of salamanders is permitted, then each salamander shall have a vessel containing water placed on it in order to maintain the necessary humidity to prevent drying of the concrete. Water shall be maintained continuously in the vessel.

(j) The material shall be free from ice, snow and frozen lumps when introduced into mixer.

Section 8.32 CONCRETING IN HOT WEATHER:

The Developer/Contractor shall apply effective means to maintain the temperature of the concrete below 90 degrees during mixing, conveying and placing. ACI 305R: Hot weather concreting shall be followed.

Whenever the ambient temperature is above 80°F or the humidity is below 10%, the City Engineer may, at his discretion, require trial batches to determine the period of initial set. If, in the opinion of the City Engineer, weather

conditions are such that the initial set is accelerated, the maximum period specified for mixing, placement and compaction shall be reduced to allow at least 10 minutes time before initial set. The term "initial set" shall be construed as the time in which, in the opinion of the engineer, the concrete is no longer workable. Necessary steps will be taken at the direction of the engineer to protect the concrete from undesirable effects of heat. These steps may include:

(a) Spraying forms, reinforcing steel and subgrade to prevent absorption of water from mix.

(b) Erecting sun shades and wind breaks.

(c) Protect slabs before final finishing by covering with waterproof cover or visqueen.

(d) Spraying outside of forms to cool concrete.

(e) Cooling mixing water.

(f) Spraying coarse aggregate to reduce temperature.

Section 8.33 CONCRETE WASTE

Waste Concrete Disposal all waste concrete shall be disposed of within an approved location according to E.P.A. standards including any washout of chutes of trucks and trailers. This site shall be established by the developer for each phase and or construction site as approved by the inspector

DIVISION 9: REINFORCING STEEL

Section 9.01 GENERAL:

This section defines the requirements for reinforcement material, size, clearance, fabrication, support, splicing, placing, coating, cutting, and inspecting. These specifications shall apply where the International Building Code does not.

Section 9.02 MATERIAL:

Use deformed billet-steel bars as specified. All reinforcing bars used for concrete reinforcement shall be Grade 60 deformed bars conforming to ASTM A615 and shall include the supplementary requirements. Wire Fabric shall conform to ASTM A185-70. Steel reinforcement shall be free from rust, oil, grease, paint or other deleterious matter. All steel shall be clean and free from mill scale, flakes of loose rust, cement, concrete, paint, oil, grease or any other foreign material.

Section 9.03 PRE-APPROVAL OF REINFORCEMENT:

Before supply of steel, the Developer/Contractor shall provide all order lists and bending diagrams for approval of the Public Works Representative/ Engineer. The approval of such lists and diagrams shall in no way relieve the Developer/Contractor of responsibility for the correctness of reinforcing supplied and all expenses incidental to revision of furnished reinforcing steel shall be carried by the Developer/Contractor.

Section 9.04 FABRICATION:

Reinforcement shall be cold bent to the shapes shown in accordance with ACI 1997 Standard Code (ACI 318-97) Chapter 7 Section 7.1. If the fabric reinforcement is shipped in rolls, it shall be straightened into flat sheets before being placed.

Section 9.05 SIZE AND CLEARANCE:

All bars shall be of the size specified and shall be placed in the positions shown on the Drawings in such a manner as to be firmly held during the placing of the concrete. Where not otherwise indicated, minimum clearance and cover as required by the ACI Code, Section 7.7 shall be maintained.

Reinforced Clearances for Cast In Place Concrete (Not Pre-stressed)

Concrete cast against and permanently exposed to earth	Min Cover (inch)
All Bars	3
Concrete exposed to earth or weather:	
No. 6 through No. 18 Bar	2
No. 5 Bar, W31 or D31 wire, and smaller	1 1/2
Concrete not exposed to weather or in contact with ground:	
Slabs, Walls, and Joists: No. 14 and no. 18 Bar	1 1/2
Slabs, Walls, and Joists: No. 11 Bar and smaller	3/4
Beams, Columns: Primary reinforcements, ties, stirrups, spirals	1 1/2
Shells, Folded Plate Members: No. 6 Bar and larger	3/4
Shells, Folded Plate Members: No. 5 Bar, W31 or D31 wire, and smaller	1/2

Reinforced Clearances for Precast Concrete (Manufactured Under Plant Controlled Conditions)	
Concrete exposed to earth or weather:	Min Cover (inch)
Wall Panels: No. 14 and No. 18 Bars	1 1/2
Wall Panels: No. 11 Bar and smaller	3/4
Other Members: No. 14 and No. 18 Bars	2
Other Members: No. 6 through No. 11 Bars	1 1/2
Other Members: No. 5 Bar, W31 or D31 wire, and smaller	1 1/4
Concrete not exposed to weather or in contact with ground:	
Slabs, Walls, Joists: No. 14 and No. 18 Bars	1 1/4
Slabs, Walls, Joists: No. 11 Bar and smaller	5/8
Beams, Columns: Primary reinforcement	1 1/2
Beams, Columns: Ties, stirrups, spirals	3/8
Shells, folded plate members: No. 6 Bar and larger	5/8
Shells, folded plate members: No. 5 Bar, W31 or D31, and smaller	3/8

Section 9.06 SUPPORT:

Bars shall be tied at all intersections except where the spacing is less than twelve inches (12") where alternate intersections shall be tied. Distance from supports shall be by means of ties, hangers, or other approved supports. Metal chairs of approved design shall be used to hold reinforcement from contact with the forms. Metal chairs that are in contact with the exterior surface of the concrete shall be galvanized. When placing concrete directly on a prepared subgrade, reinforcing shall be separated by precast mortar blocks or by other equally suitable devices. The use of stones, pieces of broken brick, metal pipe, or wooden blocks shall not be permitted. Reinforcement in any member shall be placed and then inspected and approved by the Public Works Director/ Engineer before the placement of concrete begins. Concrete placed in violation of this provision may be rejected in which case removal will be required.

Section 9.07 SPLICING:

All splices shall be staggered so that splices in adjacent bars shall be not less than four feet (4') apart, and shall conform to ACI Code Section 12.15.

Section 9.08 PLACING:

All reinforcement bars shall be placed accurately, as shown on the plans, wired at intersections and spaced and supported by means of metal chairs, spacers, hangers or other devices approved by the Inspector. The placing of bars on layers of fresh concrete as the work progresses will not be permitted. The reinforcement shall be securely bound together and rigidly held in the required position. Where splices are made, the base shall be tapped 40 diameters or a minimum of 20 inches and tightly wired together.

Section 9.09 EPOXY COATING:

Sub-section A. <u>Prequalify all Coatings:</u>

Ensure that epoxy coating applicator has Concrete Reinforcing Steel Institute (CRSI) fusion bonded epoxy coating applicator plant certification. Furnish a copy of the Prequalification Test Report to the Public Works Representative/Engineer. Provide an 8-ounce sample of the coating material from each batch.

Sub-section B. <u>Coat Bars as Specified:</u>

The following requirements shall be followed:

- Maintain the coating thickness between 8 and 12 mils.
- Coat bars after bending, unless the fabricator can show that satisfactory results can be obtained by coating before bending
- Reject any bent bars with visible cracks or damage in the coating.

Sub-section C: Handling:

Do not damage the bars or the coating during handling and storage.

- Use systems with padded contact areas when handling coated bars.
- Pad all bundling bands.
- Lift all bundles with strong back, multiple supports, or a platform bridge.
- Do not drop or drag bars.
- Repair damaged bars or coating at no additional cost to the Owner.
- Use patching material per manufacturer's recommendation to repair damaged coating.
- Have the coated bars inspected for damage to the coating after the bars are in place and immediately before concrete placement.
- Repair all visible defects using the specified patching or repair material.

Section 9.10 FIELD CUTTING:

Sub-section A. Cutting and Bending:

All cutting and bending shall be done at the mill or shop unless provisions satisfactory to the Inspector are made for handling this work in the field. The radius of curvature of the bends shall not be less than 4 diameters. All bending shall be done cold. Heating preparatory to bending will not be permitted. All steel shall conform accurately to the dimensions shown on the plans. Saw or shear epoxy-coated bars that are specified to be cut in the field. Do not flame cut.

Sub-section B. Repairing:

Repair the sawed or sheared end using the specified patching or repair material.

Section 9.11 INSPECTION:

Inspection. No concrete shall be placed in any reinforced concrete structure until the steel and its placement have been inspected and approved by the Inspector and he has given permission to proceed with the placing of concrete. Any concrete placed in violation hereof shall be rejected and shall be removed by the contractor at his own expense.

Section 9.12 STORAGE AND PROTECTION:

Storage and Protection. All reinforcement steel shall be stored in such manner as to be protected from the elements. It shall be stored above ground on skids or other supports and shall be protected against corrosion, mechanical injury, and physical damage. No bars that are bent, twisted, kinked or warped shall be used in the work. No bars that have been bent shall be straightened and used in the work.

DIVISION 10: RESTORATION OF SURFACE IMPROVEMENTS

Section 10.01 GENERAL:

This Section defines the requirements for surface removals, trench repair, surface restorations including hardscape and landscape, pavement markings, and moratorium.

The Developer/Contractor shall be responsible for the protection and the restoration or replacement of any improvements existing on public or private property at the start of work or placed there during the progress of the work.

Existing improvements shall include but not be limited to permanent surfacing, curbs, gutters, sidewalks, planted areas, ditches, driveways, culverts, fences, and walls. All improvements shall be reconstructed to equal or better, in all respects, than the existing improvements removed.

Section 10.02 FIELD VERIFICATION OF IMPROVEMENTS:

In submitting a bid, the Developer/Contractor will be deemed to have carefully examined the site of the work and to have acquainted itself with all conditions relating to the protection and restoration of existing improvements. The Public Works Director/Engineer does not guarantee that all improvements are shown on the Drawings, and it shall be the Developer/Contractor's responsibility to provide in its bid for the protection and restoration of all existing improvements whether or not each is provided for specifically on the Drawings and/or Bid Form.

Section 10.03 REMOVAL OF PAVEMENT, SIDEWALKS, CURBS, ETC.:

The pavement, sidewalk, curb and gutter, driveway, etc. shall be cut vertically parallel to the lines forming the trench, or at the nearest full joint, in such a manner as to not cause damage to adjoining pavement, sidewalk, curb and gutter, driveway, etc. The portion to be removed shall be broken up in a manner that will not cause damage to the pavement or concrete outside the limits of the trench; however, any pavement damaged by operations outside the limits of the trench shall be replaced at the Developer/Contractor's expense. Broken paving materials shall be removed immediately from the site of the work.

Section 10.04 MATERIALS:

Materials used for repair or replacement of surface improvements shall be equal to or better than the material removed. Concrete shall comply with Division 8 of these Standard Specifications. Concrete shall be Class AA(AE). The bituminous surface shall be hot-rolled plant mix in accordance with Division 11. Untreated base course shall comply with the requirements of Division 11. The Public Works Director/ Engineer shall take samples of the untreated base course on a random basis. All materials not meeting the tolerance requirements shall be removed from the project and replaced with specification material.

Section 10.05 RESTORING BITUMINOUS, CONCRETE, OR ASPHALT STREET SURFACES:

Between street intersections, unless otherwise ordered by the engineer, the backfilling shall be built up slightly above the surface of the pavement, oiled and maintained in good condition until the contractor is ready to place the new pavement, when the backfilling shall be removed to the subgrade elevation or bottom of the pavement. This work shall be done accurately to the proper elevation and all loose material removed. If any material is removed below the established subgrade elevation, said space shall be filled with similar material to that used for pavement base, at the contractor's expense, after which the new pavement shall be placed according to the City's specifications for the type of pavement that was removed, or such other type as may have been ordered to replace it.

At street intersections a temporary pavement, satisfactory to the Inspector, shall be placed and maintained in good condition until the contractor is ready to place the new pavement, when it shall be removed accurately to the subgrade elevation of the pavement and the new pavement placed according to the City's specifications for the type of pavement that was removed, or such other type of pavement as may have been ordered to replace it.

Such temporary bridges as may be required to properly handle the traffic during the progress of the construction shall be built, maintained and removed at the contractor's expense.

All area affected by excavation will require new asphalt cement to be replaced in a manner as shown in the Standard Drawings according to approved "T" patch to prevent premature joint failure above trench edges. If the trench patch exceeds sixty (60) percent of the existing lane of travel, the lane in its entirety to the crown shall be replaced. This shall be for work that runs parallel with direction of travel exceeding 20 feet in length. The removed asphalt concrete shall be replaced with AC-20, ¾ -Design Mix per APWA Standard Specification Section 32 12 03, PAVING ASPHALT. The patch shall be placed in compliance with Standard Drawings.

Section 10.06 MORATORIUM

This standard applies to new streets, streets that have been reconstructed and overlaid streets. Exceptions may be made at the city's discretion and for emergency situations.
Overlaid Streets: Overlaid streets shall not be cut for ~~one~~ two (~~1~~2) year from the time the street was overlaid.
New Streets: New streets shall not be cut for ~~two~~ three (~~2~~3) years from the time construction.
Reconstructed Streets: Reconstructed streets shall not be cut for ~~two~~ three (~~2~~3) years from the time of reconstruction.

Section 10.07 SPECIAL RESTORATION STANDARD

This standard applies to new streets, streets that have been reconstructed, overlaid, and surface treatments such as slurry seal and chip seal. Streets having a moratorium, which are cut, must be restored to the following requirements:

New Streets: (For five years after moratorium ends) The asphalt surface shall be milled down a minimum depth of two (2) inches fifteen feet each way of the edge of the cut. Milling shall be done in widths equivalent to existing striped traffic lanes. The Engineer reserves the right to require and area length greater than fifteen (15) feet each way of cut or a depth greater than two (2) inches if deemed appropriate to restore the roadway to the original condition. If a fabric was placed prior to asphalt placement or overlay, an approved fabric shall be place prior to asphalt patch.

Reconstructed Streets: (For five years after moratorium ends) The asphalt surface shall be milled down a minimum depth of two (2) inches fifteen feet each way of the edge of the cut. Milling shall be done in widths equivalent to existing striped traffic lanes. The Engineer reserves the right to require and area length greater than fifteen (15) feet each way of cut or a depth greater than two (2) inches if deemed appropriate to restore the roadway to the original condition. If a fabric was placed prior to asphalt placement or overlay, an approved fabric shall be place prior to asphalt patch.

Overlaid Streets: (For three years after moratorium ends) The asphalt surface shall be milled down a minimum depth of two (2) inches fifteen feet each way of the edge of the cut. Milling shall be done in widths equivalent to existing striped traffic lanes. The Engineer reserves the right to require and area length greater than fifteen (15) feet each way of cut or a depth greater than two (2) inches if deemed appropriate to restore the roadway to the original condition. If a fabric was placed prior to asphalt placement or overlay, an approved fabric shall be place prior to asphalt patch.

~~Slurried~~ High Density Mineral Bond & Chip Seal Streets: (For two~~one~~ years after placement only) An area not less than (15) fifteen feet, in any direction, from the edge of the cut shall ~~be re-slurried~~have high density mineral bond or chip seal reapplied. If ~~slurry~~ the high density mineral bond or chip seal area extends partially into a traffic lane, then full lane width must also be ~~slurried~~reapplied.

Section 10.08 FLOWABLE FILL:

The Engineer reserves the option of requiring flowable fill in the trench/pit restoration.

Section 10.09 TESTING:

All compaction testing shall be done by contractor/developer. All densities must meet current specifications.

Section 10.10 TRENCH REPAIR PROCEDURE:

Where trenches are in or cross bituminous asphalt or concrete surfaced roads, traffic lanes, driveways, parking areas, etc., the bituminous or concrete surface shall be cut, restored as quickly as there is sufficient quantity to make it practical, weather permitting, and maintained as follows:

Sub-section A. Before Excavation.

All existing asphalt or concrete surfaces shall be saw-cut or roto-milled to a square edge before excavation.

Sub-section B. Temporary Graded Surface.

Until resurfacing can be done in paved areas a temporary gravel surface shall be placed deep enough to provide a minimum depth as indicated on the Standard Drawings below the bottom of the bituminous surface and shall be brought flush with the paved surface.

The untreated base shall be placed in the trench at the time it is backfilled. Excess material shall be removed from the premises immediately. The Developer/Contractor will maintain the temporary gravel surface until the asphalt is placed.

Sub-section C. Preparation for Paving.

The area over trenches to be resurfaced shall be graded and rolled with a roller weighing not less than 12 tons, or with the rear wheels of a five-yard truck loaded to capacity, until the subgrade is firm and unyielding. Mud or other soft or spongy material shall be removed and the void filled with gravel and rolled and tamped thoroughly in layers not exceeding six inches in thickness. The edges of trenches, which are broken down during the making of subgrade, shall be removed and trimmed neatly before resurfacing.

Before any permanent resurfacing is placed, the Developer/Contractor shall trim the existing paving to clean straight lines as nearly parallel to the centerline of the trench as practicable. Said straight lines shall be thirty feet minimum lengths and no deviations from such lines shall be made except as specifically permitted by the Public Works Representative/ Engineer. If edge of final trench is located within 5' of the lip of the curb and gutter the entire asphalt between the trench and the curb and gutter shall be removed and replaced.

For Shallow excavation the existing bituminous paving shall be saw cut or roto-milled back a minimum of twenty four inches beyond the limits of any excavation or cave-in along the trench so that the edges of the new paving will rest on at least twenty-four inches (24") of undisturbed soil. For Deeper excavations the existing bituminous paving shall be saw cut or roto-milled back a minimum of thirty six inches beyond the limits of any excavation or cave-in along the trench so that the edges of the new paving will rest on at least thirty-six inches (36") of undisturbed soil.

Before any permanent resurfacing is placed, the exposed subgrade shall be proof rolled by the contractor/ developer with a fully loaded, tandom-axle dump truck or other approved equipment providing an equal subgrade loading. A representative from the city must be present for proof rolling. Unsuitable areas observed at time of proof rolling shall be improved by compaction or by sub-excavating to a depth approved by the Public Works Director/ Engineer and placement of fabric and granular borrow.

Sub-section D. Bituminous Prime Coat.

The bituminous prime coat shall consist of an application of hot bituminous material on a previously prepared base course or other surface to be paved. Prior to the application of the prime coat, an inspection of the area to be coated will be made by the Inspector to determine its fitness to receive the bituminous

priming material. That portion of the base course prepared for immediate treatment, if considered excessively dry, shall be lightly sprinkled with water immediately in advance of the application, to assure a uniform spread of the bituminous material.

Bituminous material used for the prime coat shall conform to the requirements for RC-250. Material shall be applied at a temperature of 175 degrees F to 225 degrees F at a rate of 0.3 to 0.4 gallons per square yard by use of a bituminous distributor.

Immediately following the preparation of the base course, the bituminous material shall be applied by means of a bituminous distributor at the temperature previously specified. The priming material shall be so applied that uniform distribution is obtained at all points of the surface to be primed.

Following the application of prime material, the surface shall be allowed to dry without being disturbed, or for such additional period of time as may be necessary to attain penetration into the base course and drying out or evaporation of the volatiles from prime material. The Contractor shall furnish and spread sufficient acceptable sand on all areas which show an excess of bituminous material to effectively blot up and cure the excess.

The primed surface shall be maintained by the Contractor until the succeeding layer of pavement has been placed. During this interval, the Contractor shall protect the primed surface against damage and shall repair all broken spots.

The bituminous distributor shall be so designed and equipped as to distribute the bituminous material uniformly at even heat on variable widths of surface at readily determined and controlled rate with pressure range of 25 to 75 pounds per square inch.

The prime coat shall be applied only when the base course is dry or contains moisture not in excess of that which will permit uniform distribution and the desired penetration. It shall not be applied when atmospheric temperature is below 50 degrees F.

Sub-section E. <u>Tack Coat.</u>
Before placing asphalt cement, an application of tack (Grade CSS-1h per APWA Standard Specification Section 32 12 14, TACK COAT.) MC-70 or MC-250 complying to AASHTO M-82, applied at a rate of 0.15 to 0.20 gallons/square yard.

Sub-section F. <u>Bituminous Surface.</u>

The bituminous surface over trenches shall be restored by standard paving practices to a minimum thickness of four inches (4"). Gradation of aggregate shall conform to the 3/4-inch gradation limits as defined in the Standard Specifications for Roadway Construction.

Sub-section G. <u>Concrete Surface Crossings.</u>

Driveways, Sidewalk or Curb and Gutter. Where a trench is located under private driveways, sidewalk or curb and gutter, the subgrade shall be prepared in the same manner as described for pavement, and the concrete driveway, sidewalk or curb and gutter shall be rebuilt according to the City's specifications on file in the Inspector's office, for the type of driveway, sidewalk or curb and gutter that was removed, or such other type as may have been ordered to replace it.

Repairing Damaged Pavement, Driveway, Sidewalk or Curb and Gutter. If any pavement, concrete driveway, sidewalk, or curb and gutter has been damaged outside the lines of the trench, while trenching, damaged areas shall be removed along straight lines and at right angles, and all cut surfaces shall be vertical, and removal and rebuilding of the damaged portion shall be done by the contractor at his own expense, and to the full satisfaction of the engineer.

Section 10.11 GRAVEL SURFACE:

Where trenches are excavated through gravel-surfaced areas such as roads and shoulders, parking areas, unpaved

driveways, etc., the gravel surface shall be restored and maintained as follows:

Sub-section A.

The gravel shall be placed deep enough to provide a minimum of six inches of material.

Sub-section B.

The gravel shall be placed in the trench at the time it is backfilled. The surface shall be maintained by blading, sprinkling, rolling, adding gravel, etc., to maintain a safe, uniform surface. Excess material shall be removed from the premises immediately.

Sub-section C.

Material for use on gravel surfaces shall be obtained from sound, tough, durable gravel or rock meeting the following requirements for gradation:

Passing 1-inch sieve	100%
Passing 1/2-inch sieve	79-91%
Passing No. 4 sieve	49-61%
Passing No. 16 sieve	27-35%
Passing No. 200 sieve	7-11%

Section 10.12 RESTORATION OF SURFACES:

Unless otherwise directed, all street surfacing, curbs, gutters, sidewalks, driveways, or other hard surface that must be removed in the performance of the work shall be restored in kind by the Developer/Contractor in accordance with the Specifications contained herein. Deviation of more than one-fourth inch (1/4") between old and new work or within new construction shall be corrected. Such measurement shall be made from a ten-foot (10') minimum length straight edge. Adjoining surfaces between old and new must be flush.

Minimum trench repair in asphalt surfaced roadways shall be 12 inches of compacted granular roadbase and 4 inches of plant mix asphalt or to match the existing whichever is greater.

Street repairs in the pavement during the warranty period of a new subdivision or other development must be completed prior to the placement of the slurry seal at the end of the warranty period. This includes repair of settled trenches or asphalt patching where curb and gutter has been removed and replaced. All work of this type must be inspected and approved by the City Engineer or his representative.

Section 10.13 PAVEMENT MARKINGS:

The Developer/Contractor shall be responsible for restoration of pavement markings on all roadways. Restoration of pavement markings shall conform to the applicable local and state specifications.

On roadways under UDOT jurisdiction temporary pavement markings shall be provided for any removed or obliterated markings. The temporary markings shall conform to UDOT standards and specifications. The Developer/ Contractor shall coordinate with UDOT for permanent markings.

Section 10.14 MISCELLANEOUS IMPROVEMENTS:

It shall be the Developer/Contractor's responsibility to restore to their original condition all irrigation canals, levees, culverts, gates, fences, drainage ditches, and all such improvements which are cut or disturbed during construction. Topsoil in farming areas or along road edges shall be stored separate from subsoil during pipe trench excavation. Topsoil shall be replaced during backfill operations as nearly as possible to its original condition, thereby assuring suitable soil for reseeding.

Section 10.15 LANDSCAPE RESTORATION:

Areas of new construction that cover or disturb existing landscaped areas with fills and cuts or areas disturbed by construction of retaining walls shall have the landscape restored. Areas that have lawn or flower beds shall be restored including sprinkling systems that might be damaged or relocated because of construction. Lawn covered or removed shall be replaced by sod. If existing landscape area is disturbed, the area should be restored to match the existing landscape. Agricultural fields that have been disturbed shall be re-vegetated to match the disturbed crop. Grass areas shall be restored at a maximum slope of 4:1 and drive way areas shall be restored a maximum slope of 8:1. Any relocation must be accepted by owner.

The topsoil shall be fertile, sandy loam topsoil, obtained from well-drained areas. It shall be without admixture of subsoil or slag and shall be free of stones, lumps, sticks, plants or their roots, toxic substances or other extraneous matter that may be harmful to plant growth and would interfere with future maintenance. Topsoil pH range shall be 5.3 to 6.0.

Section 10.16 CLEANUP:

At the completion of each area of work all equipment, barricades, and similar items shall be removed from the area. All excess material will be removed. Adjacent borrow pits and road shoulders used for storage of excavating materials will be smoothed and returned to its original contour.

DIVISION 11: ROADWAY CONSTRUCTION

Section 11.01 GENERAL:

This Division covers roadway construction. Work shall consist of pulverizing existing asphalt, earthwork, roadway excavation, 6-inch curb walls, 30-inch curb and gutter, 6-foot monolithic curb gutter and sidewalk, and drive approaches. It will also include imported granular borrow, curb face inlet boxes including connection to existing storm drain, subgrade preparation, untreated base course, asphalt surface and raising manholes and valve boxes to grade.

Section 11.02 PULVERIZING:

The Developer/Contractor shall pulverize the existing asphalt and roadbase to a depth of 6 to 8 inches. The limits of the area to be pulverized will be as shown on the improvement drawings. This material may be used for granular borrow or untreated roadbase. The Developer/Contractor has the option of methods he feels will result in the least work and best product in breaking up the existing asphalt, provided that the maximum size for a single piece of asphalt does not exceed 3-inches. Placing, grading and compacting of this material shall comply with the requirements of borrow or roadbase. The existing asphalt edges where the pulverizing terminates shall be saw cut following or prior to being pulverized.

Section 11.03 EARTHWORK:

The earthwork needed for roadway construction shall meet the requirements of Division 7, Earthwork.

Section 11.04 ROADWAY EXCAVATION:

Following completion of the curb and gutter improvements the roadway between lip of gutters shall be excavated to the lines and grades shown on the improvements drawings. Materials not suitable for use as granular borrow or roadbase shall be removed from the road section. Excavation may be done on one-half of the road at a time.

Section 11.05 SUBGRADE PREPARATION:

Sub-base as determined necessary upon analysis of soil characteristics and loads to be imposed on the pavement structure.

This work shall consist of the shaping and compacting of the subgrade in accordance with these specifications and in conformity with the lines, grades, and typical cross sections shown on the Drawings or as established by the Public Works Representative/Engineer.

Following roadway excavation the subgrade shall be proof rolled by running moderate-weight rubber tire-mounted construction equipment uniformly over the surface at least twice. During the rolling operation moisture content of the subgrade layer shall be maintained at not less than ~~97~~6% or more than 105% of the optimum moisture content. Rolling shall be continued until the entire roadbed is compacted to the specified density to a minimum depth of ~~8~~ 10 inches or greater as determined by soils report.

Section 11.06 GRANULAR BORROW:

Granular borrow (foundation or roadway) material shall consist of well graded granular bank run natural aggregate material with a maximum size of 3 inches and less than 15% passing a No. 200 sieve. The material shall meet the following gradation:

Sieve Size	Percent Passing
No. 10	50 max.
No. 40	30 max.
No. 200	15 max.

The granular borrow material shall be compacted to not less than 96~~5~~% maximum dry density as determined by AASHTO T-99. Granular foundation borrow shall be compacted to not less than 96~~5~~% of maximum dry density as determined by ASTM D-1557. Surfaces shall be true to the established grade with thickness being not less than 1/4-inch from the required layer thickness and with the surface elevation varying not more than 3/8-inch in ten feet from the true profile and cross section.

Section 11.07 GRANULAR BACKFILL BORROW:

Granular backfill borrow shall be free draining natural aggregate material meeting the following gradation:

Sieve Size	Percent Passing
1 - ½ inch	100
1 inch	95-100
½ inch	25-60
No. 4	0-10

Section 11.08 BASE COURSE:

Base for all streets shall consist of hard, durable particles or fragments of stone or gravel, screened or crushed to the required size and grading. The material shall be free from balls of clay, alkali, adobe or other deleterious matter, and shall conform to the following gradation when tested in accordance with AASHTO T-27 or ASTM C 136 and AASHTO T-11 or ASTM C 117.

Base Course Gradation	Percent Passing		
U.S. Sieve Size	1 ½" minus	1" minus	¾" minus
1 ½ inch	100	--	--
1 inch	--	100	--
¾ inch	81-91	--	100
½ inch	67-77	79-91	--
3/8 inch	--	--	78-92
No. 4 sieve (4.75 mm)	43-53	49-61	55-67
No. 16 sieve (1.20 mm)	23-29	27-35	28-38
No. 200 sieve (0.075 mm)	6-10	7-11	7-11

Slag 4133 (3/4 inch minus) and slag 4120 (3/4 inch minus) can be used.

The material shall be deposited and spread in a uniform layer at optimum moisture content, without segregation of size, with such depth that when compacted, the layer will have the required thickness as stated below.
Each layer shall be compacted for the full width and depth. Alternate blading and rolling will be required to provide a smooth, even and uniformly compacted course true to cross section and grade. Places inaccessible to rolling shall be compacted with mechanically operated hand tampers.

The gravel base shall be compacted to not less than 96~~5~~% maximum dry density as determined by AASHTO T-180. Surfaces shall be true to the established grade with thickness being not less than 1/4-inch from the required layer thickness and with the surface elevation varying not more than 3/8-inch in ten feet from the true profile and cross section.

Section 11.09 BITUMINOUS ASPHALT CEMENT PAVEMENT:

Asphalt cement shall conform to the requirements for asphalt cement, AR-2000, AASHTO M-266 (AR-40) or ASTM D 3381. Mixing temperature shall be not lower than 275 degrees F, nor higher than 325 degrees F.

Mineral aggregate shall consist of coarse aggregate of crushed stone or gravel composed of hard, durable particles, sand, and filler as specified in the following. The portion of the material retained on the No. 4 sieve shall be known

as coarse aggregate and that portion passing a No. 4 sieve shall be known as fine aggregate. The composite material shall be uniformly graded from coarse to fine and shall meet the requirements of the following gradation when tested in accordance with AASHTO T-27 or ASTM C 136. Asphalt concrete shall be as indicated on the Plans, but if not indicated shall be two course plant mix.

The surface course shall consist of a mixture of mineral aggregate and binder. Gradation of aggregate shall conform to the following ¾ inch design mix (APWA 32-12-05):

U.S. Sieve Size	Percent Passing
1/2 inch	90-100
3/8 inch	75-91
No. 4	46-62
No. 16	22-34
No. 50	11-23
No. 200	3-7

At least 70 percent by weight of each size of aggregate included in the coarse aggregate shall consist of particles which have at least one rough, angular surface produced by crushing.

Coarse aggregate shall have a percentage of wear of not more than 50 at 500 revolutions, as determined by AASHTO T-96 or ASTM C 131.

Plasticity index of the aggregate shall be not more than 2 as determined by AASHTO T-90 or ASTM D 431B.

Sand may be added to the crusher or pit run product to supply any deficiency in the 4-sieve size, and filler may be added to supply any deficiency in 200-sieve material. If the aggregate contains an excess of sand, wasting will be required.

Finely powdered lime stones, Portland cement, or other artificially or naturally powdered mineral dust, acceptable to the inspector, may be used for filler.

The Developer/Contractor shall establish a mix gradation, and the amount of bituminous material shall be subject to the approval of the Public Works Director/Engineer and shall meet the requirements of the gradation selected. Regardless of the bituminous content, there shall not be more than 3% voids in the aggregate.

The bituminous material for the surface course shall be AC-10 penetration asphalt cement conforming to the requirements of ASTM M20-60.

Section 11.10 ASPHALT PLACEMENT:

The methods employed in performing the work, all equipment, tools and machinery and other appliances used in handling the materials and executing the work shall be the responsibility of the contractor. The contractor shall make such changes in the methods employed and in the equipment used as are necessary whenever the bituminous mix being produced does not meet the specifications herein established.

Over the dry, dust-free compacted base course the Developer/Contractor shall place and compact a bituminous asphalt cement surface course. The bituminous asphalt cement surface course shall not be placed until the Public Works Director/Engineer has approved the underlying base course. The bituminous asphalt cement surface course shall be placed no less than 7 days following this approval. After 7 days the base course must be reinspected before the surface course is placed.

The bituminous surface course shall be mixed at a mixing plant and spread and compacted on the prepared base in conformance with the lines and dimensions shown on the Drawings and in accordance with these Specifications.

The bituminous mixtures shall be spread with self-propelled mechanical spreading and conditioning equipment capable of distributing at least a 12-foot width. The mixture shall be spread and struck off in such a manner that the

finished surface shall result in a uniform smooth surface. The longitudinal joints in succeeding courses shall be offset at least 6-inches transversely to avoid a vertical joint through more than one course.

The temperature of the bituminous mix shall be between 250 deg. F. and 350 deg. F. when placing.

After the mixture has been spread, the surface shall be rolled in longitudinal direction commencing at the outside edge or lower side and proceeding to the higher side. Each pass of the roller shall overlap the preceding pass at least one-half the width of the roller. Rolling shall continue until 96~~5~~% of the laboratory density as determined in accordance with ASTM Designation D-1559 for the bituminous mixture being used has been obtained. Density tests shall be done following the procedures of ASTM D-2950.

Rolling operations shall be conducted in such a manner that shoving or distortion will not develop beneath the roller.

The surface of the pavement, after compaction, shall be uniform and true to the established grade. When tested with a ten-foot straight edge placed on the surface of the pavement, at any point, the surface shall not deviate more than one-eighth of an inch from the lower edge of the straight edge. All high and low spots shall be remedied immediately by removing the wearing course material over the affected areas and replacing it with fresh, hot wearing course and surface finish material and immediately compacting it to conform with surrounding area.

It is the responsibility of the Developer/Contractor to control traffic. All traffic shall be kept off the completed surface until the pavement is fully cured as approved by the Public Works Representative/Engineer.

No bituminous surface course shall be placed when the temperature of the air or roadbed is 50 deg. F. or below, and falling, during rainy weather, when the base is wet, or during other unfavorable weather conditions as determined by the Public Works Representative/Engineer.

Section 11.11 ADJUSTING MANHOLES AND VALVE BOXES TO FINAL GRADE:

This section covers the requirements for adjusting manholes and valves to final grade. The adjustment shall be made with cast-iron ring inserts concrete grade rings or cast-in-place concrete collars. Cast-in-place concrete collars shall be constructed after the asphalt surface has been placed.

When concrete rings are used the concrete shall conform to the requirements of Division 8. Concrete shall be Class AA(AE). The concrete mix shall be one part cement to two parts sand or Kent Seal.

Manhole rings shall be set to the grade and slope of the road – shim and grout ring into place.

Manholes and valves placed in asphalt surfacing shall be set in a concrete collar. The collar shall be at least twelve inches (12”) thick and extend at least twelve inches (12”) from the cast iron ring or valve box. The concrete collar shall be constructed such that at the interface with the asphalt, the collar shall be one-half inch (1/2”) lower than the pavement. The cast iron ring or valve box shall be constructed such that it is one-half inch (1/2”) lower than the pavement.

Where manholes are to be raised this is be accomplished by removing the cover and frame and raising the manhole to proper elevation with concrete.

Rings and covers shall be protected during backfilling and compaction of the soil and during the placing or replacing of road surfaces. Any ring or cover loosened from the manhole section shall be reset in cement mortar and any ring or cover damaged or broken shall be replaced by the Developer/Developer/Contractor at its expense.

Section 11.12 ~~SLURRY SEAL COATS~~SURFACE TREATMENTS

The following are acceptable surface treatments which shall be installed within one year after construction of a road. Surface treatments are required to be in place prior to issuance of end of warranty.

Sub-section A. HIGH DENSITY MINERAL BOND SEAL

The high density mineral bond seal shall meet and be installed per specifications set forth in the 2012 American Public Works Association (APWA) Utah Chapter Manual of Standard Specifications Section 32 01 13.68 in its entirety. Deviations from this specification will not be accepted.

Sub-section B. CHIP SEAL

The chip seal shall meet and be installed per specifications set forth in the 2012 American Public Works Association (APWA) Utah Chapter Manual of Standard Specifications Section 32 01 13.64 in its entirety. Deviations from this specification will not be accepted. All chip seal must be fogged.

~~A slurry seal coat is required on roads after one-year of being constructed. Slurry Seal shall consist of a properly proportioned mixture of fine graded aggregate, mineral filler, emulsified asphalt and water mixed and evenly spread as a surface treatment. The cured slurry shall have a homogeneous appearance, fill all cracks, adhere firmly to the surface and have skid resistant texture.~~

~~Materials shall be per Section 405 of the Utah Department of Transportation Standard Specifications and as follows:~~

~~A. The emulsified asphalt shall meet the current specifications of the American Society of Testing and Materials (ASTM) for cationic emulsified asphalt grade CSS-1hr (ASTM-D-2397), grade SS-1hr for anionic emulsified asphalt (ASTM-D-977) or quick setting asphalt emulsion (QSH) or (CQS-1hr).~~

~~B. Aggregate: The mineral aggregate shall consist of natural or manufactured sand, slag, crushed fines or a combination thereof. Aggregate shall consist of sound, durable, crushed stone or crushed gravel and approved mineral filler. The material shall be free from vegetable matter and other deleterious substances. Aggregates shall be 100% crushed with no rounded particles, volcanic in origin and black in color. The aggregate blend shall have a sand equivalent of not less than forty-five (45). The mineral aggregate shall conform to the quality requirements of ASTM-D-1073.~~

~~C. Mineral Filler: Mineral filler shall be portland cement, hydrated lime or aluminum sulfate conforming to ASTM-D-242.~~

~~D. Type I slurry shall be used on trails and parking lots. Type II slurry shall be used on local roads. Type III slurry shall be used on collector and arterial roads.~~

~~E. The combined aggregate and mineral filler shall conform to the following gradation (from APWA Section 32-01-13):~~

~~AMOUNT PASSING SIEVE SIZE PERCENT PASSING BY WEIGHT~~

~~SIEVE SIZE~~	~~TYPE I~~	~~TYPE II~~	~~TYPE III~~
~~3/8"~~	~~--~~	~~100~~	~~100~~
~~No. 4~~	~~100~~	~~90-100~~	~~70-90~~
~~No. 8~~	~~90-100~~	~~65-90~~	~~45-70~~
~~No. 16~~	~~65-90~~	~~45-70~~	~~28-50~~
~~No. 30~~	~~40-65~~	~~30-50~~	~~19-34~~
~~No. 50~~	~~25-42~~	~~18-30~~	~~12-28~~
~~No. 100~~	~~15-30~~	~~10-21~~	~~7-18~~
~~No. 200~~	~~10-20~~	~~6-15~~	~~5-15~~

~~F. APPLICATION RATE~~

~~The aggregate spread shall be as follows:~~

~~Type I: 8 to 12 pounds per square yard~~

~~Type II: 12 to 16 pounds per square yard~~

~~Type III: 15 to 18 pounds per square yard~~

~~Any area found to be less than the indicated minimum pounds shall receive a second application at the contractors expense.~~

~~G. Water: All water used with the slurry mixture shall be potable and free from harmful soluble slats.~~

~~H. Selection of materials and rate or percentage of each in the slurry mix shall be in accordance with the following:~~

~~The contractor shall provide the Engineer with test results from an independent laboratory of materials he intends to use. The tests results shall conform to the requirements of ASTM D-3910-80a and shall be as follows:~~

~~1. Consistency Test~~	~~4.4.4~~
~~2. Set Time~~	~~4.4.5~~
~~3. Cure Time~~	~~4.4.6~~
~~4. Wet Track Abrasion Test~~	~~4.4.7~~

~~The contractor shall include the cost of the above tests in the unit bid price for Asphalt for Slurry Seal Coat. The stockpile shall be completely built before any slurry seal is started.~~

~~Engineer may take courtesy samples of the stockpile the first day and every five hundred (500) tons thereafter. If the Contractor elects to build more than one stockpile or conditions require more than one stockpile, each stockpile shall be tested and accepted prior to use. Any material that does not meet specifications shall be corrected or removed from the stockpile area. Corrected material will be retested for acceptance. The Contractor shall receive written acceptance of stockpiles from the Engineer prior to starting slurry work.~~

~~I. Equipment. The equipment shall be designed specifically for the blending, mixture and placing of "Slurry Seal" similar and/or equal to the #804 Young Continuous Mix Slurry Machine. The slurry machine shall have been calibrated in advance to ensure proper proportioning of the materials, and all equipment used in the performance of this work shall be maintained in satisfactory working order at all times.~~

~~Surface preparation, asphalt material application, cover material application, and surface rolling shall be in accordance with Section 405 of the Utah Department of Transportation Standard Specifications and as follows:~~

~~Preparation of Surfaces: Immediately prior to applying the slurry, unsatisfactory areas shall be repaired and the surface shall be cleaned of all oil spots, loose paint, silt spots, vegetation, and other loose and objectionable material. Any standard cleaning method may be used, except that water flushing will not be permitted in areas where considerable cracks are present in the pavement surface. Areas that have been subject to fuel or oil spillage shall be wire-brushed to remove any dirt accumulations. The area shall then be primed with shellac or a synthetic resin to prevent the sealcoat from debonding. The authorized representative of the owner shall give final approval that the surface has been prepared properly.~~

~~Application: The surface shall be pre-wetted by fogging ahead of the slurry box. Water shall be applied at a rate of 0.02 to 0.05 gals/yd². No free water shall be on the surface of the pavement in front of the slurry box. The slurry mixture shall be of the desired consistency upon deposit on the surface and no additional elements shall be added. A sufficient amount of slurry shall be carried in all parts of the spreader at all times so that a complete coverage is obtained. Overloading of the spreader shall be avoided. No lumping, balling or unmixed aggregate shall be permitted. No segregation of the emulsion and aggregate fines from the coarse shall be permitted. No excessive breaking of emulsion shall be allowed in the spreader box. No streaks, such as those caused by oversized aggregate will be left in the finished pavement.~~

~~Joints: Build up on longitudinal and traverse joints shall not be permitted. Slurry seal placed adjacent to concrete pavements or concrete curb and gutter shall be placed with a straight longitudinal edge and shall not overlap the concrete by more than two (2") inches. All edges shall be straight and neat in appearance.~~

~~Hand Work: Approved squeegees shall be used to spread slurry in non-accessible areas to slurry mixer. Care should be exercised not to leave an unsightly appearance from handwork.~~

~~Curing: Treated areas shall be allowed to cure until such time as the Public Works Director/Engineer permits opening to traffic.~~

~~Weather Limitations: No slurry shall be applied, a) when there is any danger that the unfinished product will freeze before it cures completely; b) when the pavement or air temperature is 50°F (10°C) or below and falling, but may be applied when both air and pavement temperature are 45°F (7°C) or above and~~

~~rising; or c) in the period following a rain while puddles of water remain on the surface to be coated. Slurries that cure by evaporation should not be laid during periods of abnormally high humidity, or when rain may fall within a few hours. Slurries that cure by chemical ejection of water may be laid without regard to existing humidity, even during periods of light rainfall.~~

~~Traffic Control: Suitable methods such as barricades, flagmen, pilot cars, etc., shall be used to protect the uncured slurry surface from all types of traffic. Any damage to the uncured slurry will be the responsibility of the contractor. Unless otherwise approved, all traffic control devices are to remain in place at least 24 hours.~~

Section 11.13 ASPHALT PAVING

All streets shall be surfaced in accordance with the following minimum standards, unless otherwise determined that a thicker section is required based upon a geotechnical evaluation or as specified by the City Engineer. The developer/contractor may be required to submit a pavement design for review on any street. If a pavement design is submitted, all design criteria must be specified, reviewed and approved by the City. Traffic volume, axle loadings and percent trucks may vary greatly from location to location.

Local Streets

A. 10-inch minimum crushed gravel base course over prepared subgrade.

B. 3-inch minimum compacted thickness plant mix asphalt surfacing on streets.

Collector Streets

A. 12-inch minimum crushed gravel base course over prepared subgrade.

B. 4-inch minimum compacted thickness plant mix asphalt surfacing on streets.

Arterial Streets

A. 12-inch minimum crushed gravel base course over prepared subgrade.

B. 6-inch minimum compacted thickness plant mix asphalt surfacing on streets.

Section 11.14 SUPERPAVE

Composition of performance grade asphalt - aggregate mix.

Sub-section A. DEFINITIONS:

A. Asphalt-Aggregate Designator: Alpha-numeric code that indicates nominal maximum size of aggregate, and type and grade of asphalt in aggregate-asphalt mix. For example; "*12.5 PG70-28*" means aggregate asphalt mix shall be composed of an aggregate gradation with a 12.5 mm nominal maximum size and a performance grade asphalt binder designed to perform between temperatures of 70 deg C. and –28 deg C.

B. ESAL (acronym for equivalent single axle load): Number used in designing Pavement thickness. It relates axle load of any mass and number to an equivalent number (18,000 lb).

C. Mean of Deviations: Defined in Section 32 11 23 of the 2007 Utah/APWA Specifications.

D. Nominal Maximum Size: One sieve size larger than first sieve size retaining more than 10 percent of the Sample. The nominal maximum size sieve will retain a minimum of 0 and a maximum of 10 percent of the sample. Maximum size is one sieve size larger than the nominal maximum size.

Sub-section B. SUBMITTALS:

A. Quality Assurance: Submit names, certification levels, and years of experience of testing agency's field technicians that are assigned to the Work. Verify laboratory complies with ASTM standards.

B. Mix Design: Submit.

1. Date of mix design. If older than 365 days, recertify mix design.
2. Paving asphalt source, type, and chemical composition.
3. Nominal maximum size of aggregate.
4. Temperature of mix at plant and in the field for optimum field compaction.
5. Paving asphalt target, dust to asphalt ratio, rut susceptibility, moisture sensitivity (tensile strength), voids in the mineral aggregate (VMA) and voids filled with asphalt (VFA).
6. RAP, mineral filler, antistrip, and recycle agent percentages.
7. Compaction at Nmax.

C. Pre-approved mix design, submit name and address of Supplier.

D. Before changing mix design, submit a new design and give ENGINEER 10 days to evaluate the changes.

E. Source Quality Control Inspections and Testing Report: If requested, submit report describing CONTRACTOR's and Supplier's quality control activities and test results.

Sub-section C. QUALITY ASSURANCE:

A. Use a laboratory that follows and complies with ASTM D 3666.

B. Do not change aggregate source or paving asphalt source without ENGINEER's written approval.

C. Do not use non-complying sources.

Sub-section D. ACCEPTANCE:

A. General:
- 1. Acceptance is based on one day's production.

B. Installation:

C. Materials:
- 1. At the Source:
  - a. Aggregate: Verify gradation prior to the drum mixer or after going through the drier.
  - b. Paving Asphalt:
  - c. Mix: 325 deg. F. maximum in transport vehicle.
- 2. At the Site:
  - a. Sampling: Two random samples. Location as follows:
    - 1) Behind paver before compaction, or
    - 2) Where sub-lot exhibits non-uniform appearance.
- 3. At the Laboratory:
  - a. Air Voids:
    - 1) Basis of evaluation is laboratory compacted samples (not field compacted samples).
    - 2) If test results are not within this Section's limits, options include correction of production procedures or alternate mix design acceptable to ENGINEER.
  - b. Dust to asphalt ratio.
  - c. Asphalt Content, Aggregate Gradation: A days production is acceptable if test deviations are within acceptable limits.

Sub-section E. PAVING ASPHALT:

A. Performance Grade Asphalt Binder (PGAB): Section 32 12 03 of the 2007 Utah/APWA Specifications.

1. Blending with polymers or natural asphalts is CONTRACTOR's choice.
2. Do not use acid blends without documentation supporting need.
3. As a rule of thumb, if the two numbers in an asphalt binder designation are added together and are greater than 90, then the binder will most likely contain a polymer or natural asphalt.

B. Recycle Asphalt: Section 32 12 03 of the 2007 Utah/APWA Specifications.

Sub-section F. <u>AGGREGATE:</u>

A. Material: Clean, hard, durable, angular, sound, consisting of crushed stone, crushed gravel, slag, sand, or combination.

B. Source: Use the following requirements to determine suitability of aggregate source and not for project control.

1. Coarse Aggregate:
   a. Angularity (fractured faces), ASTM D 5821: At least one fracture as follows.
      1) 55 percent minimum if ESALs are less than 0.3 million.
      2) 85 percent minimum if ESALs are more than 0.3 million.
   b. Hardness (toughness), ASTM C 131: Retained above 2.36 mm sieve.
      1) 40 percent maximum if ESALs are less than 0.3 million.
      2) 35 percent maximum if ESALs are more than 0.3 million.
   c. Flat and Elongated Particles, ASTM D 4791: 20 percent maximum retained above the 9.5 mm sieve has a 3:1 length to width ratio.
2. Fine Aggregate:
   a. Angularity, AASHTO T304: 45 percent minimum uncompacted void content.
   b. Friable Particles, ASTM C 142: 2 percent maximum by weight passing 4.75 mm sieve.
   c. Plasticity, ASTM D 4318: Aggregate passing 4.75 mm sieve is non-plastic even when filler material is added to the aggregate.
      1) Liquid limit: Less than 25.
      2) Plastic limit: Less than 6.

Sub-section G. <u>ADMIXTURES:</u>

A. Reclaimed Asphalt Pavement (RAP) Aggregate: Restrictions include.
1. 15 percent by weight maximum providing grading, VMA and VFA are met.
2. Greater than 15 percent requires separate mix design.

B. Mineral Filler: ASTM D 242.

C. Recycle Agent: ASTM D 4552.

D. Antistrip: Heat stable, cement slurry, or lime slurry.

Sub-section H. <u>MIX DESIGN:</u>

A. Selection of Materials:
1. Paving Asphalt. Section 32 12 03 of the 2007 Utah/APWA Specifications.
   a. PG70-28: Less than 3 million EASLs.
   b. PG70-28: 3 million to 30 million EASLs.
2. Aggregate: This Section Article 2.2.

B. Selection of Design Aggregate Structure.
1. Gradation: Maximum particle size is 1/4 compacted lift thickness.
   a. Target Gradation Curve must lie within one of the following Master Grading Bands. It must lie below the restricted zone in traffic class IV and traffic class V (Table 3 Section 32 12 05 of the 2007 Utah/APWA Specifications). In all other classes it may lie above, below, or pass through the zone.
   b. If acceptable to ENGINEER, use fractionated proportioning to select or adjust gradation.

Table 2 – Master Grading Bands	
Sieve Size	**Aggregate Grade**

(mm)				12.5	9.5
Control Sieves	37.5	100.0	-	-	-
	25	90-100	100.0	-	-
	19	<90	90-100	100	-
	12.5	-	<90	90-100	100
	9.5	-	-	<90	90-100
	4.75	-	-	-	<90
	2.36	19-45	23-49	28-58	32-6
	0.075	1-7	2-8	2-10	2-10
Restricted Zone	4.75	39.5	-	-	-
	2.36	29.8-30.8	34.6	39.1	47.2
	1.18	18.1-24.1	22.3-28.3	25.6-31.6	31.6-37.6
	0.6	13.6-17.6	16.7-20.7	19.1-23.1	23.5-27.5
	0.3	11.4	13.7	15.5	18.7

NOTES
(a) Gradation in percent passing by weight, ASTM D 4759.
(b) It is assumed fine and coarse aggregate have same bulk specific gravity.
(c) Percentage of fines passing 0.075 mm control sieve determined by washing per ASTM C 117.

2. Aggregate Blend:
   a. Dry-rodded Unit Weight, ASTM C 29: 75 pounds per cubic foot minimum.
   b. Weight Loss (soundness), ASTM C 88: 16 percent maximum using sodium sulfate.
   c. Clay Content (cleanliness), ASTM D 2419: Sand equivalent value after going through the dryer or prior to the drum mixer.
      1) 45 percent minimum if ESALs are less than 0.3 million.
      2) 60 percent minimum if ESALs are more than 0.3 million.
      The sand equivalent requirement is waived for the RAP aggregate but applies to the remainder of the aggregate blend.

C. Selection of Admixture:
   1. RAP: Adjust pavement asphalt grade to account for RAP binder viscosity.
   2. Cement or Hydrated Lime: Add if mix is moisture sensitive.

D. Selection of Mix Properties: Use AI SP-2 volumetric procedure.
   1. Compaction:

Table 4 – Compaction Parameters			
20 Year design ESALs (Million)	**Ninitial/ % of Gmm**	**Ndesign/ % of Gmm**	**Nmax/ % of Gmm**
Less than 0.3	6/ □□91.5	50 / 96	75 / □□98
0.3 to <3	7 / □□90.5	75 / 96	115 / □□98
3 to <30	8 / □□89	100 / 96	160 / □□98
30 or more	9 / □□89	125 / 98	205 / 98

NOTES
(a) N = Number of gyrations.
(b) Gmm = maximum specific gravity of mix, ASTM D 2041 (Rice method)
(c) Specific gravity of specimen: AASHTO T 312.
(d) 20 year design ESALs defined as follows.
□□Less than 0.3 = parking lots, light traffic, residential streets
□□0.3 to 3 = collector roads (most county roads)
□□3 to 90 = city streets, state routes
□□30 or more = interstate, weigh stations.

2. Voids in the mineral aggregate (VMA) at Ndesign:

Nominal Maximum Size	**Voids (VMA)**
37.5 mm	11 to 13 percent
25.0 mm	12 to 14 percent
19.0 mm	13 to 15 percent
12.5 mm	14 to 16 percent
9.5 mm	16 percent minimum

3. Voids filled with asphalt (VFA) at Ndesign:

20 Year Design ESALs (million)	**Voids Filled with Asphalt (VFA)**
Less than 0.3	70 – 80 percent
0.3 to <3	65 – 78 percent
3 to <30	65 – 75 percent
30 or more	65 – 75 percent

a. For 9.5 mm nominal maximum size mixtures, the specified VFA range is 73 percent to76 percent for design traffic levels 3 million ESALs or greater.
b. For 25.0 mm nominal maximum size mixtures, the specified lower limit of the VFA is 67 percent for design traffic levels less than 0.3 million ESALs.
c. For 37.5 mm nominal maximum size mixtures, the specified lower limit of the VFA is 64 percent for all design traffic levels.

4. Dust to Asphalt Ratio:

a. 0.6 to 1.2 if aggregate gradation passes through or over the restricted zone.
b. 0.8 to 1.6 if aggregate gradation passes under the restricted zone.

5. Moisture Sensitivity, ASTM D 4867: Tensile strength ratio less than 0.80 using freeze-thaw conditioning. Test specimen shall be 150 mm in diameter and 95 mm in height and compacted at 7 percent plus or minus 1 percent air voids.

6. Rut Susceptibility, AASHTO T 324: Maximum rut depth is 10 mm at 20,000 passes.

Sub-section I. <u>SOURCE QUALITY CONTROL:</u>

A. General: Collect Samples randomly, ASTM D 3665. Do not change sampling points.
   1. Aggregate sampling, ASTM D 75.
   2. Paving asphalt sampling, ASTM D 140.

B. Asphalt-aggregate mix sampling, ASTM D 979. Test for
   1. Air voids, ASTM D 3203.
   2. Paving asphalt content, ASTM D 6307.
   3. Aggregate gradation, ASTM D 5444.
   4. Tensile strength of bitumen-aggregate mixtures, ASTM D 4867.

C. Mixing Plant: ASTM D 3515.

DIVISION 12: CONCRETE SIDEWALK, CURB AND GUTTER

Section 12.01 GENERAL:

This section covers installation of curb and gutter; sidewalk; combination of curb, gutter and sidewalk; cross drain waterway; drive approaches; handicap ramps; and curb returns. All improvements shall be constructed to the dimensions and thickness shown on the Standard Drawings.

Section 12.02 CONCRETE:

Concrete shall be Class AA(AE) and shall meet all of the requirements of Division 8, Portland Cement Concrete. Under no condition shall the water cement ratio exceed 0.44 by weight. The concrete used for the construction of reinforced concrete drain gutter and concrete curb and gutter shall be air entrained using type II cement and shall be as outlined in Division 8.

The concrete materials and the proportioning, mixing, transporting, placing, protection and curing of the same shall conform to all the applicable requirements of Division 8 of these specifications. Vibration will not be required.

Section 12.03 EXPANSION JOINT MATERIAL

Material for 1/2-inch expansion joints shall be as specified in AASHTO M-153 and AASHTO M-213, and shall be installed with its top approximately 1/4-inch below the concrete surface.

Section 12.04 GRADE:

After construction, gutters shall be checked by flowing water. The Public Works Representative/Public Works Director/Engineer shall be present during the flow test. Removing concrete and replacing to the correct grade shall repair any high spots or depressions (which exceed 0.02 feet). (Minimum flow line grade shall be 0.50 percent.)

Resetting Frames and Covers, etc. Where there are structures existing, within the area of the sidewalk being constructed, such as valve boxes, meter boxes, hydrant boxes, sewer manholes, etc., that require resetting of frames and covers, or the building up or cutting down of the structure to fit the grade of the sidewalk, this work shall be done by and at the expense of the contractor unless otherwise provided in these specifications. Work shall be done to the satisfaction of the engineer.

Section 12.05 EXCAVATION:

Sidewalks: All excavation required for concrete sidewalks and preparation of subgrade shall be made as provided in these specifications and shall include all applicable provisions therein contained. If the sidewalk under construction does not cover the entire area between the curb and the property line, then after the forms have been removed, the depressions along the edges of the sidewalk pavement shall be backfilled with approved material, properly moistened and hand tamped to the satisfaction of the Inspector, and the areas between the sidewalk and the curb and between the sidewalk and the property line shall be finished to a uniform slope, as shown on the plans, with fine material, free from stones and large lumps, and then neatly surfaced with hand rakes. Where the excavation extends into lawns, the sod shall be taken up, carefully preserved and re-laid by the contractor.

Curb and Gutter: Preparation of Subgrade, Base and Backfilling. All excavation and preparation of subgrade and base required for construction of concrete curb and gutter and reinforced concrete shall be as outlined in Division 8 of these specifications, as determined by the engineer. Embankment required under the concrete shall be with approved material compacted to 96% of maximum density. Base material will be required as outlined in Division 11.

All excess material excavated by the Developer/Developer/Contractor shall be removed from the site. Removal of the excavated material shall be done before or immediately after the concrete is placed. The Developer/Contractor shall maintain adequate barricades and other devices to protect the public until excavated material is removed.

Section 12.06 FORMS:

All forms shall be steel, except at curves with a radius smaller than 200 feet. They shall be of a size to match the sections shown on the Drawings. Forms shall be held firmly in place with stakes or other approved means and shall be true to line and grade. The width of the form shall be equal to the full depth of the concrete and the upper edge shall be set accurately to the required elevation of the finished surface.

All forms shall be clean and coated with a light oil to prevent the concrete from adhering to them. Clamps, spreaders and braces shall be used where required to insure rigidity in the forms.

Forms shall not vary from vertical grade by more than 0.02 feet and from horizontal alignment by more than 0.05 feet. All forms shall have smooth even lines in both the horizontal and vertical plane.

Forms for curved sections shall be so constructed and placed that the finish surface of walls and edge of sidewalks, curbs and gutters will not deviate from the arc of the curve.

Section 12.07 SUBGRADE PREPARATION:

After having excavated the area, it shall be compacted immediately in advance of placing the base material and shall be maintained in a suitable condition until the base has been placed.

The developer/Developer/Contractor shall grade to the line and grade approved by the City. No concrete shall be placed without approved cut sheets. The sub-grade shall be properly shaped to conform to the cross section shown on the Standard Drawings, graded and compacted. Compaction shall meet the requirements of Division 7 Earthwork.

Placement of concrete on unsuitable materials shall not be permitted. The subgrade surface shall have a road base foundation as shown on the Standard Drawings. Immediately prior to the placing of concrete, the subgrade shall be compacted using a mechanical foot compactor, with compaction being at least ninety-six percent (96%) density.

Section 12.08 BASE COURSE:

Base Course. The base course shall be composed of natural gravel or crushed gavel placed on the prepared subgrade. The gradation of the aggregate shall be as follows:

	%Passing
U.S. Sieve Size	Gradation Band
1 inch	100
1/2 inch	70-100
No. 8	40-70
No. 16	20-40
No. 50	10-27
No. 200	4-13

The base course shall be placed to a minimum depth as indicated on the Standard Drawings and shall be compacted to 96% of maximum laboratory density as determined by AASHO T-180 Method D. Compaction shall be to the satisfaction of the City Inspector.

Section 12.09 CONSTRUCTION OF CURB AND GUTTER:

Placing, Compacting and Curing. The method of mixing, placing, compacting, finishing and curing, etc., of the concrete shall conform to all applicable requirements of Division 8 of these specifications.

Concrete curb and gutter shall be constructed in conformity with the lines, grades, slopes, form and dimensions shown on the plans or as designated by the engineer. In the construction of combined curb and gutter, the entire structure will be built simultaneously and no joint or line of cleavage shall be made between the curb and the gutter. The curb and gutter shall be constructed monolithically

After concrete has been placed in curb and gutter forms, it shall be consolidated so as to insure a thorough mixture, eliminate air pockets, and create uniform, smooth sides. As the concrete takes its initial set the forms shall be removed and all exposed surfaces shall be float finished, edged and broomed lightly. The curb and gutter shall be constructed to the dimensions shown in the Standard Drawings.

The top and face of the curb and also the top of the apron on combination curb and gutter must be finished true to line and grade and without any noticeable irregularities of surface. No portion of the surface or face of the curb and gutter shall vary more than ¼ inch from a straight edge ten feet in length, placed on the curb parallel to the street center line nor shall any part of the exposed surface present a wavy appearance.

Curb and gutter may be placed by an approved slip form method. The slip form machine equipment shall spread, consolidate, screen and float finish the freshly placed concrete in such a manner that a minimum of hand float finishing will be required to provide a dense and homogeneous concrete section. The concrete shall be distributed uniformly into final position by the machine without delay and competently placed true to line and grade.

Curb and Gutter Contraction Joints. At intervals of ten (10) feet, joints shall be made by inserting 1 ½ inches deep from plates one-eighth (1/8) inch in thickness and shaped to the exact form and dimensions of the curb and gutter. Plates must be smooth and clean. They shall be oiled with mineral oil immediately before using. Any plate that has become warped or damaged shall not be used. They shall be carefully removed as the concrete takes initial set, and any concrete broken out shall be repaired to the satisfaction of the City. The edges of such joints shall be tooled with an edger so as to provide a neat workmanlike appearance.

Expansion joints 1/2-inch thick shall be provided at approximately 50-foot intervals. The expansion joint filler shall be shaped to the exact form and dimensions of the curb and gutter, shall be 1/2-inch in thickness, and shall conform to A.S.T.M. Designation D544-52T, or as last revised, and as approved by the engineer. In cul-de-sac locations expansion joint material shall be provided at start and finish of radius and at intervals not exceeding 30 feet. A full plate must be used at expansion joints and ends of the constructed section, such as at driveways, curved sections and/or where determined by the engineer.

Joint Sealer shall be applied after division plates have been removed and expansion joints have been properly set. All joints shall be sealed in a manner and with material approved by the engineer.

Section 12.10 CONSTRUCTION OF COMBINED CURB WALK COMBO

Concrete curb, gutter and sidewalk may be constructed by first constructing the curb and gutter and then constructing the sidewalk behind it. If this method is used the joint between the back of curb and front edge of sidewalk shall be sealed. The curb and gutter may be placed using stationary forms or the slip method of forming.

Concrete curb, gutter and sidewalk may be constructed at the same time for combination curb, gutter and sidewalk. Stationary forms can be used to place combination curb, gutter and sidewalk or the slip form method can be used if it can be demonstrated that the tolerances specified herein can be met.

Joints in the sidewalk, when placed separately and adjacent to the curb, shall match the contraction and expansion joints in the curb and gutter as well as where the sidewalk abuts a solid object.

Section 12.11 CONSTRUCTION OF SIDEWALK:

All concrete sidewalks shall be constructed to the lines, grades and dimensions as shown on the prepared plans, or as directed otherwise by the engineer. All concrete sidewalks shall be installed by the developer prior to the final warranty inspection. It shall be built ~~four~~ six (~~4~~6) inches thick unless a site plan is provided. ~~except at and through driveways.~~ If a site plan is provided, sidewalk shall be four (4) inches thick and ~~Concrete~~ sidewalk ~~built at and~~ through resident driveways ~~that are used generally for passenger car traffic~~ shall be six (6) inches in thick~~ness~~ through the entire width of driveway. If driveway locations are not known at time of placement than entire lot width shall be placed at minimum thickness of 6 inches. At driveways, other than resident driveways, such as service stations and at all driveways used for commercial and industrial traffic, the thickness of the sidewalk through the entire driveway shall be as shown on the drawing, or as determined by the engineer; but in no case shall the thickness of the concrete walk be less than seven (7) inches.

The concrete shall be placed on the subgrade, prepared as above described, to the full depth of the sidewalk, as shown on the plans, in one course. The full quantity of concrete required shall be deposited in as near its final position as practical in one operation, and the placing shall be completed with shovels. Spades shall be used along the edges to bring the concrete into uniform and complete contact with the forms. Hand tampers approved by the engineer shall be used for compacting. A heavy iron shod straight edge shall be used for striking off the concrete at the proper elevation. Wood floats shall be used for bringing the material to a uniform surface and after the surface has partially set, all edges shall be finished with an approved edging tool having a three-eighths inch radius, and the surface shall then be finished with a wood float or by floating with a steel trowel as directed by the inspector. On steep grades the surface shall be roughened with a light broom finish as directed by the inspector. In no case shall dry cement or a mixture of dry cement and sand be sprinkled on the surface to absorb moisture or hasten hardening.

Sidewalk Expansion Joints. Transverse expansion joints shall be constructed in all concrete sidewalks at intervals of approximately thirty two (32) feet. These joints shall be one-half (1/2) of an inch in thickness and shall run the full width and depth of the sidewalk pavement. Expansion joints shall also be constructed between the sidewalk and curb, between the sidewalk and buildings abutting said sidewalk, around all poles, hydrants, manhole frames and/or other structures coming within or immediately adjacent to the sidewalk area, and at such other points as shown on the plan or as directed by the engineer. The width of expansion joint at the above mentioned locations shall be as shown on the drawing, or as directed by the engineer, except that the expansion joint abutting curb shall be a special joint one (1) inch wide by eight (8) inches deep. All expansion joints shall extend the full depth of the sidewalk pavement being constructed and shall be constructed at right angles to the center line and surface of the sidewalk pavement. A metal holder shall be used to hold the expansion joint rigidly and securely in place during the sidewalk construction.

Sidewalk expansion joint filler to be used shall be prepared resilient, non-extruding joint filler conforming to the requirements of A.S.T.M. specifications, designation D544-52 T, or as last revised, and as approved by the engineer, cut or molded to proper dimensions, and it shall be so placed in relation to surface of sidewalk pavement to allow for pouring of joint sealer compound.

Sidewalk Contraction Joints: In addition to the expansion joint all concrete sidewalks shall be marked transversely with a marking tool, at intervals equal to the width of the sidewalk being built. Each contraction joint shall be finished with an edging tool and shall be cut to a depth of one-quarter (1/4) of the sidewalk slab thickness and an approximate width of 3/16 inch. Additional contraction joints shall be provided as and where shown on the drawing or as directed by the engineer. Ordinary markings shall not be more than one-quarter inch in depth. Saw cuts for control joint purposes shall be strictly prohibited.

Section 12.12 CONCRETE CURB WALL:

Concrete curb wall shall be Class AA(AE) and shall meet all of the requirements of Division 8, Portland Cement Concrete. The curb walls shall be constructed to the dimensions and grades shown on the Standard Drawings or improvement drawings or as determined by the Public Works Representative/Engineer. Reinforcing steel shall meet the requirements of Division 9, Reinforcing Steel. Excavation for and backfill around the curb walls shall meet all the requirements of Division 7, Earthwork.

Section 12.13 CONCRETE CROSS DRAIN WATERWAY:

Concrete cross drain waterways shall only be used when directed by the City Engineer. Concrete cross drain waterway shall be reinforced and constructed in conformity with the lines, grades, slopes, form and dimensions shown on the Standard Drawings. The concrete used shall be the same as described in Division 8. The methods of placing, spading, compacting, finishing and curing, as indicated with curb and gutter shall apply to the construction of the concrete cross drain waterway. Base must be placed under the concrete cross drain waterway as indicated on the Standard Drawings.

Section 12.14 6-INCH CONCRETE DRIVE APPROACH:

The concrete to be used for the drive approach shall be Class AA(AE) and shall meet the requirements of Division 8, Portland Cement Concrete.

When the location of a residential driveway is known, it shall be a minimum of six (6) inches thick. On commercial sites the drive approach shall be a minimum of six (6) inches thick. They shall be constructed to the dimensions shown on the Standard Drawings. The concrete shall be finished as described above for sidewalks.

The driveways shall have a compacted 8-inch untreated base course under them.

Section 12.15 CURB RAMPS:

This section sets guidelines for accessibility to places of public accommodation and commercial facilities by individuals with disabilities. These guidelines are to be applied during the design, construction, and alteration of street construction or public buildings. The construction of curb ramps and drive approaches shall conform to the most recent American Disabilities Accessibility Standards as indicated in the Standard Drawings.

Sub-section A. Curb Ramp Location:

Curb ramps shall be provided wherever an accessible route crosses a curb.

Sub-section B. Curb Ramp Slope:

Slope of curb ramps shall be the least possible slope. The maximum slope of a ramp in new construction shall be 1:12. The maximum rise for any run shall be thirty (30) inches. Transitions from ramps to walks, gutters, or streets shall be flush and free of abrupt changes. Maximum slopes of adjoining gutters, road surface immediately adjacent to the curb ramp, or accessible route shall not exceed 1:20.

Sub-section C. Curb Ramp Width:

The minimum width of a curb ramp shall ~~be forty-eight (48") inches, exclusive of flared sides~~meet current ADA Standards.

Formatted: Indent: Left: 0.5"

Sub-section D. Curb Ramp Surface:

Surface of curb ramps shall be stable, firm, and slip resistant.

Sub-section E. Sides of Curb Ramps:

If a curb ramp is located where pedestrians must walk across the ramp, or where it is not protected by hand rails or guardrails, it shall have flared sides: the maximum slope of the flare shall be 1:12 (see Standard Drawings). Curb ramps with returned curbs may be used where pedestrians would not normally walk across the ramp.

Sub-section E. Built up Curb Ramps:

Built-up curb ramps shall be located so that they do not project into vehicular traffic lanes.

Sub-section G. Obstructions:

Curb ramps shall be located or protected to prevent their obstruction by parked vehicles.

Sub-section H. Location of Marked Crossings:

Curb ramps at marked crossings shall be wholly contained within the markings, excluding any flared sides.

Sub-section I. Diagonal Curb Ramps:

If diagonal (or corner type) curb ramps have returned curbs or other well defined edges, such edges shall be parallel to the direction of pedestrian flow. The bottom of diagonal curb ramps shall have a forty-eight (48) inch minimum clear space. If diagonal curb ramps are provided at marked crossings, the forty-eight (48) inch clear space shall be within the markings. If diagonal curb ramps have flared sides, they shall also have

at least a twenty-four (24) inch long segment of straight curb located on each side of the curb ramp and within the marked crossing.

Sub-section J. Islands:

Any raised islands in crossing shall be cut through level with the street or have curb ramps at both sides and a level area at least forty-eight (48) inches long between the curb ramp in the part of the island intersected by the crossing.

Section 12.16 EXCESS CONCRETE:

Wasted Concrete. Retempering concrete that has partly set will not be permitted. Concrete that for any reason has been mixed too wet shall be wasted. Concrete that is partly set shall not be used in the work. Waste concrete shall be disposed of by the contractor in approved washout containment areas .

Section 12.17 CONCRETE FINISHING:

All concrete surfaces not coming in direct contact with the forms shall be struck off with a straight edge to the exact form and elevation required. The surface shall then be finished with a wood float or steel trowel as shown on the plans or as ordered by the inspector, and the edges shall be finished with an approved edging tool.

If any special type of finish is required on any of the concrete included in this section, it shall be indicated on the plans or directed by the city.

Section 12.18 CONCRETE CURING:

All Portland Cement concrete shall be cured by acceptable means and approved by the engineer. The work shall be done in an efficient and systematic manner. The curing period shall not be less than seven (7) days.

Section 12.19 CONCRETE PLACEMENT IN HOTOR COLD WEATHER:
Refer to Division 8: Portland Cement Concrete

Section 12.20 DISCONTINUOUS POUR

If, for any reason, work is discontinued for a period long enough for the concrete to become set or partially set, then a construction joint shall be provided, preferably at a transverse expansion joint, or if that is impracticable, then at a transverse contraction joint. A bulkhead shall be placed between and at right angles to the side forms and at right angles to the surface of the pavement. It shall extend through the full depth of the pavement and the upper edge shall be set flush with the upper edge of the forms. The concrete shall be finished against this bulkhead to the full depth of the pavement and any excess concrete shall be wasted, and all work shall be done to the satisfaction of the inspector before work is stopped.

Section 12.21 CONCRETE PROTECTION AND REPLACEMENT

The contractor shall protect all curb and gutter and drain gutter from damage from traffic and all other causes until accepted by the City. Should the curb and gutter or drain gutter become damaged by weather, traffic, or during the rolling of the street, or from any other cause, it shall be repaired by reconstructing an entire section, by and at the expense of the Contractor and to the satisfaction of the inspector.

Replacement of damaged concrete-- all sidewalks that are broken, cracked, spaulding, or settled shall be replaced prior to any occupancy of structure, and for warranty completion. All replacement shall be done in accordance to new standard installation. Sidewalks placed inconsistent to approved plans shall be replaced unless written approval has been obtained for circumstances allowed by the City Engineer.

Curb replacement. All curb that has settled or broken shall be removed to the next joint and #4 bar drilled a minimum of 6” into existing curb placing a minimum of 3 bars with two in bottom and one in the back. All rebar shall be glued with approved glue for concrete and shall be completed to the satisfaction of the inspector.

Repair of defaced curb- curbs shall be repaired using approved bonding agent and non-shrink grout. Repairs only allowed for chips in curb less than 25% curb depth all others shall require replacement and finished to the satisfaction of the inspector.

DIVISION 13: STORM DRAINS

Section 13.01 GENERAL:

This section covers installation of storm drainpipe, manholes, and curb face inlet boxes. All improvements shall be constructed to the dimension and thickness shown on the Standard Drawings. The minimum storm drain main diameter shall be fifteen (15)-inches.

Section 13.02 STORM DRAIN CALCULATIONS:

Storm drain calculations will be produced using the rational method using a Farmer Fletcher Storm Distribution. Storm drain design shall follow the 0.2 cfs discharge allowable by Davis County and shall be sized for a 10 year storm without detention~~, a 50 year storm with minor detention,~~ and a 100 year storm with major detention.

Hydraulic calculations shall be submitted which produce the Composite "C".

Submit copies of the storm intensity/frequency.

Section 13.03 PIPE INSTALLATION:

Installation of pipe shall be in an open trench unless otherwise shown. Trench and backfill shall meet the requirements of Division 2, Trench Excavation and Backfill.

Section 13.04 PIPE:

Pipe and pipe laying shall meet the requirements of Division 4, Concrete Pipe, Division 4A, PVC Plastic Pipe, Division 4B, Polyethylene Corrugated Pipe. Pipe shall be laid with the bells up grade.

All pipe required for the Storm Sewer shall be standard strength, tongue and groove, reinforced concrete culvert pipe. All culvert pipe shall conform to the American Society for Testing Materials Specifications for Reinforced Concrete Culvert Pipe, latest designation D-76, or as provided in the special provisions.

Pipe diameters listed in the bid schedule for which no reinforcing requirements have been determined under ASTM Specifications shall be reinforced as required for the next diameter larger.

Culvert Pipe from 10" in diameter to 36" in diameter shall be at least 36" long. Pipe over 36" in diameter shall be at least as long at the inside diameter.

Section 13.05 STRUCTURES:

(a) All items listed in the bidding schedule as cleanout boxes, inlet boxes and junction boxes shall be designated as structures.

(B) Concrete for all structures shall be as outlined in Division 8.

(c) Upon removal of the forms, all the tie wire holding the forms shall be cut flush with concrete face and any rough or irregular surfaces found to exist shall immediately be repaired to the satisfaction of the Engineer. Surface not exposed to view need not be finished, unless otherwise shown on the plans. Unless otherwise shown on the plans, exposed surfaces of structures shall be finished to conform to the finish of the adjacent concrete. Surfaces over which asphalt paving is to be placed shall be rodded off to the neat lines. Surfaces exposed in concrete paving shall be given a float finish and surfaces exposed in curb and gutter areas shall be finished as prescribed for curb and gutter. An edging tool shall be used on all exposed corners to properly shape and finish the concrete.

Section 13.06 MANHOLES:

Manholes shall meet the requirements of Division 5, Manholes. Where the size of the storm drain does not permit use of manholes, precast or cast-in-place reinforced concrete boxes shall be used. Concrete used in precast or cast-in-place boxes shall be Class AA(AE).

Section 13.07 CONCRETE:

Concrete shall meet the requirements of Division 8, Portland Cement Concrete.

Section 13.08 REINFORCING STEEL:

Reinforcing steel shall meet the requirements of Division 9, Reinforcing Steel.

Section 13.09 STORM DRAIN INLET BOXES:

The concrete to be used for the storm drain inlet boxes shall be Class AA(AE). The boxes shall be built to the dimensions and reinforced as shown on the Standard Drawings. The boxes may be precast or cast-in-place.

Excavation and backfill of the boxes shall meet the requirements of Division 7, Earthwork.

The storm drain inlet grate and frame shall be a D & L Supply I-3517 single unit with curb box with type "V" grate or equal. Grates and frames are to be dipped in cold tar epoxy following fabrication. Grates are to be bicycle safe type grates. All inlets shall be marked "Drains to Stream" Inlet grates where an open face curb will not be used, a D&L supply I-1803 shall be used.

Section 13.10 PIPE CONNECTING INLET BOXES TO EXISTING STORM DRAINS:

The pipe to be used for connecting a new inlet box to an existing storm drain shall be of the same type of pipe as the existing pipe to which it is being connected. Where possible such connections shall be made by installation of a manhole. The Public Works Director/Engineer shall approve connection locations and methods.

Connections to concrete pipe shall be by coring a hole in the pipe and then grouting the connecting pipe to the concrete pipe. Connections to PVC or HDPE pipe shall be as per manufacture's recommendations. These recommendations will be reviewed with the Public Works Director/Engineer prior to construction.

Section 13.11 STORM DRAIN LATERALS:

Where storm drain laterals are required to drain commercial sites, the minimum diameter shall be 8 inch. A two-inch (2") by four-inch (4") by six-foot (6') marker, with the top twelve-inches (12") painted yellow, shall be installed to clearly mark the end of each lateral line

Section 13.12 WATERWAYS:

a) Description. Waterways shall include the construction of box culverts and flumes, the finishing and placing of concrete and metal pipe culverts and other type of culverts specified, in street sections, or in ditches paralleling streets, the construction of cleanout boxes and the furnishing and placing of cleanout frames and covers, and the construction of head gates and diversion works and all other work incidental thereto, in accordance with the plans and these specifications.

(b) Concrete Box Culverts, Flumes and Cleanout Boxes, etc. Concrete waterways shall be constructed from concrete, to the dimensions and at the locations shown on the plans, or according to the stakes set by the Engineer. The provisions of Division 8 under the heading of "Portland Cement Concrete" shall apply to the construction of waterways. Concrete waterways shall be reinforced as shown on the plans.

(c) Reinforced Concrete Pipe. Reinforced concrete pipe shall meet the requirements of "Standard Specifications for Reinforced Concrete Culvert Pipe ASTM Designation C76. (Latest ASTM Designation C76.)

(d) Non-reinforced Concrete Pipe. Shall not be used.

(e) Corrugated Metal Pipe (CMP). Corrugated metal pipe in quality and sizing shall be in

compliance with the regulations and design criteria in Handbook of Steel Drainage and Highway Construction Products, published by American Iron and Steel Inst., or as specified on an approved set of plans and shall meet the requirements of AASHO specifications M-36 as approved by Public Works Representative/Engineer.

(f) Placing and Covering. Pipe shall be placed at the locations shown on the plans or as directed by the Engineer and shall be laid true to line and grade. The width of the trench in which the pipe is laid shall be sufficient to permit thorough tamping under the haunches of the pipe. The pipe shall be bedded in an earth foundation of uniform density, and carefully shaped to the proper grade. Where rock or boulders are encountered in the formation it shall be removed and replaced with granular material to a sufficient depth to provide a uniform cushion under the pipe.

Section 13.13 Detention Facilities:

Detention facilities shall meter water at 0.2 cfs per acre. Detention facilities shall be designed as follows:

(a) Side slopes shall be 3:1 maximum.
(b) Designed for 100-year storm or as determined by City Engineer.
(c) Vehicular maintenance access around the entire basin (minimum 10 foot width).
(d) Vehicular access to basin.
(e) Where possible, lot shall provide normal frontage requirements.
(f) Pressurized irrigation system and landscaping compatible with the surrounding area.
(g) Flow through design that eliminates a “wet basin”.
(h) Cross slope within basin shall provide adequate drainage.
(i) Inlet and outlet boxes shall be grated, with extended swale construction extending from outlet structure into the basin to eliminate nuisance flows and water accumulation.
(j) Where possible, detention basins shall be planned as regional basins and incorporated into useable park property or open space.

DIVISION 14: SANITARY SEWER / LAND DRAIN

Section 14.01 GENERAL:

This Division shall include the installation of sanitary sewer and land drain collection facilities. References made herein specifically to sewer shall also refer to land drain unless otherwise specified. All sewer and land drain shall be polyvinylchloride unless directed otherwise by the City Engineer. The minimum sewer and land drain main diameter shall be eight (8)-inches.

Section 14.02 CONCRETE SEWER PIPE:

(a) Description. Sanitary sewers shall include the performance of all operations necessary to lay sewer pipe mains, wye branches, individual sewer mains to manholes, test mains for leaks and all incidental work necessary to complete the work in a satisfactory manner.

(b) Sewer Pipe. All pipe for the sanitary sewer mains shall be bell and spigot. The type of pipe the Contractor proposes to install shall have the approval of the City Engineer before work is commenced. No interchanging of type of pipe will be allowed. Pipe shall be rated for sewer and drain use and shall be green for identification.

(c) Non-Reinforced Concrete Sewer Pipe. Non-Reinforced concrete sewer pipe shall conform to Concrete Sewer Pipe ASTM Designation C 14-56.

(d) Reinforced Concrete Sewer Pipe. Reinforced concrete sewer pipe shall conform to the requirements for "Reinforced Concrete Sewer Pipe: ASTM Designation C 75556. Cement used in the pipe shall conform to Type 11A, (the air entraining agent shall be inter-ground at the mill), low alkali cement, conforming to Federal Specifications, 192a, of ASTM Designation C-15C-53.

(e) Length of Pipe. Pipe 36" in diameter and under shall be at least 36" long except specials. Pipe over 36" in diameter shall be at least as long as the inside diameter. The maximum length of pipe shall be 24 feet.

(f) Testing. Random samples of pipe and all fittings and specials such as short radius bands, wyes and toes shall be tested as specified for the type of pipe being used.

(g) Laying. No pipe shall be laid under any circumstances until the pipe has been tested, and the samples selected have satisfactorily passed the requirements. All pipe shall be laid up-grade from structure, unless otherwise expressly permitted by the Engineer, with the bell end of the pipe upgrade. All pipe shall be laid true to line and grade, with a uniform bearing under the full length of the barrel of the pipe, and suitable excavation shall be made to receive the bell of the pipe. All adjustments to grade shall be made by scraping away or tamping earth under the pipe. Wedging or blocking under the hub will not be permitted. As each unit of pipe is laid a sufficient amount of selected backfill materials shall be carefully placed and thoroughly tamped about the lower portion of the pipe to hold it firmly in position, with a minimum bedding material of 3 inches of approved gravel or rock. If adjustment of the position of a length of pipe is required after it has been laid, it shall be removed and rejoined as for a new pipe. When laying is not in progress the ends of the pipe lines shall be kept closed to prevent the entrance of foreign material.

(h) Rubber Gasket Joints. Pipe for rubber gasket joints shall be of the bell and spigot type, detail of the type the Contractor proposes to use shall be furnished and must have the approval of the City engineer before the work is to be commenced. The joint shall be so designed as to provide for self-centering and when assembled, to compress the gasket to form a water tight seal. The pipe design and gasket shall be such that movement of the pipe or hydrostatic pressure cannot displace the gasket. In order to assure water-tightness the clearance between the inner surface of the bell and the outer surface of the spigot, as well as the dimensional tolerances of this annular space, shall be such that the gasket residual deformation is neither less than 20% nor more than 45% when the spigot is seated to the full depth of the bell socket.

(i) Rubber Gaskets. The rubber gasket for use on pipe shall be cured in such a manner that any cross section will be dense, homogeneous, and free from porosity and other imperfections. The gasket shall be extruded or molded to the specific size within a tolerance of plus or minus 1/32 of an inch at any cross section of the gasket. The gasket shall be fabricated from a high-grade tread-type compound. The basic polymer shall be natural

rubber, or a copolymer of butadiene-styrene synthetic. The compound shall contain no factice and shall have the following characteristics:

(ii)

Tensile strength, pounds per square inch, minimum 2,300
Elongation at break, percent, minimum 425
Shore Durometer (Type A)40-60
Absorption of Water, by weight, 2 days at 70 degree C, percent maximum5
Compression set (constant deflection), percent of original, deflection, maximum 20
Tensile strength after oxygen bomb aging (48 hours strength before aging, minimum) 158 degrees F, 300 per square inch), percent of tensile 80
Increase in Shore durometer hardness after oxygen bomb aging, maximum increase over original Shore Durometer 8
Acetone, extract, percent, maximum 15

The physical properties of the rubber compound shall be determined by tests performed in accordance with appropriate section of Federal Specifications ZZ-R-601a, except for Shore Durometer and compression set. All tests for compression set shall be made in accordance with method B, ASTM Designation D395 for compression set of vulcanized rubber under constant deflection. Tests for Shore Durometer shall be made in accordance with ASTM Designation D676. The Contractor shall furnish certified copies of test reports as evidence of the rubber compound used in all rubber gaskets before any gaskets are used to join pipes. All rubber shall be stored in as cool a place as practicable, preferably at 70 degrees or less, and in no case shall the rubber for joints be stored exposed to the direct rays of the sun. All rubber gaskets shall be stored so as to permit free circulation of air about the rubber.

In all cases during the laying of the pipe extreme care must be taken to see that the rubber gaskets are properly fitted in place and at all times are free from twisting and unusual displacement.

Section 14.03 POLYVINYLCHLORIDE (PVC) SEWER PIPE:

(a) General. This specification covers requirements for PVC pipe and fittings to be furnished for sanitary sewer or land drain.

Pipe and fittings produced to the standards below should be installed in accordance with ASTM recommended practice D-2321, underground installation of flexible thermoplastic sewer pipe. The plastics nomenclature used in the specifications is in accordance with the definitions given in nomenclature D-883, unless otherwise indicated.

(b) Applicable Documents. PVC sewer pipe furnished under this specification shall meet the following ASTM standards: D-256, Impact Strength; D-638, Tensile Strength and Modulus of Elasticity; D-648, Deflection temperature under load of 264 psi; D-1784, Specifications for rigid Poly (VinylChloride) compounds and chlorinated Poly (VinylChloride) compounds; D-3034 (SDR 35) type PSP Poly (VinylChloride) (PVC) sewer pipe and fittings. The requirements of this specification are intended to provide pipe fittings suitable for non-pressure drainage of sewage.

(c) Materials. Basic materials of the pipe and fittings shall be PVC plastic having a self-classification of 12454-B and shall meet the minimum physical properties and chemical resistance of the PVC compound as defined in ASTM D-1784.

(d) Connection Joints. All sizes and classifications of PVC gravity sewer pipe shall have joints utilizing rubber gaskets for sealing. Gaskets shall meet specifications defined in ASTM D-2000-AA820, ASTM 2000-AA625 and ASTM-D-1869.

(e) Workmanship. The pipe and fittings shall be homogeneous throughout and free from visible cracks, holes, foreign inclusions or other injurious defects. The pipe shall be as uniform as commercially practical in color, density, and other physical properties.

(f) Requirements. All materials, dimensions, strengths, qualities, and test requirements shall meet the applicable ASTM requirements. All material used shall be new and shall be protected from any long exposure to the sun.

(g) Inspections. Inspection of the material shall be made as agreed upon by the purchaser and the seller as part of the purchase contract.

(h) Certification. When agreed upon in writing by the purchaser and the seller the certification shall be made the basis of the acceptance of the material. This shall consist of a copy of the manufacturers test report or a statement by the seller, accompanied by a copy of the test results, that the material has been sampled, tested, and inspected in accordance with the provisions of the specification. Each certification so furnished shall be signed by an authorized agent of the seller or manufacturer. Copies will be furnished to the City.

(i) Marking. Pipes in compliance with this standard shall be clearly marked at intervals of five feet (5') or less. The marking on SDR-35 shall be: (1) Mfg's Quality; (2) Nominal Pipe Size; (3) PVC 12454-B; (4) SDR-(Number); (5) PSP Sewer Pipe; (6) Appropriate ASTM Number; (7) Extrusion Code

Section 14.04 SEWER APPURTENANCES

(a) Testing of Gravity Sewer Lines. Gravity sewer lines shall show not more than two hundred (200) gallons infiltration per day, per mile of pipe, per inch nominal diameter. In areas where the ground water level is above the top of the pipe for the entire length of the sewer being tested, the infiltration shall be measured into the pipe to determine if it meets infiltration requirements. In areas where the ground water level is below the top of the pipe the Contractor shall perform an exfiltration or leakage test to provide the City an indication of the condition of the completed system. After capping and blocking all wyes or tees, the pipe between successive manholes shall be filled with water, including the upstream manholes, to not less than four feet (4') nor more than eight feet (8') above the lowest point of the sewer section being tested. The amount of water level shall be measured, and it shall not exceed a rate of two hundred (200) gallons exfiltration per day, per mile of pipe, per inch nominal diameter. Any one individual section may exceed the rate by one and one-half (1 1/2) times if the total length does not exceed the above rate. The program of testing must be mutually determined by the Engineer and the Contractor. The Contractor shall furnish all labor, tools, and equipment necessary to make the tests and to perform any work incidental thereto. The Contractor shall take all necessary precautions to prevent any joints from separating, or other damage to the system while the pipelines or their appurtenances are being tested. He shall, at his own expense, correct any excess leakage and repair any damage to the pipe, and its appurtenances or to any structures indicated by or resulting from these tests. If any section tested fails the test, it shall be repaired or replaced and re-tested at the Contractor's expense, until the measured leakage is within the allowable limits. Prior to the issuance of building permits and preceding the final warranty release of contingency improvement funding the City will require the Developer or his selected contractor to perform a flush cleaning and CCTV video inspection of the sanitary sewer pipes to confirm pipe workmanship and perpetuation of City and American Society of Testing and Materials (ASTM) design and construction requirements. The City may require follow-up video inspections to confirm necessary repairs have been completed from previous inspections. (Ord 04-23)

(b) Deflection and Air Testing of Sewer Lines. The air test shall be made by attaching an air compressor testing apparatus to any suitable opening, and after closing all other inlets and outlets to the system, forcing air into the system until there is a uniform gauge pressure of five (5) pounds per square inch (34.5kPa) or sufficient to balance a column of mercury ten (10 inches (254 mm) in height. The pressure shall be held without introducing additional air for a period of at least fifteen minutes. In addition to the air test of the sewer line, a deflection test will also be required.. Maximum tolerance of grade deviation shall be ½ inch not to exceed 10 feet in length.

(c) Wye Branches. Wye branches or junctions for house connections shall be four (4") inches in diameter, and shall be installed in the sewer at such locations as the Engineer may direct. Wye branches shall be elevated so that the flow line of the wye is above the centerline of the pipe. Located as provided in plans and details herein. Each wye, not used in connecting present laterals, shall be sealed by means of a suitable plug of the same material as the pipe and sealed with joint compound one-fourth (1/4) inch deep over the plug.

(d) Manholes.

(1) General. This item shall consist of the construction or installation of concrete manholes of the various types and diameters shown on the plans and at the designated locations. The item shall include: Ring and cover, steps, and all other incidentals necessary to fully complete the manholes.

(2) Precast Manholes. Precast manholes shall consist of sections of rings of tongue and grooved reinforced concrete pipe on a cast in place foundation. Both circular and conical sections shall meet the requirements of "Reinforced Concrete Sewer Pipe (ASTM Specifications C75)."

Approved eccentric manholes with rungs will be accepted. Concentric manholes will not be accepted.

The precast base section shall be recessed on the bottom edge to receive the pipe entering the manhole. The base section shall extend at least two inches into the concrete of the floor. When practical the base section shall be set in position before the floor is poured; in any case the base section shall be imbedded in the floor before the concrete has taken its initial set.

Joints between sections shall be set in (a) cement grout, or (b) asphaltic sewer joint compound. Joints shall be water tight.

(3) Manhole Covers.

a) The Contractor will furnish and install the cast iron frame and vented cover stamped "Sewer" shown on the plans as a part of the sewer manhole.

b) The Contractor will furnish and install the cast iron frame and non-vented cover stamped "Land Drain" shown on the plans as a part of the land drain manhole.

Formatted: Font: (Default) Times New Roman 10 pt, Condensed by 0.15 pt

Formatted: List Paragraph, Numbered + Level 1 + Numbering Style: a, b, c, … + Start at: 1 + Alignment: Left + Aligned at: 1" + Tab after: 1.5" + Indent at: 1.5"

Formatted: Condensed by 0.15 pt

(4) Castings, Quality of Metal. All castings shall be made of good quality cast iron, strong, tough, straight grained and free from flaws, cracks, blow holes or other defects and of exact form and dimensions shown on the plans. They shall be evenly and firmly set and imbedded as to afford the chance of any movement. The seats and bearings of all frames and covers shall be machine faced and shall fit evenly and firmly and so made as to be interchangeable. Iron shall conform to "Standard Specifications for Gray Iron Castings" ASTM Specification A 48-48 or Class 30.

(5) Grade. Necessary adjustment to bring the cover to finished street grade shall be required and a concrete collar provided that is 12 inches in depth and 12 inches beyond the collar edge.

(6) Manhole Ladders. Manhole ladder steps as shown on manhole plans shall be formed from 3/4" mild steel bar coated with polyethylene or cast iron rungs.

(7) Stubs in Manholes. Shall be flexible rubber boots with stainless steel straps

(8) Revisions to Existing Manholes. All work required to revise or modify existing manholes, in connection with this project, as shown on the plans, or as directed by the Engineer, necessary to complete the project shall be done by the Contractor and no extra compensation shall be allowed for this work. This work shall include such incidentals as raising manhole floors, providing drop type inverts, new invert openings, etc.

(e) Service Lines. Any sewer laterals that may be extended beyond the branch in the main by the Contractor during the construction shall be subject to all the requirements of these specifications for the construction of the main line sewer. ~~Cementing of joints will be allowed.~~With the exception of cul-de-sacs, all service laterals shall extend perpemndicular from the main line into the lot.

Sewer service laterals shall be green in color.
Land drain laterals shall be white in color.

The Contractor shall be fully responsible for any leaks in the sewer laterals, to the same extent as if such leaks were in the sewer main.

Sewer service lines shall be connected into the main line with a ~~tee~~ wye or other fitting manufactured for this purpose. The lateral shall be placed on a ¼ inch per foot minimum slope for 4 inch and shall have cleanouts every 50 feet, at all changes in direction greater than 45° and at drop connections. In the event the main sewer is deeper than required to connect the service line at ¼ inch per foot slope, the service line shall be taken off on a 45° and then flattened to the minimum slope to the house or user. Service lines for residential connections shall be 4-inch. The service line will be installed according to plans and details herein. Lateral piping for connections shall be installed to property line and identified green in color for inspection and shall be provided with a water tight cap or plug and a marker at the end that extends to grade for location purposes.

For all piping located in water at time of excavation a pump shall be provided to allow for proper support and laying of said pipe.

(f) Workmanship. The Contractor, developer, home builder or others responsible for the work shall provide adequate means, acceptable to the City Inspector, to prevent the entrance of foreign materials into the sewer lines via the manholes and service laterals.

Unless otherwise approved the following means of protections shall be used:

Before work is started on street grading and paving jobs where there is a possibility of manhole rings and covers being displaced by equipment, the floor of the manhole shall be completely covered with wood planks, adequately secured to prevent displacement. Individual planks shall have a width greater than the diameter of the sewer pipe. Planking shall remain in place during the life of the job. Upon completion of the work any foreign material that may have entered the manhole shall be removed before the planking is removed.

On resurfacing jobs where it is required that manhole covers be adjusted to new grade, a canvas apron, properly supported or anchored may be used in lieu of wood planking. In every case such apron or planking shall be in place before the work is started and shall not be removed until the work of adjusting the manhole has been completed.

(g) Final Sewer Cleaning and Inspection. Prior to final acceptance, all parts of the system shall be completely finished and cleaned by the developer. All accumulated construction debris, rocks, gravel, and other foreign material shall be removed from the sewer system at or near the closest downstream manhole. If necessary the Contractor shall use mechanical rodding or bucketing equipment. The City Public Works Department shall complete a smoke test of the system to locate cross connections, illegal connections and infiltration points. The City shall notice the home builder or developer of any illegal connections to the sewer system. The homebuilder shall undertake correction of cross connections, illegal connections, or infiltrations. This shall include cleaning of the cross-connected service pipeline acceptable to the City Public Works.

DIVISION 15: CASINGS/BORINGS

Section 15.01 GENERAL:

This division defines the materials and construction requirements for steel casings under canals, railroad tracks, highways and Interstates. All construction operations shall be subject to the approval of the canal, Railroad Company or UDOT whose facility is being crossed. The Developer/Contractor shall make application to and secure permission from the canal, Railroad Company or UDOT before commencing work within the right-of-way. The Developer/Contractor shall provide all insurance and the services of all watchmen and flagmen required by the Railroad Company or UDOT. The Developer/Contractor will pay UDOT for their inspection services.

Section 15.02 MATERIALS:

The pipe shall be welded steel pipe conforming to ASTM Designation A-139, Grade A. Pipe wall thickness shall be a minimum of point three seven five inches (0.375") or as shown on the Drawings.

Section 15.03 CONSTRUCTION METHODS:

The steel pipe casing shall be jacked under the railroad tracks, highway or Interstate using methods submitted to the Public Works Director/Engineer for review by the Public Works Representative/Engineer. Circular pipe joints shall be field welded as the jacking process progresses. The pipe interior shall be completely excavated and cleaned prior to installation of the carrier pipe.

Steel pipe casing shall be installed by open cut under canals. These installations shall be as per details approved by the canal company.

All required approach trenches or working pits shall be excavated and shored as defined in Division 2, Trench Excavation and Backfill. Provisions shall be made for a drain sump in one corner of the working pit to allow for the accumulation and pumping of seepage water, if ground water is expected to be encountered.

Section 15.04 LINE AND GRADE:

Casings shall be installed accurately to the line and grade shown on the Drawings. Casings shall be installed to grade with sufficient accuracy to permit installation of the carrier pipe to the design grade shown on the Drawings or to the cover depth required. The Developer's Public Works Director/Engineer will provide base lines and bench marks at each casing location. Instrument checks of the line and grade shall be made by the Developer/Contractor at intervals sufficient to maintain the casing on line and grade.

Section 15.05 CARRIER PIPE INSTALLATION THROUGH CASINGS:

All carrier pipe to be HDPE fusion welded pipe or equal unless approved by Public Works Director/Engineer. The carrier pipe shall be installed to the grade shown on the Drawings. Casing insulators or chocks shall be fastened to the carrier pipe as per the manufacturer's recommendations. For ductile iron pipe or PVC pipe, insulators shall be installed within one foot on each side of the bell and one in the center of the joint when 18' or 20' long joints are used. Metal components of the insulators or chocks shall be manufactured from 14 Ga. Steel, hot rolled and pickled and plastic coated or Type 304(18-8) stainless steel. The liner shall be polyvinyl chloride or Neoprene Rubber with antioxidant and antiozonant properties for extended service life. Runners shall be glass-reinforced plastic or UHMW polyethylene. Runners shall have high abrasion resistance and a low friction coefficient. Following installation of the carrier pipe the annular space between the inside of the casing and the outside of the carrier pipe shall be blown full of sand. The sanding operation shall be carried out such that sand is placed in the center of the casing first and the annular space filled as the placing pipe is withdrawn. The Developer/Contractor shall not be allowed to wash sand in from the end of the casing.

Section 15.05 Directional Borings

Directional Boring- Directional boring shall be done in accordance to the following guidelines

a. allowed piping:

i.	non-pressurized	- HDPE SDR17 or better grade - DR18
ii.	pressurized	- HDPE SDR11 or better grade Certlock C900/RJ, DR14

b. installation: HDPE pipe must be fused by certified installer certified through approved agency and approved by Syracuse City for all pressurized systems. Gravity fed lines shall be placed to designated grade and elevations as provided by engineer, and shall require video of line for inspection and shall not have deviations in excess of ¾". Deviations in excess will require pipe to be excavated and corrected at cost of contractor.

c. Utility Clearances: all pipe installed through directional boring shall maintain 24" clearance to all utilities. Pot holing of utilities shall be required to verify clearances as may be directed by Inspector and or Engineer. The frequency of these locations shall be at any intersecting location. If piping is parallel to utility then pot holing shall occur no more than at 100 foot intervals. In cases where 24" cannot be maintained for clearance an approved buffer shall be provided to protect existing utilities. This buffer shall be approved prior to installation by the Inspector and/or Engineer.

d. Log book. A log book shall be maintained of all work performed by the contractor and shall include depth, length and any deviation from approved installation guidelines established by Engineer.

e. Gravity lines. Camera of all gravity lines shall be provided for full length and shall be performed by third party agency. Video of line shall be provided on DVD disk or other PC format. No videos on VHS will be accepted. All submission of data shall be directed to the community development department or city inspector and clearly identified to the project or development at time of submittal.

DIVISION 16: POWER, GAS, TELEPHONE AND T.V. CABLE

Section 16.01 POWER:

All power improvements shall comply with the current Utah Power Department Standards. The standard location for power shall be one-foot behind sidewalk line within the 10' utility easement. Where the power is required to cross the right-of-way a conduit with a minimum 4" diameter conduit shall be installed. This conduit shall extend at least 5' beyond curb and gutter and/or sidewalk. The minimum depth of cover for power shall be 24" for secondary power and 32" for primary power.

Section 16.02 GAS:

All gas improvements shall comply with the standards of the gas provider as a minimum. The standard location for gas shall be 3 feet behind curb and gutter or sidewalk within the 10' utility easement. The depth of cover for gas shall be 18-30 inches.

Section 16.03 TELEPHONE:

All telephone improvements shall comply with standards of the telephone provider as a minimum. The standard location for telephone shall be joint trenched with the power line. Where the telephone is required to cross the right-of-way a conduit with a minimum 4" diameter conduit shall be installed. This conduit shall extend at least 5' behind curb and gutter and/or sidewalk. The depth of cover for phone shall be 18-30".

Section 16.04 T.V. CABLE:

All T.V. cable improvements shall comply with standards of the cable T.V. provider as a minimum. The standard location for cable T.V. may be joint trenched with the power and telephone and located six feet beyond the property line within the 10' utility easement. Where the cable T.V. is required to cross the right-of-way a conduit with a minimum 2" diameter conduit shall be installed. This conduit shall extend at least 5' behind the right-of-way line. The depth of cover for cable shall be 18-30".

Section 16.05 FIBER OPTIC:

All fiber optic improvements shall comply with standards of the fiber optic provider as a minimum. All fiber optic lines shall be encased in concrete. The concrete thickness shall be 1-1/2 times the diameter of the conduit. The concrete shall be placed on the top and sides of the conduit. The concrete shall be a minimum 500 psi. The depth of cover for fiber optic shall be 36".

DIVISION 17: SURVEY

Section 17.01 GENERAL:

This division covers surveying issues as they relate to development within Syracuse City. All surveying activities and products shall comply with this division, any existing Davis County regulations, Utah Code Title 17 Chapter 23,

Section 17.02 MONUMENTATION:

Each and every corner on the boundaries of the parcel or tract of land being surveyed should be monumented. Where monuments exist but are not of a durable material they should be replaced. In such cases where the placement of a required monument at its proper location is impractical, it is permissible to set a reference monument close by the point, and if such reference monument is set its location shall be properly shown on the plat of survey. When conditions warrant setting a monument on an offset, the location shall be selected so the monument lies on a line of the survey or on the prolongation of such line. Offsets should not be in fractional feet unless a physical obstruction affects their location.

Artificial monuments should be constructed of durable material capable of being detected by commonly used magnetic locators. Where practical, monuments shall be solid and substantially free from movement. These monuments shall have affixed thereto a cap or other device bearing the registration number of the surveyor in responsible charge, or the regular business name or the governmental agency legibly stamped or imprinted thereon. Unless extenuating circumstances dictate, the minimum size monument should be not less than 5/8 inch in diameter, the minimum length should be 24 inches.

Following the construction of the curb, a nail shall be permanently placed in the curb at the point of intersection of the extension of the lot line with the curb line.

Section 17.03 GRAPHIC REPRESENTATION OF LAND SURVEYS:

This section covers the graphical representation that is to be submitted by the surveyor.

Sub-Section A Plats of Survey

Surveyors should:

1. complete and file plats or certificates with proper local authority, in accordance with Utah Code 17-23-17 or other local regulations,

2. prepare survey records on stable, durable media capable of reproduction, recording, digitizing, and permanent storage,

3. clearly and understandably portray conflicting monuments or property lines showing gaps or overlaps with adjoining properties and inform clients, of their existence,

4. show actual measured values on plats and certificates, to enable their future retracement. Values from the record should be shown in record units for comparison,

5. clearly indicate lines of occupation, and the extent of any encroachment relative to parcel boundaries, and

6. label adjoining properties with owners name if known, include reference to documents of record.

Sub-Section B Survey Certification

Surveyors should:

1. identify the record legal descriptions of the parcels being surveyed giving reference to the recordation information (i.e. Book, Page and Entry Number) of the document relied upon for the record description,

2. when establishing new boundaries not previously of record, include reference to the parent parcel description together with the description of the created parcel. Include a description of the remainder of the parent parcel if known, and

3. when preparing a composite description of several surveyed parcels, identify the record legal descriptions of the parcels (See paragraph 1 above) and include a statement of purpose for the composite in the narrative of the survey.

Sub-Section C Survey Narrative

Surveyors should:

1. explain and identify the purpose of the survey and its intended use such as, construction of improvements, determination of encroachments, transfer of ownership, parcel division, etc.

2. clearly indicate two existing monumented fixed points of reference relied upon for the basis of bearings defining the orientation for the lines of the survey,

3. include a reference to documents of record relied upon for preparation of the survey, and give a physical description of the monuments found and used.

4. include methods of interpretation of deed elements and physical evidence upon which conclusions were reached, and

5. indicate the theory of location for corners utilized to resolve record conflicts and to draw conclusions in accordance with law or precedence.

Sub-Section D Legal Descriptions

Surveyors should:

1. include a sufficient caption, body, and where applicable, augmenting and qualifying clauses when preparing a legal description,

2. state clearly the relationship between the real property being described and the survey control or basis of unique location,

3. state clearly the basis of bearings or language which otherwise makes definite the method of direction and orientation for the lines of the subject property being described and the survey control related thereto when applicable,

4. make full and complete citation to maps, plats, documents, and other matters of record, fact or pertinence, which are intended to be incorporated into and made a part of the legal description by reference thereto,

5. call for complete and detailed descriptions of physical monuments, both natural and artificial, such as to facilitate future recovery and to enable positive identification,

6. when appropriate, incorporate either directly or by citation, sufficient data to enable a check of mathematical closure for the subject property being described, and

7. affix their validated land surveyors seal to the legal description.

Section 17.04 CORNER RECORDATION

Surveyors should:

1. file a written record in accordance with Utah Code 17-23-17.5 for each government corner used as control unless the record currently reflects the existing conditions,

2. set a monument of durable quality witnessed by at least four reference monuments when rehabilitating a government corner,

3. set a witness monument wherever the nature of the ground will not allow the setting of a monument at the exact corner,

4. carefully describe the monument and all references including their bearings and distances,

5. include the state plane coordinates of the corner pursuant to Utah Code 57-10, Utah Coordinate System, if known, and

6. utilize a form which portrays the information in a clear fashion as suggested on the attached monument recordation form.

DIVISION 18: STREET AND TRAIL

Section 18.01 GENERAL

Traditional neighborhood design is utilized as the basis for street layout and design standards. This planning and design concept is used because it creates streets that provide multiple transportation options, focuses on a safe environment for all users, treats streets as public spaces, and enhances the livability of the neighborhoods.

Section 18.02 CONDITIONS TO BE CONSIDERED FOR STREET DESIGN

The following conditions (existing and projected) should be considered in order to design each street.

- The volume of pedestrian, bicycle and motor vehicle traffic each day and at peak hours;
- The speeds of motor vehicles and number bicycles and pedestrians along the street;
- The mix of pedestrian, bicycle and motor vehicle traffic (including percentage of large trucks);
- The zoning and surrounding future land uses (assess pedestrian, bicycle and transit generators and attractors such as schools, shopping areas, community buildings, parks, churches and gathering places);
- The natural features of the area such as slope, mature trees, creeks, wetlands, etc.;
- The adjacent building setbacks with respect to the street;
- Whether adjacent properties will be serviced directly from the street, or from alleys; and
- The function of the street and relation to the surrounding street network.

This planning and design concept is used because it creates streets that provide multiple transportation options, focuses on a safe environment for all users, treats streets as public spaces, and enhances the livability of the neighborhoods.

Section 18. 03 STREET DESIGN CONSIDERATIONS

All streets in Syracuse should be designed using the following assumptions:

- All designs encourage pedestrian and bicycle travel.
- Neighborhood streets (Neighborhood Collectors and Neighborhood Streets) designed for 20 to 30 mile-per-hour (mph).
- All new streets are paved.
- All streets have standard vertical, non-mountable curbs.
- Park strips and sidewalk widths do not include the curb.
- All streets have park strips and sidewalks where designated.
- In certain situations, where the physical features of the land create severe constraints, or natural features need to be preserved, exceptions may be made.
- Landscaped park strips.
- Garages are set back from the sidewalk so parked vehicles are clear of sidewalks.

Section 18.04 STREET TREES

Street trees are encouraged to be planted on neighborhood streets to create attractive and healthy neighborhood environments, and to enhance the image of a street as a place with which residents can identify. Trees planted in the park strips, along the sidewalk, or anywhere in the public right-of-way must be from the City of Syracuse's list of acceptable trees.

Section 18.05 CURBS

Curbs should be a 2' ft 6" inch standard, vertical 6" inch high curb on all improved streets.

Section 18.06 PRESERVING NATURAL FEATURES

Streets shall be located in a manner which preserves natural features to the greatest extent feasible.

1. Whenever possible, street alignments shall follow natural contours and features so that visual and physical access to the natural feature is possible.

2. Streets shall be situated between natural features, such as creeks, mature trees, drainages, open spaces, and individual parcels in order to appropriately incorporate such significant neighborhood features.

Section 18.07 SAFETY

In any design situation, no topic is more important than human safety. Street design situations require the consideration of many, sometimes competing elements to make the street safe for all modes of travel. In street design, the standards that should be applied and questions that should be asked include the following:

- What actions may reasonably be expected of motorists and non-motorists along the street?
- Given a foreseeable but infrequent problem, what are the ramifications on other users of the street if the problem is specially addressed in the design?
- When balancing conflicting matters, the frequency of conflict between the two or more competing elements and the resulting frequency of difficulties that will be experienced should be documented.
- What are the physical consequences of a particular design element or decision?
- If in doubt, favor the non-motorist and accommodate the motorist.

Section 18.08 RESIDENTIAL NEIGHBORHOOD STREET STANDARDS

Neighborhood streets have different functions. Some serve as a collector providing access to neighborhood cores, gather traffic from various parts of the neighborhood, and distribute it to the major street system. Some serve as access streets to the collectors having minimal traffic and very little through traffic. Different configurations are indicated on the Standard Drawings.

Section 18.09 HILLSIDE STREETS AND NATURAL AREAS

Occasionally, streets are constructed in locations with significant natural features, which require special accommodations such as in hilly areas, near creeks, rock outcroppings, drainages, or wetlands. In these cases, specific considerations should be made to minimize negative impacts.

Section 18.10 NON-MOTORIZED TRAIL

Multi-use paths are off-street facilities used primarily for walking and bicycling. These paths can be relatively short connections between neighborhoods (neighborhood connections), or longer paths adjacent to rivers, creeks, railroad tracks and open space. The trail shall have a minimum 14-foot wide right-of-way with a 10-foot wide paved surface and shall be constructed as indicated in the Standard Drawings.

Section 18.11 EQUESTRIAN TRAIL

Equestrian trails shall have a minimum of a 10 foot wide right-of-way with a minimum 6-foot wide tread situated inside the right-of-way. The equestrian trail shall be constructed using compacted roadbase at a minimum 6-inch thickness or foundation rock through wet areas as indicated in the Standard Drawings. Minimum clearance shall be 10 foot vertical, 3 foot horizontal from a wall or fence, and 4 foot horizontal from a bicycle lane, and 6 foot from vehicular travel lanes.

Section 18.12 BIKE LANES

Bike Lanes shall conform to AASHTO standards and shall be installed as indicated in the Standard Drawings. Minimum width of a bike lane shall be 4-feet. Where on-street parking is allowed, a five foot wide bike lane is preferred. Pavement making and signs shall comply with current MUTCD standards.

DIVISION 19: ROADWAY LIGHTING

Section 19.01 GENERAL

All outdoor artificial street illuminating devices shall be installed in conformance with the provisions of this section and applicable provisions of the Zoning Ordinance, Subdivision Ordinance, and the current Electric and Electric Safety Codes adopted by the state of Utah. The spacing and arrangement of streetlights will be designed during the preliminary plat or site plan review phases of a development and shall be a minimum of one light per every 800 feet of roadway, every 400 feet of cul-de-sac depth and at every roadway intersection. For cul-de-sac lengths in excess of 400 feet with a dogleg street bend of 45°or greater, the subdivider shall be responsible to install a streetlight at the dogleg of the cul-de-sac in addition to the streetlight at the end of the cul-de-sac (8.02.080).

Section 19.02 APPROVED MATERIALS & METHODS OF INSTALLATION

The provisions of this section are to prevent the use of any material or method of installation not specifically prescribed by this section. The City Council must approve any proposed alternatives.

Sub-section A. Type and Style of Lights:
Street lights shall be purchased by the developer and may be "GraneVille" (series 2) with a 12-foot Salem pole powder coated black. ~~-~~ All street lights shall have a minimum of 10 feet of clearance from any overhead power line.

Sub-section B. Lamp Source:
~~High Pressure Sodium.~~Induction or approved equal is the lamp source that will be utilized throughout the City for all roadway lighting. Bulb wattages shall be based on the following table:

STREET CLASSIFICATION	BULB WATTAGE
Arterial/Minor Arterial	200
Collector	100
Local/Low Volume Local	40-60

Sub-section C. Deviations:
Any material or method of installation not specifically prescribed in this section will be evaluated by the City Council as stated above, for approval based on the following criteria:

(1) It provides equivalence to the applicable specific requirements of this section.

(2) It is otherwise satisfactory in complying with the intent of this section.

(3) The plans, and variants to this section for proposed lighting schemes, will be submitted to the Community Development Department for approval, and shall be sufficiently complete, with all variants from this section noted, to enable the City Council to readily determine whether compliance with the intent of this section will be secured.

Sub-section D. Variances:
Any person desiring to install an outdoor lighting fixture in violation of this section may apply to the City Council with recommendation from the Planning Commission for a variance from the regulation in question.

Section 19.03 ROADWAY LIGHTING

Sub-section A. Non-decorative Poles and Heads:
Non-decorative poles and heads shall only be utilized in the City where, upon the recommendation of the Planning Commission and approval of the City Council, a specific lighting plan has been approved.

(1) All roadway pole mounted fixtures shall not be mounted above thirty (30) feet, as measured from the top of the fixture to the adjacent grade of the horizontal plane being lit by the fixture.

(2) The fixture should house an induction ~~high-pressure sodium~~ lamp, with a cut-off lens. ~~and no more than 150 watts/pole.~~

Sub-section B. Decorative Poles and Heads:
Decorative poles and heads shall be installed as outlined on plans approved through the Community Development Department.

(1) All decorative roadway pole mounted fixtures shall not be mounted above eighteen (18) feet, as measured from the top of the fixture to the adjacent grade of the horizontal plane being lit by the fixture.

(2) The fixture should house an induction ~~high-pressure sodium~~ lamp. ~~, with no more than 150 watts/pole.~~

(3) Decorative roadway application fixtures should utilize highly refractive globes, which have a minimum of 85 horizontal and 345 vertical prisms, to evenly direct the light, and evenly diffuse the light source. The fixture should have the ability to have internal light directing reflectors that can be field installed after fixture installation, to accommodate customization of the lighting output, and/or to redirect unwanted light to the traffic area.

(4) The fixture should have photometrics, so that when used on a 40-foot wide road and placed on opposing 180 feet spacing, mounted on an 18-foot pole with a type III distribution and 150 watt HPS head, the following horizontal foot-candles should be produced on the roadway (using a .85 light loss factor):

(a) Average Maintained = 1 foot-candle or more.

(b) Maintained minimum = .4 foot-candles or more.

(c) Max/Min Uniformity = 4.54 or less.

(5) At 40 feet away from the pole, the roadway should not have less than .1 horizontal foot-candle minimum maintained at any point on the road and 1.5 vertical foot-candles, as measured from ground level to six feet above the ground, in the middle of the road.

(6) The refractor should be made of acrylic, and should be available in type III, and IV distributions, with a reflector in the top to eliminate uplight and redirect the light downward toward the surface, and a house light shield. It sets in die-cast aluminum polyester powder coated pod, which will allow easy access to all of the internal electrical components. It should have internal twist-lock style photocell receptacle when needed, and quick release wiring components on the socket, ballast, and igniter, with a Ground Fault Interrupted outlet mounted on the pod. Approved Manufacturers are as follows:

(a) Hadco Streetscapes Refractive Globes UT33A150SE-150HPS style or equal.

(7) Light posts shall be twelve (12) foot tall, 5” x 3” smooth tapered aluminum pole with a .125” wall thickness. Bolt circle shall be 14” diameter, four (4) bolts, 90° apart, with a decorative base 12 ¾” square X 45” high, with a three (3) inch outside diameter fitter. Aluminum is to be polyester powder coated black.

(a) Hadco Streetscapes Posts – 2520 style or equal.

Sub-section C. ROAD LIGHT LEVELS:
Roadway Lighting Maximum Levels (as measured at the horizontal plane being lit).

(1) The maximum point should not exceed 6 foot-candles within the circulation area being lit.

(2) The average light level should not exceed 1 foot-candle within the circulation area being lit.

(3) No more than 1 foot-candle will be allowed outside of 20 feet of the circulation area being lit.

(4) No more than .05 foot-candles will be allowed outside the property lines of the easement.

(5) No more than .01 foot-candles should be allowed to spill on any residential property as a result of another party lighting their own property.

Section 19.04 WIRING

Sub-section A. Lamp and Pole Wiring:
All internal wiring of the lamps shall be accomplished at the manufacturer's facilities. No alterations or modifications shall be accomplished as part of the installation of the lamps.

Sub-section B. Applicable Codes:
All underground wiring shall be accomplished in accordance with the current Electric Code adopted by the State of Utah.

Sub-section C. Wire or Cable:
Wire shall be a minimum eight (8) gauge RHW or equal with three single strand copper wire. ~~copper wire and shall have appropriate coatings as required by the current Electrical Code.~~ Wire shall be color coded as follows:

Black - Power
White - Neutral
Green - Ground

Formatted: Indent: First line: 0.5"
Formatted: Indent: Left: 1"

Wire and cable placed in conduit or direct burial shall be rated for the applicable use. All wiring ran from Rocky Mountain Power's transformer to the point of disconnect shall be run in conduit. All installation, connections and coatings shall meet current electrical code.

Sub-section D. Ground:
Pole will be grounded to grounding rod set in the footing as outlined in the standard Drawings. Neutral lines shall not be connected to the pole.

Sub-section E. Depth of Bury:
Direct burial cable conductors and non-metallic raceways shall be a minimum of twenty-four inches (24") below the top back of curb or finished grade, whichever is lower. All cable or conduit shall be inside a raceway where less than twenty-four inches (24") below the top back of curb or finished grade. Cables, conductors, and raceways shall have their location identified by a warning ribbon that is placed in the trench at least twelve inches (12") above the underground installation.

Sub-section F. Splices and Taps:
Buried conductors or cables, either contained in a non-metallic raceway or direct bury shall have no splices or taps.

Sub-section G. Backfill:
Backfill that contains large rocks, paving materials, cinders, large or sharply angular substances, or corrosive materials that may damage raceway, cables, or conductors or prevent adequate compaction of fill or contribute to corrosion of raceways, cables, or conduits shall not be utilized.

Sub-section H. Raceway Seals:
Conduits or raceways through which moisture may contact energized live parts shall be sealed or plugged at both ends. (Ord 02-19)

DIVISION 20: UNDERGROUND IRRIGATION SYSTEMS

PART 1 GENERAL

Section 20.01.01 SUMMARY

A. Section includes:
   1. Underground irrigation systems complete with heads, valves, controls, and accessories.

B. Related sections:
   1. Section 32 94 23 Planting

Section 20.01.02 REFERENCE STANDARDS

A. NFPA 70: National Electric Code.

B. ASTM: American Society for Testing and Materials

C. IA: The Irrigation Association: Main BMP Document, Landscape Irrigation Scheduling and Water Management Document.

D. ASIC: American Society of Irrigation Consultants: ASIC Grounding Guideline

E. City Codes/Ordinances relating to Landscape and Irrigation

Section 20.01.03 DEFINITIONS

A. Water Supply: Culinary and/or secondary pumping, piping, and components provided and installed by others to provide irrigation water to this project. Includes but is not limited to: storage ponds, pump stations, saddles, nipples, spools, shut-off valves, corporation stop valves, water meters, pressure regulation valves, and piping or components upstream of (or prior to) the Point-of-Connection.

B. Point-of-Connection: Location where the Contractor shall tie into the water supply for landscape irrigation needs and use. Tie to existing piping.

C. Main Line Piping: Pressurized piping downstream of the point-of-connection to provide water to remote control valves and quick coupling valves. Normally piping is under constant pressure.

D. Lateral Line Piping: Circuit piping downstream of the remote control valves to provide water to sprinkler heads, drip system, or bubblers. Normally piping is under pressure only when control valve is in operation.

Section 20.01.04 PERFORMANCE REQUIREMENTS

A. The work to be performed under this Section shall consist of furnishing all labor and materials necessary to construct a complete working and tested underground sprinkler irrigation system per all drawings and specifications, providing one hundred (100) percent head-to-head coverage on all lawn and planting areas on the site without overspray onto hardscape, buildings, or other site features. Included also will be system maintenance and warranties.

B. The efficiency of the completed irrigation system shall meet the following minimum standards:
   1. Circuits using spray sprinklers shall perform at a minimum 60% efficiency.
   2. Circuits using rotor sprinklers shall perform at a minimum 70% efficiency.
   3. Efficiency shall be determined by an independent water audit performed by a certified irrigation auditor selected by the Owner. The Contractor shall include in his bid price the cost of this audit. The audit shall be conducted after substantial completion and before final acceptance of the irrigation system.

C. The Contractor shall perform, but not be limited to, all of the following functions: paying all connection fees, deposits, and all other charges related to the connection to the water source; obtain all permits; complete all excavation and backfill; provide backflow device, tapping saddle, yoke, stop and waste, corp. cock, concrete vaults and miscellaneous pipe fittings; make necessary road repairs; provide safety barrier; make connection to water source; install all electric valves, valve control devices, meter base, conduit, junction boxes, and all necessary wiring. All work shall be in compliance to applicable codes and requirements of the utility companies involved.

D. If any or all of the above mentioned fees or charges are not listed on the bidding schedule or on plan, they shall be included in the bid lump sum price of the irrigation sprinkling system item.

E. Contractor shall verify with the appropriate water district the location of the water service main line and water pressure, and complete all requirements necessary to bring water service to the site. Total cost to be included in the irrigation sprinkling system bid item.

F. The above specification statement supersedes the graphic representation location of the contract limit line. This pertains to the water line location on either side of the street adjacent to the project site.
G. All work shall be done in accordance with the drawings and specifications, as well as all applicable water and electrical codes.
H. The Contractor shall operate, maintain until acceptance, and guarantee the new system as specified herein until all lawn and plants installed on this project have become established and have been accepted by the Owner.

Section 20.01.05 SUBMITTALS

A. Product Data: Complete set of manufacturer's technical data and installation instructions for all equipment to be installed on the project. Submittal shall be made prior to commencement of any irrigation work.
B. Main line and lateral line pressure test results: Submitted at the time of occurrence.
C. Operation and Maintenance (O&M) Manual:
   1. O&M manual shall contain the following information:
      a. Manufacturer cut sheets and current printed specifications for each element or component of the irrigation system.
      b. Parts list for each operating element of the system.
      c. Manufacturer's printed literature on operation and maintenance of operating elements of the system.
      d. Section listing instructions for overall system operation and maintenance. Include directions for spring start-up and winterization.
   2. Manual shall be submitted at least thirty (30) days prior to final inspection and acceptance of the project.
D. Complete As-Built Drawings:
   1. Drawings shall conform to the following criteria:
      a. One (1) 22" x 34" and one (1) 11" x 17" drawing shall be submitted.
      b. All submitted drawings shall be made on mylar.
      c. Show detail and dimension changes made during installation.
      d. Include field dimension locations of sleeving, points of connection, main line piping, wiring runs not contained in main line pipe trenches, valves and valve boxes, quick coupling valves.
      e. Dimensions shall be taken from permanent constructed surfaces, features, or finished edges located at or above finished grade.
   2. A complete set of as-built drawings shall also be submitted in electronic digital format (.pdf).
   3. As-Built drawings shall be submitted prior to final inspection and acceptance.
E. Controller Map: Each controller shall be equipped with a color-coded copy of the area that the controller services. Include valve zone number, type of plant material irrigated, and zone location on the project. Laminate map with heat shrink clear plastic and mount inside controller.

Section 20.01.06 QUALITY ASSURANCE

A. Acceptance: Do not install work of this section prior to acceptance of the area by the Owner as being properly prepared to receive said work (i.e. at proper grade, properly compacted, permanent fixtures in place, etc.).
B. Adequate Water Supply: Contractor shall verify that proper connection is available to supply lines, and is of adequate size and volume. Perform static water pressure test prior to commencement of work. Notify Owner of problems encountered prior to proceeding.
C. Workmanship: It is the intent of this specification that all materials herein specified and shown on the construction documents shall be of the highest quality available and meet the requirements specified. All work shall be performed in accordance with the best standards of practice relating to the trade.
D. The Contractor shall provide to the City a document or resume which includes the following information:
   1. The Contractor has been installing sprinkler systems on commercial projects for at least ten (10) previous consecutive years.
   2. The Contractor is currently licensed to perform landscape construction in the State of Utah.
   3. The Contractor is bondable and insurable for the work to be performed.

4. References of at least five (5) projects of similar size and scope completed within the last five (5) years. Three (3) of the projects listed must be located in the Wasatch Front area.
5. List of suppliers from whom materials will be obtained for use on this project.

Section 20.01.07 PROJECT CONDITIONS

A. Any discrepancies between existing site conditions and those indicated on the plans shall be called to the attention of the Landscape Architect prior to continuance of the project.

B. The Contractor shall use only the equipment and products specified in the construction drawings. No substitution of materials will be allowed on the irrigation system without prior authorization from the Landscape Architect and the Owner.

C. During delivery, installation, and storage of materials for the project, all materials shall be protected from contamination, damage, vandalism, and prolonged exposure to sunlight. All material stored at the project site shall be neatly organized in a compact arrangement and storage shall not disrupt the project Owner or other trades on the project site. All material to be installed shall be handled by the Contractor with care to avoid breakage or damage. Materials damaged by the Contractor shall not be used, but shall be replaced with new materials at the Contractor's expense.

D. The Contractor shall familiarize himself and his workmen with all hazards and existing utilities prior to commencing work.

PART 2 PRODUCTS

20.02.01 GENERAL

A. The Contractor shall provide all materials to be used on this project. The Contractor shall not remove any material purchased for this project from the project site, nor mix these project materials with other contractor-owned materials. The Owner retains the right to purchase and provide project materials.

B. Handling and unloading of all equipment, pipe, and fittings shall be in such a manner as to insure delivery at the job site in a sound, undamaged condition. Any equipment or pipe found to be damaged or defective in workmanship or materials shall be rejected or removed and replaced if found installed.

20.02.02 PIPE

A. All PVC pipe used on this project for the irrigation system shall conform to the requirements of ASTM -1685. It shall be free from cracks, holes, foreign material, blisters, inside bubbles, wrinkles, and dents.

B. All main line pipe, four (4) inches inside diameter and smaller shall be Schedule 40 PVC solvent weld bell end unless otherwise specified.

C. All main line pipe, six (6) inches inside diameter and larger, shall be PVC Class 200 gasketed bell end (except as required for conversion to metal fittings).

D. All lateral line pipe shall be Schedule 40 PVC solvent weld.

E. Maximum flows allowed through main line and lateral line pipe shall be determined by water speed in the pipe. The maximum water speed allowed in both main lines and lateral lines is five (5) feet per second. The resulting maximum gallons per minute (gpm) allowed to flow through PVC pipes are as follows:

PIPE SIZE	GPM
3/4"	8
1"	12
1 1/4"	22
1 ½"	30
2"	50
2 ½"	75
3"	110
4"	190
6"	425

For sizes larger than 6", consult manufacturer's recommendations.

F. No bends in pipe shall be permitted. The Contractor shall use elbow fittings of ninety (90), forty five (45), twenty two and one half (22-1/2), and eleven and one quarter (11-1/4) degrees as individual situations demand.

G. All pipe used from the main line to the control valves shall be solvent weld Sch. 80 PVC pipe unless otherwise noted or shown on the construction drawings.

20.02.03 FITTINGS

A. All PVC fittings used on this project for the irrigation system shall conform to the requirements of ASTM D-2466.

B. Main Line Fittings:
1. All main line fittings four (4) inches inside diameter and larger shall be either M.J. or deep bell push-on, gasketed, ductile iron.
2. All main line fittings three (3) inches and smaller inside diameter shall be solvent weld Schedule 80 PVC.
3. All main line fittings three (3) inches and larger, whether ductile iron or solvent weld, shall be thrust blocked per details.
4. All main lines three (3) inches and larger having a horizontal change of direction shall have proper concrete thrust blocks installed. Vertical changes in direction shall require the use of M.J or ductile iron fittings with thrust restraining devices (Mega Lug or Harco Knuckle Joint Restraints) in addition to appropriate concrete thrust blocking. The size and type of thrust block depends on pressure, pipe size, type of soil, and type of fitting. As a general rule, one (1) cubic foot minimum of class AA (AE) Type II concrete is required for each thrust block. Follow thrust blocking details for calculating thrust block size.
5. M.J. tees, Schedule 80 tees with SxT Schedule 80 bushings, or Harco ductile iron service tees are approved on PVC main lines for automatic control valve installation. M.J. fittings shall be greased and wrapped.

C. Lateral Line Fittings:
1. All lateral line fittings shall be solvent weld Schedule 40 PVC.
2. All risers and exposed fittings shall be solvent weld Schedule 80 PVC, including conversions to metal pipe and fixtures, unless otherwise noted on the plans.

D. PVC Cement: Solvent weld or glued joints shall use the following materials:
1. Primer: IPS Weld-On P-70 Primer (purple), ASTM D-2564.
2. Cement: IPS Weld-On 711 Heavy Bodied PVC Cement (gray), ASTM F-656.

20.02.04 VALVES

A. Master Valve: All master valves shall be as specified in the Irrigation Equipment Schedule. Master valve assembly shall be installed according to detail in drawings.

B. Isolation Gate Valve:
1. Isolation gate valves shall only be used on the main line.
2. Isolation gate valves shall conform to AWWA specification C 509. They shall be of Class 200 cast iron body, resilient-seat, and have a non-rising stem with rubber "0" rings. Stems shall be of cold rolled, solid bronze, high tensile strength. Valves shall be hydrostatically pressure tested for 400 P.S.I. and shall be designated for a working pressure of 200 P.S.I. Each valve shall contain a resilient wedge urethane rubber seat. Unless otherwise shown or specified, valves three (3) inches and larger shall have flanged end connections.
3. Buried valves shall have two (2) inch square operating nuts. No handles or wheels will be permitted. Valves inside structures (vaults or valve boxes) shall have wheel handles.
4. Action unions shall be installed on each side of all valves except flanged valves.
5. The Contractor shall provide adequate material for the connection of valves to the system, i.e., adapters, flanges, nuts, bolts, gaskets, etc.
6. All buried main line isolation valves shall be fitted with a four (4) inch minimum diameter pipe sleeve place over the top of the valve vertically and extended to grade. Cover with a ten (10) inch round "Carson" valve box with bolt down lid and set at finished grade.

C. Remote Control Valve Assembly:
1. Remote control valves shall be as specified in the Irrigation Equipment Schedule.
2. Remote control valves shall be globe configuration, electrically activated, normally closed, forward flow design.
3. All pipe on the control valve assembly shall be Schedule 80 PVC pipe. See detailed drawings.

4. Action unions shall be installed on each side of the control valve assembly, allowing valve to be removed from the box for maintenance without cutting pipe.
5. Each control valve shall have a brass gate or ball valve installed immediately upstream of the valve and located within the same valve box.
6. Flows through each remote control valve shall not exceed the following limits:

VALVE SIZE	GPM RANGE
1"	1 - 30
1 ½"	31 - 75
2"	76 - 150

7. Each drip remote control valve assembly shall contain the following components:
   a. PVC ball valve.
   b. Inline disc or screen filter with 100 micron/150 mesh filter element.
   c. Remote control valve capable of operating at very low flow levels.
   d. Inline pressure regulator.

   All components shall be installed according to manufacturer's recommendations, and located within a single valve box, one valve per box (no multi-valve assemblies permitted).

D. Quick Coupling Valve Assembly:
1. Quick coupling valves shall be as specified in the Irrigation Equipment Schedule.
2. Quick coupling valves shall be heavy duty brass, two-piece, single lug locking cap.
3. The Contractor shall provide to the Owner at least 1 cap lock key and 1 quick coupling key with a swivel hose bib attached. These keys shall be delivered prior to final acceptance of the project.

E. Manual Drain Valve Assembly:
1. All manual drains shall be three quarter (3/4) inch heavy duty brass ball valve.
2. Manual drain valves shall be required at all low points in the main lines. See plans, notes, and details.
3. The location of each manual drain shall be shown on the "as built" drawing with dimensions from the nearest permanent fixture, such as a building corner, etc.
4. Each manual drain valve will be accessed by a vertical two (2) inch PVC Schedule 40 pipe sleeve, capped by a locking valve cap with a key, enclosed within a ten (10) inch round valve box with bolt down lid. The top of the drain sleeve shall be three to six (3 - 6) inches below the lid of the valve box.
5. Each manual drain shall empty into a gravel sump, a minimum of eighteen (18) inches by eighteen (18) inches by twelve (12) inches deep. The gravel shall be washed three quarter (3/4) inch rock.

F. Automatic Drain Valves: Automatic drain valves shall not be used.

20.02.05 VALVE BOXES

A. All valve boxes shall be Carson series with locking lid, or approved equal.
B. Valve box size shall be listed in the installation details for each irrigation system component.

20.02.06 BACKFLOW PREVENTION ASSEMBLY

A. Backflow prevention devices shall be a reduced pressure principle backflow preventer consisting of a pressure differential relief valve located between two independently operated spring-loaded "Y" type center guided check valves. Assembly shall also have two full port resilient seated ball valves for shut-off and four resilient seated ball valve test cocks and bronze body construction. Larger sizes (2 ½" and up) may have two non-rising stem resilient wedge gate valves in lieu of ball valves.
B. Backflow preventer shall be as specified in the Irrigation Equipment Schedule.

20.02.07 FILTER AND ENCLOSURE

A. Filters and their enclosures shall be required on all systems using secondary water. Systems using reclaimed water (from a wastewater treatment plant) may not require a filter.
B. Filters shall be as specified in the Irrigation Equipment Schedule. Filters may be either plastic or steel construction, with screen (perforated or weavewire stainless steel) or plastic disc filter elements.
C. Filter enclosures shall be either commercially or custom fabricated. They shall be constructed of solid sheet marine grade aluminum, with one hundred (100) percent stainless steel hardware, and locking mechanism. They shall exhibit vandal- and weather-resistance and offer easy access.

D. Enclosures shall be mounted on either a pre-manufactured mounting pad with support base or minimum six (6) inch concrete pads. See detail.

20.02.08 AUTOMATIC CONTROL SYSTEM

A. Furnish a low voltage automatic control system manufactured expressly for the operation of automatic control valves used in an underground irrigation system.

B. Automatic controller devices shall be as specified in the Irrigation Equipment Schedule. No substitutions shall be allowed. Unless specified otherwise, install as follows:
   1. Install in stainless steel enclosure, model as specified in the Irrigation Equipment Schedule.
   2. Whenever a single site has 2 or more controllers, the 2nd and subsequent controllers shall also be mounted in a separate stainless steel enclosure as specified in the Irrigation Equipment Schedule.
   3. Metered enclosures, if required, shall be mounted on a 4" thick concrete pad. Regular enclosures may use a pre-manufactured mounting system as specified in the Irrigation Equipment Schedule.

C. Provide adequate capacity to accommodate each valve on the system separately. Do not double valves to circuits.

D. The Contractor shall provide 120 volt electrical service to the controller. Install meter inside meter socket of the enclosure. Coordinate this work with the Owner and other trades involved in the project.

E. Every controller shall be installed to control a single point of connection (P.O.C.). That point of connection shall be exclusively associated with that controller. Each P.O.C. assembly shall consist of the main line tap, reverse pressure backflow prevention device (if required), filter (if required), master control valve, flow sensing device, manual drain valve, and quick coupling valve. No controller shall be wired to control valves which are connected to another P.O.C.

20.02.09 CONTROL VALVE WIRE

A. All irrigation control wire shall bear approval as U.L. listed type of underground feeder (direct burial) and each conductor shall be of electrical conductivity grade solid copper in accordance with ASTM 30.

B. No aluminum wire shall be used on this project.

C. Wire size shall be #14 gauge minimum.

D. Two spare wires shall be run from each controller to the farthest valve under its control in all directions and any valve which is on a dead-end line.

E. All wire crossing water, attached to bridges, going under paving, or where conditions require protection, shall be housed in conduit or sleeves. All out-of-ground conduits shall be rigid metal. All buried conduit may be PVC.

F. All splices shall be water-tight. All connections made inside the box to connect wires to the valve shall be made using a 3M DBY dry-splice connector or pre-approved equal. Each connector shall be completely sealed and water-proofed.

G. All other splices in control wire shall be housed in a separate valve box.

H. The pigment or color of the wires shall be integrated into the covering, rather than painted on. All common or ground wires shall be white in color. Where more than one controller is required, a different colored hot wire shall be used for each controller. A separate color shall be used for all spare wires.

20.02.10 SPRINKLER HEADS

A. General:
   1. All heads used on this project shall be as specified in the Irrigation Equipment Schedule shown on the plans.
   2. All sprinkler heads and nozzles shall be as specified in the Irrigation Equipment Schedule.

B. Spray/Rotary Sprinklers:
   1. Spray/Rotary sprinklers shall have either four (4), six (6), or twelve (12) inch pop-up height and built-in check valve. In areas where water pressures are high or fluctuating, pressure regulating series sprinklers shall be used.
   2. Spray/Rotary sprinkler nozzles shall be plastic matching precipitation rate nozzles. Variable arc nozzles may be used to meet irregular-shaped areas.
   3. Attachment options shall be as specified in the installation details.

C. Rotor Sprinklers:
   1. Rotor sprinklers shall be equipped with stainless steel rotor sleeve and check valve.
   2. Rotor sprinkler nozzles shall be as manufactured for each individual model.
   3. Small rotor sprinklers (½" bottom inlet) may be installed using swing pipe per installation details. Medium (3/4" bottom inlet) and large (1" or greater bottom inlet) rotor sprinklers shall be installed using swing joints as shown in the installation details. Swing joint size shall match sprinkler inlet size.

D. Bubblers, Tree Well, and Root Watering Systems: Installed per manufacturer's recommendations. Use only where and when specified.

20.02.11 DRIP IRRIGATION

A. Drip irrigation materials shall be as specified in the Irrigation Equipment Schedule.

B. Emitters shall be of the individual, self-cleaning, pressure-compensating type.

C. Dripline tubing shall be constructed of high quality linear, low density, UV-resistant, polyethylene resin materials with internal, integral emitters at specified intervals.

D. All insert barbed fittings shall be constructed of molded, UV-resistant plastic. Each fitting shall have a minimum of two (2) ridges or barbs per outlet. All fittings shall be from the manufacturer and shall be available in one of the following end configurations:
   1. Barbed insert fittings.
   2. Male pipe threads (MPT) with barbed insert fittings
   3. Female pipe threads (FPT) with barbed insert fittings.

E. Each drip remote control valve assembly shall contain the following components (in required sequence):
   1. PVC ball valve.
   2. Inline disc or screen filter with 100 micron/150 mesh filter element.
   3. Remote control valve.
   4. Inline pressure regulator.

F. Provide the following equipment to each drip valve circuit, located and installed per manufacturer's recommendations:
   1. Line flushing valve(s) - minimum of one (1) on each exhaust header, and one (1) on each supply header.
   2. Air/Vacuum relief valve(s) at all high points in the system if required by the manufacturer.

20.02.12 FLOW SENSING EQUIPMENT

A. Where specified, each controller shall be installed with its own corresponding flow sensor on a single point of connection to the water source.

B. The flow sensor shall be compatible with the specified controller.

C. Size the flow sensor so that it is able to read the high and low flows of the valves used on that particular controller. Install per manufacturer's specifications.

PART 3 EXECUTION

20.03.01 GENERAL

A. The irrigation plan is diagrammatic in nature, and some drafting liberties have been taken to maintain the graphic clarity of the drawings. All irrigation equipment shall be located in planting areas only, unless noted otherwise. The Contractor shall install piping to minimize changes in direction, avoid placement under large trees or large shrubs, and avoid placement under hardscape features. Refer to the irrigation legend, details, and specifications for equipment and proper installation.

B. Site Visit: The Contractor shall visit and inspect the project site. He shall take into consideration known and reasonably inferable conditions affecting the proposed work. Failure to visit the site shall not relieve the Contractor of furnishing materials and performing the work required. Any discrepancies between existing site conditions and those indicated on the plans shall be called to the attention of the Owner prior to continuance of the project.

C. The Contractor shall keep the premises clean and free of excess equipment, materials, and rubbish incidental to work of this project. Work areas shall be swept clean and trash and debris picked up daily. Open trenches or hazards shall be protected with yellow caution tape. The Contractor is

responsible for removal and legal disposal (off site) of trash and debris generated by his work on this project.

D. Existing Landscapes:
   1. Where existing landscape areas are a part of the project, the Contractor shall repair or replace work damaged by his irrigation system installation at his own expense. If the damaged work is new, the Contractor or the original installer of that work shall perform repairs at the Contractor's expense. The existing landscape shall remain in place, protected and undisturbed.
   2. The Contractor shall protect and work around all existing plant materials designated to remain.
   3. Coordination of trench and valve locations shall be laid out prior to any excavation work. Plant material deemed by the Landscape Architect to be damaged by the Contractor shall be replaced with new plant material at the Contractor's expense. The Contractor shall not cut existing tree roots larger than two (2) inches in diameter. Route pipe, wire, and irrigation components around tree canopy drip lines where possible to minimize damage to tree roots.
   4. The Contractor shall leave no part of the existing landscape without water for more than forty eight (48) hours at a time.

E. Pre-Construction Meeting: A pre-construction shall be held prior to beginning any work on a project. The Owner, the project designer, and the Contractor and his Sub-contractors shall all be in attendance.
   1. The purpose of this meeting is to review project goals and expectations, the project schedule, and all procedures relative to inspections, permits, and changes that may arise.
   2. In the pre-construction meeting, it shall be made clear that the construction documents (plans, details, specifications, and contract) shall be binding upon the Contractor and upon all of his work. Any work not in accordance with the plans and specifications shall be rejected, and the Contractor shall bring the project into compliance at his own expense.

20.03.02 CONSTRUCTION STAKING

A. The Contractor shall provide the necessary staking to obtain the layout shown on the plans. The points of reference shall be as indicated in the drawings, and shall include such features as the existing walks, buildings, curbs, etc. The staking may be approved by the Landscape Architect prior to commencing installation operations. Any changes in the system which appear necessary due to field conditions must be called to the attention of the Landscape Architect and approved at the time they are discovered and prior to making any changes.

20.03.03 EXCAVATION AND BACKFILLING

A. Excavation:
   1. Excavation work shall be as deep and as wide as will be required to safely perform the work, such as making mainline connections or forming vaults.
   2. Trenches shall be deep and wide enough to provide working space for placing two (2) inches of bedding underneath all new mainline pipe and fittings where the soil is rocky or gravelly. Place eighteen (18) to thirty (30) inches of cover over the top of all pipe and fittings on main lines. All trench bottoms shall be sloped so that the pipes will gravity-drain back to the main connection point or the nearest manual drain. If the existing main line is deeper than thirty (30) inches, the Contractor shall install a riser to a depth of eighteen (18) to thirty (30) inches and then install the new line at the required depth. At no time will the mainline be installed with less than eighteen (18) inches or greater than thirty (30) inches of cover unless prior approval is given by the Landscape Architect.
   3. Trenches shall be deep enough to maintain twelve (12) to fourteen (14) inches of cover over the top of all lateral line pipe and fittings. They shall be deep enough to guarantee that all swing joints drain back to the lateral lines. Trenches shall be a minimum of twelve (12) inches away from any walks and/or curbs, buildings, or other hardscape improvements. They shall be of sufficient width to accommodate tees and other fittings that come out sideways (horizontally) from the lateral lines. Lateral lines may be pulled by a mechanical puller provided all other applicable specifications are met.
   4. Any rocks or other debris over one (1) inch in diameter uncovered during excavation or trenching shall be removed from the area.
   5. If more than one (1) pipe line is required in a single trench, that trench shall be deep and wide enough to allow for at least six (6) inches of horizontal separation (if both are lateral lines), or

six (6) inches of both horizontal and vertical separation (if one line is a main line) between pipes.

6. Any existing utility lines damaged during excavating or trenching shall be reported immediately to the Landscape Architect, the utility Owner, and the project Owner. After proper notification to the Landscape Architect, the utility Owner, and project Owner, repairs to the damaged utility shall be made immediately. Repair materials and methods shall meet industry standards and the utility Owner's satisfaction. Should utility lines be encountered which are not indicated on the plans, the Owner shall be notified. The repair of any damage shall be done as soon as possible by the Contractor or the utility Owner, and proper compensation to the Contractor shall be negotiated with the Owner. Such utility locations shall subsequently be noted on the "As-Built" drawings required before final payment of the irrigation system contract.
7. Where trenching is done in established lawn, care shall be taken to keep the trenches only as wide as is necessary to accomplish the work. The trenches shall be backfilled as specified and then four (4) inches of topsoil placed to bring the trench up to existing grade so that sod can be laid. Only new sod shall be used as trench cover. It shall be established new sod of standard width and shall be laid along the trenches so as to match the existing sod. No small pieces of sod shall be used and only standard lengths shall be accepted. No sod from the construction site shall be used unless otherwise specified. In the event of any backfill settlement prior to the end of the guarantee period, the Contractor shall perform the required repairs at his own expense.

B. Backfilling:

1. No backfilling of trenches shall be done until the system has been inspected and approved by the Landscape Architect for proper trench depths, installation of equipment, control wire, and location of heads.
2. Before trenches are backfilled, the Contractor must show the Landscape Architect the redlined "As-Built" drawing he has been keeping on the site, indicating that changes and corresponding dimensions have been recorded where such changes have been made.
3. Prior to backfilling, the system shall be tested under pressure for leaks and general operation of the equipment. The main line shall be tested for a period of four (4) hours at a pressure of 120 PSI. Any failures detected during the testing period shall be repaired by the Contractor and the testing shall be repeated. The Landscape Architect shall certify the testing to insure that it has been completed and that the system has met all testing requirements. All defects discovered by the pressurization and operation test shall be corrected by the Contractor at his own expense before proceeding with further work.
4. Trench bedding and backfill material shall be existing site soil free of rocks larger than one (1) inch in diameter and any other debris. Wasted pipe and other excess project materials or rubbish (tape, wire, trash, wrappers, boxes, bottles, etc.) shall not be backfilled into the trenches. All trenches shall be backfilled, and then watered sufficiently to insure no settling of the surface. In the event of any backfill settlement prior to the end of the guarantee period, the Contractor shall perform all required repairs at his own expense.
5. Backfill under and around the lines to the center line of the pipe shall be placed in maximum layers of six (6) inches and thoroughly compacted. Compaction shall be ninety five (95) percent relative density (modified proctor) under walks and roads, and eighty five (85) percent in planting areas.
6. Special care shall be taken to assure complete compaction under the haunches of the pipe. Backfill compaction under the haunches of the pipe shall be compacted to the original density. Compaction requirements above the pipe shall be the same as for surrounding areas.

20.03.04 POINT-OF-CONNECTION

A. The Contractor shall verify the location of the irrigation point-of-connection (P.O.C.) and the static water pressure at that location prior to beginning any irrigation work. Verify water pressure during the time of day that the irrigation system is intended to operate.

B. If the P.O.C. location or water pressure is different than that expressed by the irrigation designer, or if the pressure appears to be unusually high or low, the Contractor shall notify the Landscape Architect immediately.

20.03.05 ELECTRICAL POWER SUPPLY

A. If 120 volt ac electrical service is not already in place, the Contractor shall be required to make all necessary arrangements with the appropriate power company and perform all necessary materials

and labor to provide said power, including but not limited to: paying fees, making power connections, providing poles, weatherhead and meter, etc., as specified on the plans or as required by the power company and the Owner. The exact location of the automatic controller which shall receive the power shall be determined by the Landscape Architect and the Owner

20.03.06 PIPE AND FITTINGS

A. Install pipe to allow for expansion and contraction as recommended by pipe manufacturer. Where the main line will be allowed to sit uncovered for any length of time in the trench prior to testing, shade the main line with a thin covering of backfill soil to minimize weather-related expansion or contraction of the pipe. Do not cover up valves or other installed equipment prior to inspection and acceptance.

B. The ends of all pipe shall be cut squarely, and remain free of all inside scale or burrs. Spigot ends of pipes three (3) inches and larger shall be beveled. Threads shall be cut clean and sharp, and to a length equal to one and one eighth (1-1/8) times the length of the female thread receiving the pipe. The threaded pipe shall be screwed into a full length of the female thread.

C. All threaded pipe joints shall be properly sealed using Teflon tape that is properly applied to the areas to be joined.

D. Solvent weld joints shall not be glued unless ambient temperatures are at least forty (40) degrees F. Pipe shall not be glued in rainy conditions unless properly tented. Use only the brand and type of primer and glue specified. Glued main line pipe shall cure a minimum of four (4) hours prior to being energized. Lateral lines shall cure a minimum of two (2) hours prior to being energized and shall not remain under constant pressure unless cured for twenty four (24) hours.

E. Every care shall be taken during installation to prevent dirt and debris (especially rocks and pipe shavings) from getting into the pipes.

F. All tees coming out of main lines for valves and other fixtures shall be vertical and constructed with Sch. 80 PVC pipe.

G. All tees coming out of the lateral lines for heads and other fixtures shall be horizontal so that no direct weight or pressure may be exerted through the head to the top or bottom of the lateral line pipe. Tees on lateral lines shall also be SxSxT to the head swing joints.

20.03.07 THRUST BLOCKS

A. Thrust blocks are needed wherever the main pipe line:
   1. Changes any direction at tees, angles, and crosses vertical and horizontal.
   2. Changes size at reducers.
   3. Stops at a dead-end.
   4. Valves at which thrust develops when closed.

   The size and type of thrust block depends on pressure, pipe size, type of soil, and type of fitting. As a general rule, one cubic foot (minimum) of class AA (AE) Type II concrete (2,000 psi minimum) is required for each thrust block. Follow the ductile iron fitting manufacturer's recommendations for the minimum thrust block size.

B. Thrust blocks shall rest against undisturbed original earth in the direction of thrust.

C. Where a fitting is used to make a vertical bend, use a three eights (3/8) inch bar to anchor the fitting to a thrust block braced against undisturbed soil. The thrust block should have enough resistance to withstand upward and outward thrusts at the fitting.

D. Where concrete thrust blocking shall come in contact with PVC pipe, wrap the PVC pipe with a layer of plastic to protect the pipe from any caustic effects that may be caused by the concrete mix.

E. Thrust restraining devices may be used in lieu of thrust blocking, but they must be installed strictly according to manufacturer's recommendations. Use of these devices in lieu of thrust blocking shall be approved by the Owner or Owner's Authorized Representative prior to use.

20.03.08 PIPE SLEEVES

A. Pipe sleeves shall be required for all piping under all new concrete or other new paving. The size of the sleeve shall be at least twice the size of the pipe or wires to be sleeved. Wires shall be sleeved separately within their own sleeve. All pipe sleeves four (4) inches and smaller in diameter shall be PVC Schedule 40 pipe; sleeves greater than four (4) inches in diameter shall be Class 200 PVC.

20.03.09 VALVES

A. General:

1. Isolation valves, remote control valves, and quick coupling valves shall be installed according to manufacturer's recommendations and these drawings and specifications.
2. Valve boxes shall be set over valves so that all parts of the respective valve assembly can be reached for service. Valve box and lid shall be set to be flush with the proposed finished grade.
3. No valve box shall rest directly upon the valve or any fixture associated with it, including main line and lateral lines. Each valve box shall be centered on the valve assembly it covers. Each valve box shall have four (4) inches of three quarter (3/4) inch gravel placed in the bottom underneath the valve and lines to reduce the potential of mud and standing water therein.

B. Remote Control Valve:
1. Each control valve shall have its own gate or ball valve (as specified), and only one (1) control valve and gate/ball valve per valve box. No valve manifolds shall be allowed.
2. The bottom of the remote control valve shall be a minimum of four (4) inches above the gravel.
3. All control valve assemblies shall be placed within planting areas and in the approximate location as shown on the plans. No large grouping of valves (greater than 3) in any one spot shall be allowed.
4. Control valve assemblies shall be installed no closer to one another then two (2) feet.
5. No control valve shall be installed more than twelve (12) inches below finished grade.
6. Tag each control valve with a permanent and non-smearing label indicating its proper controller and valve number as shown on the irrigation plans.

C. Quick Coupling Valve:
1. Quick coupling valves shall be installed within a ten (10) inch round valve box unless next to concrete pad. In the latter case, install at finished grade.

20.03.10 VALVE BOX

A. Where indicated in the installation details, valve boxes shall rest on concrete pavers only, thus eliminating any weight or pressure from being exerted on the main line or valve inside the valve box. There shall be a minimum of three (3) inches of clear space between the bottom of the valve box lid and the topmost part of the valve (including solenoid).

B. Valve box extensions shall be used where necessary to prevent soil around the valve from collapsing into the space inside the valve box.

20.03.11 BACKFLOW PREVENTION ASSEMBLY

A. The Contractor shall install backflow prevention equipment behind (downstream from) the point-of-connection to the supplying main and lateral lines. Installation shall comply with local, state, and national codes and regulations, and per manufacturer's recommendations (whichever is most restrictive). See plans and details for more information. Install a quick coupling valve just downstream of the backflow prevention assembly for system blowout purposes.

B. The Contractor shall have the backflow prevention assemblies operation tested within ten (10) days of the time of installation by a certified backflow preventer assembly tester. Testing shall be conducted per state requirements to insure proper and safe operation. Subsequent annual testing at spring start-up shall be the responsibility of the Owner.

20.03.12 FILTER & ENCLOSURE

A. The Contractor shall install the filter and its enclosure just downstream from the point-of-connection and upstream from the backflow prevention assembly (if present).

B. The filter shall be equipped with a ten (10) foot length of hose that can be attached to the exhaust port of the filter to direct water and debris away from the enclosure during flushing operations. Auto-flush filter models shall be provided with a permanent method of capturing and directing exhaust water away from the filter assembly without creating puddles, ponding, or any other nuisance drainage problems.

20.03.13 WIRE & CABLES

A. Multiple wires in the same trenches shall be banded together at ten (10) foot intervals for protection. Where wires pass under paved areas, they shall be installed in Schedule 40 PVC sleeves. These sleeves shall be installed prior to installation of the paving, if possible, and prior to installation of the wires. Sleeves for fourteen (14) gauge wires shall be sized as follows:

NUMBER OF WIRES	SLEEVE SIZE
1 - 10	1"

11 - 18.....1 1/4"
19 - 25.....1 1/2"
26 - 40.....2"
41 - 56.....2 ½"
57 - 88.....3"
89 - 150.....4"

B. All control wires shall be bundled and taped together every ten (10) feet and installed in the pipe trench directly adjacent to the pipe. Control wires not placed in the trenches adjacent to the pipes shall be placed in PVC electrical conduit and buried eighteen (18) inches or deeper and marked on the "as built" drawings.

C. Two (2) spare wires shall be run from each controller to the farthest valve under its control in all directions and to any valve which is on a dead-end line. The spare wires shall be a different color from the regular wires and shall be labeled at both ends. Each spare wire shall be brought up to the surface in each valve box it passes through and coiled with twenty four (24) inches for use in future connections. Each spare wire shall be tested for continuity prior to final acceptance of the project and guaranteed by the Contractor to be functional. Should the maintenance personnel discover a defect within one (1) year afterwards, the Contractor shall locate the problem and cause it to be repaired at his own cost. Install extra wires as needed for moisture sensors.

D. Run a single 14 gauge wire along the top of the main line to be used for tracking the location of the main line. The color of the tracing wire shall be different than any other wire color used.

E. All wires shall be installed with twenty four (24) inches of excess wire (coiled) at the end of each wire run, wire splice, and at each controller.

F. Isolation valves, quick coupling valves, manual drain valves, and wire splices not specifically associated with the control valve shall be located in separate valve boxes.

20.03.14 SPRINKLERS

A. General:

1. All sprinkler heads shall be installed above grade so as to minimize washing of the topsoil and seed during the landscaping establishment period, except those which border paving or flat work of any kind. These heads shall be installed at the finished grade of the adjacent paving or flat work. Prior to final acceptance of the project, all heads shall be raised or lowered to final lawn or planting grade.
2. All sprinkler heads shall be installed using the bottom inlet. No side outlets shall be used.
3. Rotor heads located on hillsides shall be adjusted to the downhill side to avoid cutting into the hill by the stream of water and causing erosion.
4. Heads installed in existing sod shall be set at the grade of the soil.
5. All rotary pop-up heads shall be installed at final grade on double swing joints. All swing joints must drain by gravity back to the supply lines.
6. All pop-up, shrub spray/rotary, turf spray/rotary, bubbler and strip spray/rotary heads shall be installed as shown in the details.
7. All pipes, lines, and risers shall be flushed thoroughly with water before installation of any heads. All debris and rocks found at that time shall be removed from the area as soon as possible.
8. All spray sprinklers shall be flushed thoroughly with clean water a second time before installation of nozzles.
9. The Contractor shall adjust all heads to provide a uniform coverage and to keep spray off buildings, walkways, walls, parking areas, and drives.
10. Check valves shall be used where indicated and where necessary to prevent water flow from lower elevation heads when system is turned off. Install per manufacturer's recommendations.

B. Inline Drippers

1. Inline drip tubing shall be spaced at a distance equal to or less than the inline emitter spacing. For slope applications, place drip tubing laterals parallel to the slope contour. When slopes exceed thirty (30) percent, increase the recommended lateral spacing by twenty five (25) percent on the lower one third (1/3) of the slope.
2. Inline dripper tubing shall be installed at finished grade with soil staples and covered with three (3) inches of specified mulch. Supply and exhaust headers shall be installed at normal lateral line depths.
3. All drip tubing shall be held in place by soil staples and shall conform to the following:

a. Sandy Soil - One staple per every three (3) feet and two (2) staples on each change of direction (tee, elbow, or cross)
b. Loam Soil - One staple every four (4) feet and two (2) staples on each change of direction (tee, elbow, or cross)
c. Clay Soil - One staple every five (5) feet and two (2) staples on each change of direction (tee, elbow, or cross)

4. Installation of inline drip circuits shall generally conform to the following steps:
   a. Assemble and install ball valve, filter, remote control valve and pressure regulating valve assembly in accordance with installation details.
   b. Assemble and install supply header(s) in accordance with installation details. Tape or plug all open connections to prevent debris contamination.
   c. Install lateral drip lines in accordance with details and relevant specifications and manufacturer's recommendations. Tape or plug all open ends while installing to prevent debris contamination.
   d. Assemble and install exhaust header(s) in accordance with installation details. Tape or plug all open connections to prevent debris contamination.
   e. Install air/vacuum relief valve(s) at the zone's highest point(s) in accordance with installation details.
   f. Thoroughly flush supply header(s) and connect drip lateral lines while flushing.
   g. Thoroughly flush drip lateral lines and connect to exhaust header(s) and any interconnecting lateral lines while flushing.
   h. Thoroughly flush exhaust header(s) and install line flushing valves in accordance with details.

20.03.15 AS-BUILT DOCUMENTS

A. The Contractor shall keep a current and accurate record of exact dimensioned locations, grades, elevations, and the size of all exterior and interior underground piping, valves, and drains. Dimensions shall indicate distances from columns, buildings, curbs, and similar permanent features on the site. This information shall be recorded on a print as the work progresses, but shall be permanently recorded on a reproducible two (2) mil mylar or Tyvek original which shall be given to the Owner before the project is accepted. The mylar or Tyvek shall be a copy of the original plans for the project produced by a local printer at the Contractor's expense.

B. Final payment for the contract will not be processed until "As-Built" drawings or plans are received by the Owner.

20.03.16 OPERATIONAL TEST AND MAJOR INSPECTIONS

A. Substantial Completion:
   1. At substantial completion of the irrigation system, the Contractor shall call for an operational and coverage test. Substantial completion shall be defined as the complete installation of all irrigation equipment and completion of all backfilling and grading operations in their entirety. Substantial completion shall not be given for designated portions of the project.
   2. Notice by the Contractor shall be given, in writing, at least three (3) days in advance to the Owner so that proper scheduling can be made for those who are to attend.
   3. At the appointed time, an inspection of all irrigation equipment, including control valve assemblies, controllers, isolation valves, quick coupling valves, drain valves, and sprinklers shall be made. The entire system will be tested for operation, coverage, and head adjustment. Please note that the pressure testing of the main lines and lateral lines shall already have been completed prior to this time.
   4. A list of uncompleted items or repairs (punch list) shall be generated by the Owner and distributed to the Contractor and other involved parties within three (3) days of the operational testing. Each item on the punch list shall be corrected before the system will be approved and accepted by the Owner. The Contractor will be back charged for time spent by the Owner and any consultants who have been brought to the site for a final inspection when the project is not ready for said inspection.

B. Maintenance/Establishment Period:
   1. The duration of the irrigation maintenance period shall be equal to the plant maintenance/establishment period. It shall begin one (1) day after the substantial completion

inspection. The Contractor shall complete all punch list items during the maintenance period, as well as maintain and operate the entire irrigation system.

2. The irrigation Contractor (if different than the landscaping Contractor) shall coordinate with the landscaping Contractor during the entire plant and lawn establishment period on the use, scheduling, and maintenance of the sprinkler system.

C. Final Acceptance:

1. A second inspection shall be held at the end of the maintenance period to insure that all punch list items have been completed and the entire system is ready for acceptance by the Owner.
2. Upon satisfaction that the Contractor has completed all punch list items, the irrigation system is fully and completely functional, and the required As-Built drawings, mylars and maintenance manuals have been submitted, the Owner shall accept the project.
3. An official letter of final acceptance shall be prepared and issued to the Contractor, Landscape Architect, and the Owner. Upon acceptance of the system by the Owner, the Owner shall assume full responsibility for the system, and the guarantee period shall begin.

20.03.17 GUARANTEE AND MAINTENANCE

A. Guarantee:

1. Upon final acceptance of the irrigation system as being operational and properly installed, the Contractor shall guarantee the workmanship, materials, fixtures, and equipment to be free from defects for a period of one (1) year after that date.
2. The Contractor shall insure and guarantee complete drainage of the system. In working with or connecting to an existing system, the Contractor shall guarantee compatibility in operation and drainage between the two systems.

B. Maintenance Required During Guarantee Period:

1. In the fall of the year during the installation and guarantee period, the CONTRCTOR shall meet with the Owner's maintenance personnel on the site. The Contractor shall winterize the system by draining all of the water and doing everything necessary to insure protection of the system until spring. Blowing out the lines by compressor shall be permitted during the one (1) year guarantee. Maximum compressor pressure shall be 30 psi on spray circuits, 50 psi on rotor circuits, and 20 psi on all drip circuits. The individuals involved from both parties shall exchange all information necessary for the eventual take-over of the system by the Owner.
2. The Contractor, with the Owner's maintenance personnel and Owner in attendance, shall energize the sprinkler irrigation system again the following spring and shall repair all defects found as a result of winter damage, improper installation, improper maintenance, defective materials or inadequate sprinkler drainage.
3. At the end of the guarantee period, when the lawn and landscaping have been accepted, the Contractor shall call for a final inspection of the sprinkler irrigation system. There shall be at least five (5) days prior notice given in writing to the Owner so that the appropriate people have opportunity to attend.
4. Prior to that time, the Owner shall adjust all heads to their proper pattern, radii, and height. The system shall have been flushed out, checked for operation, and any defects not covered by the guarantee corrected shall be repaired. The entire system shall be inspected and checked to determine if everything is in working order. A final list of warranty items found in need of correction (if any) shall be made and the Contractor shall correct them. The Contractor shall notify the Owner when he has verified that every item is corrected.
5. After all warranty items have been corrected, the Owner shall, in writing, officially release the Contractor from all warranty claims pertaining to the irrigation system and assume full and complete responsibility for said system.

DIVISION 21: PLANTING

PART 1 GENERAL

21.01.01 SUMMARY

A. Section includes:
   1. Trees, shrubs, perennials, vines, and groundcover requirements.
   2. Bedding, topsoil, and temporary support.

B. The work to be performed under this section shall consist of furnishing all materials, labor, and plants necessary for the proper planting or all trees, shrubs, perennials, vines, and groundcovers of the kind and sizes specified at the prescribed locations, and otherwise in accordance with the drawings and specifications or as directed by the Landscape Architect.

C. Related sections:
   1. Section 32 84 23 Underground Irrigation Systems

21.01.02 REFERENCES

A. ANN: American Associations of Nurserymen, Inc.

B. ANSI Z60.1: American Standard for Nursery Stock.

C. FS O-F-241: Fertilizers, Mixed Commercial.

21.01.03 QUALITY ASSURANCE

A. Perform work in conformity with applicable requirements of AAN.

B. Upon receiving Notice to Proceed, the Contractor shall provide written proof that the specified plant material is available and has been secured or reserved specifically for this project. Obtain nursery stock and other plant materials from reliable and stable sources prior to order and delivery.

C. Provide plants that are declared free of disease and insect pests.

21.01.04 PRODUCT DELIVERY, STORAGE, AND HANDLING

A. Exercise care in digging, transporting, handling, and packing of all plants.

B. Handle plants so roots are protected at all times. If delivery is in open vehicles, cover entire load without causing over heating.

C. Deliver plant material immediately prior to placement. Keep plant material moist.

D. Protect root balls from sun and wind by covering with soil or other suitable material if not planted immediately on delivery.

E. Store fertilizer in a weatherproof location such that its effectiveness will not be impaired.

21.01.05 ACCEPTANCE

A. Plants shall be accepted if the ball of earth surrounding roots (rootball) has not been cracked or broken.

B. Plants shall be accepted if burlap, staves, and ropes required in connection with transplanting are installed and still intact upon delivery.

C. Heeled in stock from cold storage shall not be accepted.

21.01.06 SAMPLES

A. Samples of the materials listed below shall be submitted to the Landscape Architect for inspection and approval prior to the beginning of work under this contract.

B. Delivery of materials may begin only after samples have been approved. All materials furnished for the work shall conform in every respect to the approved samples. Any non-conforming materials will be rejected.

PART 2 PRODUCTS

21.02.01 GENERAL

A. The planting plan is diagrammatic, and all plant locations are approximate. Plant symbols take precedence over plant quantities shown on the plans and in the plant material schedule. The Contractor shall verify all plant quantities and notify the Landscape Architect of any discrepancies between the quantities and the symbols shown.

B. Provide plants of normal growth and uniform height, according to species, with straight canes and well developed leaders, roots, and tops.
C. Provide plants of sizes indicated. The size stated in each case shall be interpreted to mean dimensions of plant as it stands in its mature position in the nursery without straightening of any branches or leaders.
D. Provide legible labels attached to all plants, specimens, bundles, boxes, bales, or other containers indicating botanical genus, species, and size of each.
E. Plants cut back from larger sizes to meet specifications shall be rejected.
F. Balled and burlapped deciduous shrubs may be acceptable in lieu of container growth deciduous shrubs only if there is a demonstrated significant shortage of container grown stock.

21.02.02 PLANTS

A. All plants shall comply with federal and state laws requiring inspection for plant disease and infestations.
B. Any inspection certificates required by law shall accompany each delivery of plants and such certificate shall be given to the Landscape Architect. All plants shall be subject to inspection and approval at the place of growth or upon delivery to the site for their quality, size, species, and variety. Such approval shall not impair the right of inspection and rejection at the site or during progress of work for size and condition of the plants, latent defects, or injuries. Any and all rejected plants shall be removed immediately from the premises by the Contractor. The Contractor shall make all replacements at his expense should he fail to comply in full with any of the specifications. Necessary replacements will be made as soon as weather conditions permit and all such plants replaced shall conform to all specifications herein.
C. Names and Grades:
   1. Plant names shall conform to the nomenclature of "Standard Plant Names" or "Bailey's Encyclopedia of Horticulture." When a name is not found in either reference, consult the accepted name used in the nursery trade. All plants shall be tagged by the nursery with the proper identification labels to insure the correct varieties of plants.
   2. Size and grading standards shall conform to those of the American Association of Nurserymen, Inc., as published in "American Standard for Nursery Stock", 1959 Edition, with all current revisions unless otherwise specified.
   3. The caliper of trees shall be measured six (6) inches above the surface of the ground.
   4. Measurements on all trees and shrubs shall be taken with the branches in a normal position. Height and spread dimensions specified refer to the main body of the plant and not from branch or root tip to tip. No trees which have had their leaders cut or so damaged that cutting is necessary, will be accepted.
D. No substitution of size, grade, variety or any species shall be permitted except by written permission of the Landscape Architect.
E. Plant Size:
   1. All plants shall conform to the size, age, and condition as specified in the plant list shown on the drawings. Undersized plant material shall not be approved.
   2. No additional compensation shall be due the Contractor if larger than specified plant material is provided.
   3. Due to the large size of the trees and evergreens being specified, only balled and burlapped or container stock shall be accepted. No bare root stock shall be accepted.
F. Plant List:
   1. Plants lists indicate minimum size requirements only. Plant materials shall be equal to or greater in size than those specified.
   2. Any discrepancies between plant lists and plans shall be immediately brought to the attention of the Landscape Architect.
   3. In all cases the Contractor shall be held responsible for all plant materials indicated on the plans unless otherwise directed in writing by the Landscape Architect.
   4. Each bidder shall investigate sources of supply and satisfy himself that he can supply all of the plants mentioned in the planting lists in size, variety, and quantity noted and specified before submitted his bid. Failure to take this precaution will not relieve the successful bidder from his responsibility as Contractor to furnish and install all plant material in strict accordance with the contract requirements without additional expense to the owner.

G. All plants shall be fresh and vigorous, of normal habit and growth, and free of disease, insects and insect eggs and insect larvae, weeds and weed seed. No heeled-in plants from cold storage shall be accepted except on approval by the Landscape Architect prior to installation.

21.02.03 TREE STAKES & TIES

A. Tree stakes shall be two by two (2x2) inch square or two (2) inch diameter round wood stakes eight (8) feet in length as indicated on the plans. Steel stakes may be used if approved by the Landscape Architect and reclaimed after one year.

B. Tree stake ties shall be manufactured of virgin flexible vinyl meetings ASTM-D-412 standards for tensile and elongation strength. The material shall be black in color for ultraviolet resistance. Hose and wire shall not be used.

21.02.04 TOPSOIL

A. All planting areas shall receive either a minimum of four (4) inches of stockpiled or imported topsoil in turf areas and twelve (12) inches in planting beds.

B. All topsoil used on this project (stockpiled or import) shall meet the following criteria:

1. pH: .....5.5 - 8.0
2. EC (electrical conductivity):.....<2.0 mmhos per centimeter
3. SAR (sodium absorption ratio):.....<3.0
4. % OM (percent organic matter):.....≥2%
5. Texture (particle size per USDA classification):
   a. Sand: .....<70%
   b. Clay: .....<30%
   c. Silt:.....Balance
6. Stone Fragments (gravels or any soil particle greater than two (2) mm in size):.....<5% (by volume)
7. Rocks Present > 1.5”.....None

C. In addition, the topsoil shall be fertile, friable, natural loam and shall be capable of sustaining vigorous plant growth. It shall be free of stones, lumps, clods of hard earth, plants or their roots, sticks, and other extraneous matter. The topsoil shall contain neither noxious weeds nor their seeds. It shall not be used for planting operations while in a frozen or muddy condition.

21.02.05 WEED BARRIER FABRIC

A. A weed barrier fabric shall be placed in all planting beds to prevent the growth and spread of unwanted weeds. The fabric shall be Type #3301B or approved equal.

21.02.06 MULCH

A. Shredded bark mulch shall be used as a top dressing for all planting beds unless specified otherwise.

B. Shredded bark mulch shall conform to the following criteria:

1. Bark pieces shall not exceed two (2) inches when passed through a screen of that size.
2. Large chunks of bark or wood shall not be mixed in with the mulch.
3. The bark mulch shall be primarily from coniferous trees.

C. Where used, the shredded bark mulch shall be place to a depth of three (3) inches on top of the topsoil.

D. Other mulches may be used only as specified on the drawings or in the planting notes and details.

21.02.07 FERTILIZER

A. Commercial fertilizer shall be uniform in composition, dry, and free flowing. Deliver fertilizer mixed as specified in bulk or bag, showing weight analysis, formula, and manufacturer’s name.

B. A 16-16-16 balanced fertilizer shall be used. Any exceptions to this formula shall be based on horticultural recommendations resulting from a site-specific soils test, and must be approved prior to application by the Landscape Architect.

21.02.08 MOWSTRIP

A. Where turf areas are separated from planting beds, a concrete mowstrip shall be used. No other edging materials may be used unless specifically noted on the plans and approved by the Landscape Architect.

B. The mowstrip shall constructed using concrete having a compressive strength rating of two thousand five hundred pounds per square inch (2,500 psi) or greater, and a maximum slump of four (4) inches.

C. A three eighth (3/8) inch diameter rebar (#3) shall be placed continuously in the center of the mowstrip to provide support and help prevent differential settling of the mowstrip after cracking. Overlap joints a minimum of twelve (12) inches.

PART 3 EXECUTION

21.03.01 GENERAL

A. Site Visit: The Contractor shall visit and inspect the site. He shall take into consideration known and reasonably inferable conditions affecting work. Failure to visit the site will not relieve the Contractor of furnishing materials and performing the work required.

B. Prior to any planting operations, the irrigation system shall be fully operational and all planting areas shall be thoroughly moistened.

C. Where weeds or other undesirable vegetation are present in planting areas, the Contractor shall apply a contact herbicide a minimum of ten (10) days prior to commencement of any planting or irrigation work. Apply herbicide per manufacturer's recommendations. The poisoned vegetation shall be allowed to completely die back, including the roots, before proceeding with the work. Dead vegetation shall then be removed from the site and disposed of in a legal manner.

D. The Contractor shall conform to the following requirements with regard to existing vegetation:
   1. The Contractor shall be fully responsible for any damage to existing trees or shrubs. He shall use all reasonable means to protect and preserve plants on the project not designated for demolition.
   2. No pruning, thinning, or cutting of existing vegetation shall be allowed unless written permission is given by the Landscape Architect.
   3. The Contractor shall replace any trees or existing shrubs damaged by him or his sub-contractors with like kind and size.

21.03.02 PLANTING SEASONS

A. All new plant installation shall be completed between April 15 and October 15. If planting must be done after October 15 or before April 15, the Contractor shall obtain specific approval to do so from the Landscape Architect prior to beginning any planting operations.

B. No planting shall be done in frozen soil or during unfavorable weather conditions, subject to the approval of the Landscape Architect.

21.03.03 TOPSOIL

A. The Contractor shall obtain a soil analysis from any authorized soil testing agency of any existing stockpiled or imported topsoil to be used on the project to verify that it conforms to the topsoil specifications. Test results shall include horticultural recommendations. The soil samples shall be obtained per the testing agency directions. Allow ten (10) working days to obtain test results. The costs for such testing shall be the responsibility of the Contractor.

B. Prior to delivery of the imported topsoil to the site, the Contractor shall provide to the Landscape Architect the name and location of the topsoil source, along with the certified soil analysis of the topsoil to be used. The analysis shall verify that the proposed topsoil meets the topsoil specifications, and is capable of supporting healthy plant growth.

C. The following procedure shall be followed in placing all topsoil:
   1. All areas to receive topsoil which have a slope of less than ten (10) percent shall be cross-ripped to a depth of four (4) to six (6) inches.
   2. The subgrade material shall be rough graded to plus or minus one tenth (±0.1) foot of the final rough grade, which will allow the Contractor to achieve final finished grade through the placement of the topsoil.
   3. The surface of the subgrade shall be scarified to a depth of two (2) inches to provide a transition zone between the subgrade and the topsoil. Place the topsoil on the subgrade and fine grade to the final finished grade and topsoil depths as indicated on the drawings and in these specifications.
   4. Any required soil amendments (i.e. mulch, organic matter, etc.) shall be placed directly on the topsoil at the required rates and spread evenly over the planting area. The amendments shall

then be thoroughly blended into the topsoil to a depth of four (4) inches. Where only a dry, granular fertilizer is to be added, it may be applied to the surface and raked in during the fine grading procedures.

D. The Contractor shall maintain a minimum of two (2) percent drainage away from all buildings, structures, and walls. Finished grades shall be smoothed to eliminate puddling or standing water.

E. All finished grades shall be approved in writing by the Owner prior to installation of any plant materials.

21.03.04 PLANT CONDITION

A. All precautions customary in commercial landscape installation practice shall be taken in preparing plants for planting. Workmanship that fails to meet these minimum standards shall be rejected. All balled and burlapped plants shall have firm and natural balls of earth around their roots. No plant shall be planted if the rootball is cracked or broken, either before or during the process of planting. Loose, broken or manufactured rootballs shall be rejected.

B. All plants materials in five (5) gallon containers or larger shall have been established in that container for a period of not less than six (6) months and not more than two (2) years. Plant material shall not be root bound. They shall exhibit sound, healthy, and vigorous growth and be free from diseases and pests.

C. The Contractor shall have the Landscape Architect approve plant material size and quality prior to installation. Any plants which are not true to form, appear stressed or unhealthy, are infested with pests, infected with disease, or are undersized for their containers shall be rejected.

D. All plant material shall be planted as soon upon arrival on the premises as possible. If planting cannot be done immediately, the roots shall be protected from the sun and kept in a moist condition until the time of planting. Such protection may be provided by laying the plants on the north side of the building and covering the roots with wet straw.

E. If it is anticipated that planting will not be done for more than twenty-four (24) hours after the arrival of plants upon the premises, the balled and burlapped stock shall be heeled-in on the north side of a building and all roots completely covered with dirt which shall be wetted down frequently. Care will be taken in the handling of all ball and burlap materials so that the earth around the roots is disturbed as little as possible.

21.03.05 PLACEMENT OF PLANTS

A. Plants shall be generally located as indicated by the drawing. The Contractor shall stake out the location of all plants and planting areas with identified plant stakes, and no excavation shall commence until such locations have been approved by the Landscape Architect.

B. In the event that underground construction work or obstructions are encountered during excavation of the plant holes, alternate locations will be assigned and approved by the Landscape Architect.

C. Except for turf and groundcovers, plants shall not be placed within twenty four (24) inches of sprinkler heads.

D. The Contractor must locate and stake any sprinkling head or valve box within 10' feet of proposed tree location, and must establish the direction of the lateral or main irrigation line that serves the staked sprinkler head or valve box. This procedure will help eliminate hitting underground irrigation pipes.

21.03.06 PLANT INSTALLATION

A. All concrete work, sprinkling systems, and finished grading shall be completed and approved by the Landscape Architect before any planting of the specified plant materials is begun.

B. No tree planting shall be initiated until sprinkling system is complete and tested. However, tree planting shall precede lawn planting.

C. Each plant will be placed in an individual plant pit. The sharing of pits shall not be allowed.

D. All trees and shrubs shall be planted in pits as detailed in the planting details contained herein or as noted on the drawings. Tree and shrub pits shall be circular in outline, with a diameter at least two (2) times the diameter of the rootball of each plant to be installed. They shall be one to two and one half (1 - 2 ½) inches shallower than the rootball depth. When the plant is properly placed in the plant pit, the root collar shall be approximately one (1) inch above finished grade. The sides of the plant pit shall be roughened, and not smooth or sculpted.

E. Plant backfill mix shall be one hundred (100) percent native site soil.

F. For container grown plants, remove the container and place the plant vertically in the plant pit, directly on undisturbed soil. The root crown or collar shall be at or just above the finished grade. Perennial and Ornamental Grass plants shall be planted with the root collar at finished grade.

G. For balled and burlapped plants, place the plant vertically in the center of the pit, with the rootball resting on undisturbed soil. Cut and remove the wire basket and burlap or other wrapping material from the rootball. This may be done with the rootball in the pit. Any burlap or wire pieces underneath the rootball may be left in place if they cannot be removed. Do not fold the burlap over, but cut away as much as possible without disturbing the rootball. No burlap shall be pulled from under the rootball. Backfill the bottom one third (1/3) of the pit as the wire and burlap are removed. In all cases, maintain the integrity of the rootball.

H. Specified backfill material shall be carefully and firmly worked and tamped under and around the rootball to fill all voids. When backfilled and compacted to two thirds (2/3) the depth of the pit, thoroughly water with a hose to completely soak the roots and remove any air pockets.

I. The plant pit shall then be completely backfilled with the specified backfill mix and tamped well. A shallow watering basin or rain cup shall be formed around each plant. This basin will be equal in diameter to that of the original planting pit.

J. Monitor all plants to insure that no settling occurs. Pits which settle shall be immediately filled with additional soil mixture at no additional expense to the City.

K. After planting, the following operations shall be performed:
   1. Stake and mulch all trees per installation details.
   2. Remove all nursery stakes ties, and tags from all plants. Prune and remove any dead, damaged, or broken branches. Maintain side growth on all trees.

21.03.07 STAKING

A. All trees, including evergreen trees, shall be staked.

B. Staking shall be performed as follows:
   1. Two (2) 2"x 2" square or 2" diameter round wood stakes, eight (8) feet in length, shall be used to support each tree planted under this contract unless otherwise indicated.
   2. Tree ties shall conform to the staking detail shown on the planting detail sheet.
   3. Each stake will be located adjacent to the rootball, on opposing sides, to provide maximum support to the trunk. Do not penetrate the rootball with the stake.
   4. The stakes will be driven into the pit bottom after the tree has been placed in the pit, but before backfilling begins so as to avoid damage to the roots.

C. Stakes and ties shall be removed after one (1) full growing season from the time the tree was installed.

21.03.08 WATERING

A. All plants shall be thoroughly watered immediately after planting. This shall mean full and thorough saturation of all backfill in the pits and beds during the same day of planting. Water shall be applied only by open end hose at very low pressure to avoid creating air pockets, causing injury to the plant, or washing away of backfill. When installed, watered, and fully settled, the plants shall be vertical.

B. Subsequent watering shall be provided by the site's irrigation system. The Contractor shall insure that all plants, especially trees, receive sufficient water to maintain healthy growth and vigor. Overwatering shall be avoided, and prolonged saturation of the soil around the trees shall be eliminated by appropriately controlling the irrigation circuit which provides water to that area.

21.03.09 WEED BARRIER FABRIC

A. Prepare final grade prior to placing fabric. Placement of fabric shall comply with the following:
   1. Place pre-emergent herbicide prior to installing fabric.
   2. Install fabric directly on topsoil. With drip tubing, install tubing on top of fabric.
   3. Overlap and secure per manufacture's recommendations.
   4. Cut an "X" where plant will be located. Peel back corners to allow plant installation. Fold corners back when plant is installed.

21.03.10 MULCHING

A. Shredded bark mulch shall be placed to a depth of three (3) inches on top of the topsoil in all planting beds and over tree planting pits.

B. The finished grade of the bark mulch shall be as follows:

1. Two (2) inches below the surface or finished grade of any paving, mowstrips, or walks adjacent to the planting area.
2. At adjacent finished grade of the turf surrounding tree planting pits.

C. In tree pits, the bark shall be kept six (6) inches away from the base of the tree.

D. Just prior to placement of the mulch, the Contractor shall treat the mulched areas with a pre-emergent herbicide according to the manufacturer's recommendations.

21.03.11 SOD INSTALLATION

A. Sod shall be obtained only from approved sources. The sod shall have been mowed regularly and carefully maintained from planting to harvest.

B. The sod shall be free of grassy and broad-leaf weeds, contain no bare or burned spots, and be clean and strongly rooted. It shall be of the varieties noted on the plans and notes.

C. The sod shall be cut using approved methods and equipment. It shall be cut in pieces not exceeding one (1) square yard, with a minimum of one (1) inch and maximum one and one half (1 ½) inch thickness. For very large turf areas and all athletic fields, large roles of sod shall be used. Sod shall be placed using equipment specifically designed to lay large sod roles.

D. The Contractor shall notify the Landscape Architect of the source of the sod prior to placement. The sod shall be stripped and delivered to the site not more than twenty four (24) hours prior to laying. The sod shall be maintained in a moist and healthy condition to encourage immediate growth.

E. The following procedure shall be followed when installing the sod:
1. Lay the sod on smooth, moist topsoil, working off planks if required.
2. Rake the topsoil to loosen and level prior to placing each course of sod.
3. Lay strips perpendicular to the direction of the slope. Strips shall be parallel to each other, with their end seams staggered. The sod shall be neither stretched nor overlapped, and all joints shall be butted tightly together.
4. Roll the sod immediately after placing and thoroughly water with a fine spray to a depth sufficient that the underside of the new sod and the soil immediately below the sod are thoroughly wet.
5. On slopes two (2) horizontal to one (1) vertical or steeper, lay the sod perpendicular to the slope and secure every row with wooden pegs at two (2) feet maximum on center. Drive the pegs flush with the soil portion of the sod.

21.03.12 HYDROSEEDING

A. General:
1. Wood fiber mulch shall be virgin wood fiber, free of growth- or germination- inhibiting substances. The mulch shall be air dried with not more than fifteen (15) percent moisture by weight. The total organic weight shall be a minimum of ninety eight (98) percent. Inorganic ash content shall be 0.7±0.2 percent. Water holding capacity shall be 1000G/100G (oven dried weight). The pH range shall be 4.0 - 6.0. The fiber length shall meet the following:
   a. Fifty (50) percent shall be at least 0.15 inches in length or longer.
   b. Fifty (50) percent shall be retained on the twenty eight (28) mesh screen.

   It shall be Echofiber or Conwed or approved equal.
2. The seed mix shall be as specified on the plans. Provide written certification that the seed conforms to Utah seed law and is in compliance with Utah State Department of Agriculture regulations.
3. The tackifier shall be M-Binder or Plantego or equal.
4. Application rates shall be as follows:
   a. Wood fiber mulch.....50 pounds (min.)/1,000 SF
   b. Seed mix.....See plans (7 pounds/1,000 SF typ.)
   c. Tackifier.....100 pounds/Acre
   d. Fertilizer.....7 - 8 pounds/1,000 SF
   d. Water.....92 gallons/1,000 SF

B. One-step preparation and application of hydroseed mulch shall be as follows:
1. The wood fiber mulch, seed, tackifier, fertilizer, and water shall be mixed together in a hydroseeding machine having a capacity of at least two thousand (2,000) gallons to allow for homogeneous slurry which is thoroughly mixed and can be applied easily without clogging. The machine shall be mounted on a traveling unit which is either self-propelled or drawn by a separate unit. Equipment used in the hydroseeding process shall be thoroughly cleaned of all

seed and other materials used in any previous hydroseeding process, prior to hydroseeding on this project.

2. The equipment shall have a built in agitation system and operating capacity sufficient to agitate, suspend, and homogeneously mix slurry containing not less than fifty (50) pounds of organic mulching amendment plus chemical additives and solids for each one hundred (100) gallons of water.
3. The slurry shall be prepared at the site and its components shall be mixed to supply the rates of application as specified. The slurry preparation shall begin by adding water to the tank when the engine is at one half (½) throttle. The engine throttle shall be open to full speed when the tank is one half (½) filled with water. All organic amendments, fiber, and chemicals shall then be added by the time the tank is two thirds (2/3) to three fourths (3/4) full. At this time and not before, the seed mix shall also be added. Spraying shall commence immediately when the tank is full and the slurry is mixed.
4. Apply the hydroseed to form even appearing cover over the required areas. The slurry shall be applied in a downward drilling motion via a fan stream nozzle. It is important to ensure that all of the components enter and mix with the soil. Use only qualified and trained personnel to insure uniformity of the hydroseed applications.
5. The hydroseeding slurry components shall not be left in the hydroseed machine for more than two (2) hours in order to avoid seed deterioration.

C. A two-step hydroseeding procedure may be used in lieu of the one-step method. The two-step procedure shall consist of first sowing the seed mix by broadcasting, and second, applying the hydromulch. Specifically, this procedure shall conform to the following:

1. The seed shall be broadcast over the planting bed at the rates noted in the plant schedule. The seed shall be sown in two (2) perpendicular directions with a cyclone seeder or other similar mechanical seeder. Lightly rake the seed into the soil.
2. Apply a fine spray watering immediately after each area has been sown.
3. Prepare and apply hydromulch slurry (minus the seed mix) according to the procedure outlined in 3.11 B, steps 1 through 5 above.

21.03.13 CLEAN UP

A. Throughout the course of planting, excess and waste materials as well as excavated subsoil shall be continuously and promptly removed. All areas shall be kept clear and all reasonable precautions taken to avoid damage to existing structures, plants, and grass.

B. When planting has been completed in an area, it shall be thoroughly cleaned of all debris, rubbish, subsoil, and waste materials. These shall be removed from the property and disposed of legally. All planting tools shall also be put away.

C. The ground surface shall be left in a condition satisfactory to the Landscape Architect.

21.03.14 AS-BUILT DOCUMENTS

A. The Contractor shall keep a record of all departures from the working drawings that occur during construction. These changes shall be shown on a clean set of prints, and the prints kept on the job site at all times for review.

B. As a part of his observation work, the Landscape Architect shall review the as-built drawings regularly to verify that changes are being recorded. At the conclusion of the work, the Contractor shall present the drawings to the Landscape Architect and they shall become part of the permanent record of the project.

21.03.15 MAINTENANCE

A. Substantial Completion:

1. At substantial completion of all planting work outlined in these plans, the Contractor shall contact the City to arrange for a walk through to verify that all aspects of the work have been completed. Work must be fully completed (except for final clean-up) according to all plans, notes, and specifications and exhibit professional workmanship. Substantial completion shall be defined as the complete installation of all plant materials, staking, mulching, and other work on the project in its entirety. Substantial completion shall not be given on designated portions of the project.
2. Notice by the Contractor shall be given, in writing, at least three (3) days in advance to the Landscape Architect so that proper scheduling can be made for those who are to attend.

3. At the appointed time, an inspection of all plant materials, including staking and mulching, shall be made.
4. A list of uncompleted items (punch list) shall be generated by the Landscape Architect and distributed to the Contractor and other involved parties within three (3) days of the substantial completion inspection. Each item on the punch list shall be corrected before the project will be approved and accepted by the Landscape Architect. The Contractor will be back charged for time spent by the Owner and any consultants who have been brought to the site for a final inspection when the project is not ready for said inspection.

B. Maintenance/Establishment Period:
1. The maintenance/establishment period shall begin one (1) day after the substantial completion inspection. The Contractor shall complete all punch list items during this period, as well as maintain and operate the entire irrigation system.
2. In cases where the maintenance/establishment period runs beyond October 15 of any given year, the balance of the maintenance/establishment period days shall be extended into the spring of the following year. Counting of the balance of days shall begin no sooner than April 15, unless mutually agreed upon by both the Contractor and the City prior to that date. Early counting shall be based on weather conditions at the time.
3. The Contractor shall maintain all plantings until the turf is fully established. The turf shall be considered fully established when grass stands come in uniform and thick, with no bare or thin spots, and roots have begun to spread and knit together. No weeds shall be allowed in the grass. . If the turf grass is hydroseeded, the Contractor must complete the hydroseeding by September 1. The maintenance/establishment period shall be a minimum period of sixty (60) days.
4. The maintenance work required shall include but not be limited to the following:
   a. Appropriate watering of all plant materials.
   b. Weeding and removal of all weeds from groundcover and planting areas.
   c. Replacement of any dead, dying, or damaged trees, shrubs, perennials, or groundcover.
   d. Filling and replanting of any low areas which may cause standing water.
   e. Adjusting or sprinkler head heights and watering patterns.
   f. Filling and recompaction of eroded areas, along with any required reseeding and/or replanting.
   g. The grass shall be mowed when the blades reach three (3) inches tall and maintained to a minimum height of two (2) inches. No more than one third (1/3) of the blade shall be removed per cutting. The cutting frequency shall be once every five (5) to seven (7) days depending upon grass height and growth rate.
   h. Weekly removal of all trash, litter, clippings, and all foreign debris.
   i. At thirty (30) days after planting, a balanced fertilizer (16-16-16) shall be applied to the grass areas at a rate of one half (½) pound of nitrogen per one thousand (1,000) square feet.
   j. At intervals of thirty (30) days after the first application of fertilizer to the grass, apply a balanced fertilizer (16-16-16) at a rate of one half (½) pound of nitrogen per one thousand (1,000) square feet until the grass is established.

C. Final Acceptance:
1. A final inspection shall be held prior to the end of the maintenance period to insure that all punch list items have been completed and the entire project is ready for acceptance by the Owner.
2. Upon satisfaction that the Contractor has completed all punch list items, the irrigation system is fully and completely functional, and the required As-Built drawings, mylars and maintenance manuals have been submitted, the Owner shall accept the project.
3. An official letter of final acceptance shall be prepared and issued to the Contractor, designer, and the Landscape Architect. Upon final acceptance of the project by the Landscape Architect, the Owner shall assume full responsibility for the project, and the guarantee period shall begin.

21.03.16 GUARANTEE

A. Upon final acceptance of the project as being properly installed, the Contractor shall guarantee the plant materials as follows:
1. All shrubs and groundcovers shall be guaranteed by the Contractor as to growth and health for a period of sixty (60) days after completion of the maintenance period and final acceptance.

2. All trees shall be guaranteed by the contractor to thrive and grow in an acceptable upright position for a period of one (1) year after completion of the maintenance period and final acceptance.

B. The Contractor shall, within fifteen (15) days after receiving written notification by the Landscape Architect, remove and replace all guaranteed plant materials which die or become unhealthy or appear to be in a badly impaired condition at any time during the guarantee period. Any plants that settle below or rise above the desired finished grade shall also be reset to the proper grade.

C. All replacements shall be plants of the same kind, size, and quality as originally specified in the "plant list" and they shall be furnished, planted, staked, and maintained as specified herein at no additional cost.

D. The Contractor will not be responsible for plants destroyed or lost due to occupancy of the project, vandalism on the part of others, or improper maintenance or lack thereof.

E. At the conclusion of the guarantee period and prior to final inspection of the plant materials by the Landscape Architect, the Contractor shall remove all tree stakes. This period of time shall be approximately 1 year after initial planting.

1. Stakes shall be removed by first cutting the ties securing the tree to stakes and secondly pulling stakes or guys out of the ground.
2. Stakes shall not be broken off above, at, or below ground levels but removed completely.

F. At the conclusion of the guarantee period a final inspection of all planting included in this contract shall be made by the Landscape Architect. At that time any plant found to be unhealthy, broken, damaged, or otherwise in an impaired condition shall be noted. Plants so noted shall be removed immediately from the site by the Contractor and replaced by him, as specified under this section, with plants of like kind and size in the manner previously specified for the original planting without extra compensation.

DIVISION 22: CHAIN LINK FENCING

PART 1 GENERAL

22.01.01 SUMMARY

A. Section includes:
   1. Chain link fencing fabric, posts, braces, anchorage, gates, miscellaneous hardware and appurtenances.

22.01.02 REFERENCE STANDARDS

A. ASTM A 53: Standard Specification for Pipe, Steel, Black and Hot-Dipped, Zinc-Coated, Welded and Seamless.
B. ASTM A 121: Standard Specification for Zinc-Coated (Galvanized) Steel Barbed Wire.
C. ASTM A 392: Standard Specification for Zinc-Coated Steel Chain-Link Fence Fabric.
D. ASTM A 491: Standard Specification for Aluminum-Coated Steel Chain-Link Fence Fabric.
E. ASTM A 585: Standard Specification for Aluminum-Coated Steel Barbed Wire.
F. ASTM A 641: Standard Specification for Zinc-Coated (Galvanized) Carbon Steel Wire.
G. ASTM F 567: Standard Practice for Installation of Chain-Link Fence.
H. ASTM F 573: Standard Specification for Residential Zinc-Coated Steel Chain-Link Fence Fabric.
I. ASTM F 626: Standard Specification for Fence Fittings.
J. ASTM F 654: Standard Specification for Residential Chain-Link Fence Gates.
K. ASTM F 668: Standard Specification for Poly(Vinyl Chloride)(PVC)-Coated Steel Chain-Link Fence Fabric.
L. CLFMI: Chain Link Fence Manufactures Institute Product Manual for Chain Link Fence Installation.

22.01.03 SUBMITTALS

A. Drawings: Indicate plan layout, grid, size and spacing of components, accessories, fittings, anchorage, and post section.
B. Data: Submit manufacturer's installation instructions and procedures, including details of fence and gate installation.
C. Submit sample for fence fabric and typical accessories.

PART 2 PRODUCTS

22.02.01 GENERAL

A. Galvanizing: Class 3 per ASTM A 121.
B. Aluminizing: Class 2 per ASTM A 585.
C. Polyvinyl Chloride (PVC): With PVC coated materials, paint all posts, fittings, hardware and accessories as indicated to match PVC color. The fabric shall be hot-dipped galvanized steel wire complying with ASTM A 392 and coated with a continuous PVC bonding process (minimum 15 mil thickness) in accordance with ASTM F 668. Color of PVC coating shall be as indicated, and applied free of voids, cracks, tears, and shall have a smooth and lustrous surface.
D. Steel: Schedule 40 per ASTM A 53.
E. Concrete: Class 3000 minimum, per Cast-in-Place Concrete Section.

22.02.02 CHAIN LINK FABRIC

A. 11 gauge steel wire fabric for all fences equal to or less than sixty (60) inches in height and 9 gauge for fences over sixty (60) inches coated as follows:
   1. Zinc coating per ASTM A 392 requirements.
   2. Aluminum coating per ASTM A 491 requirements.
   3. Polyvinyl chloride coating par ASTM F 668 requirements.
B. For residential fabric, provide zinc coated fabric per ASTM F 573 requirements.
C. Unless indicated otherwise, use chain link fabric that has approximately two (2) inches square mesh and coated after fabrication.

D. Knuckle finish top edge and twist and barb bottom edge of fabric less than sixty (60) inches wide. For fabric sixty (60) inches or grater in width, knuckle both top and bottom edges. Provide fabric that barbing has been done by cutting the wire on the bias.

E. If indicated, insert slats in fabric.

22.02.03 BARBED WIRE

A. Two strand, 12-1/2 gauge wire with 14 gauge, 4 point round barbs spaced approximately five (5) inches on center.

22.02.04 TENSION WIRES AND FABRIC TIES

A. Tension Wires: 7 gauge galvanized coil spring steel wire per ASTM A 641 requirements.

B. Fabric Fasteners: 9 gauge galvanized or 6 gauge aluminum wire, or approved non-corrosive metal bands, for ties to fasten fabric to posts, rails, and gate frames. Fasten fabric to bottom tension wire spaced twenty four (24) inches on center.

22.02.05 TRUSS OR TENSION BARS

A. Galvanized steel rod 3/8 inch diameter for truss or tension bars used in trussing gate frames and line posts adjacent in end, corner, slope, or gate posts. When used in trussing line posts, provide adjustment by means of galvanized turnbuckles or other suitable tightening devices.

B. Tension Bars:

1. Galvanized high carbon steel bars not smaller than 3/16 inch x ¾ inch for tensions bars to fasten fabric to end and corner posts and gate frames. Provide one (1) tension bar for each end post and two (2) for each corner and pull post per section of fabric.
2. Use tension bar bands made from heavy pressed galvanized steel spaced on fifteen (15) inch centers to secure tension bars to posts.

22.02.06 POSTS, CAPS, RAILS, COUPLINGS

A. Posts: Galvanized Schedule 40 steel, at the indicated length.

B. Caps: Pressed galvanized steel or malleable iron designed for fit securely over post ends forming a weather tight closure. Where a top rail is used, provide cap to permit passage of top rail. "H" section posts do not require caps.

C. Top, Intermediate, and Bottom Rails: Galvanized steel, in lengths as required. Provide joint couplings to connect rails securely. Provide means for attaching top rail securely to each end, corner, line, slope, and gate posts.

D. Joint Coupling: Galvanized steel, six (6) inches long minimum for each joint. One (1) coupling in five (5) shall have expansion spring. Couplings shall be outside sleeve type with bore of sleeve true to maintain adjacent lengths of rail in alignment.

Table 1 – Posts, Frames, Stiffeners, Rails

Proposed Use	Nominal Type and Size
End, corner, slope, and gate posts for single gates 6 feet or less in width and double gate 12 feet or less in width for: 1. Fence less than 72 inches high 2. Fence 72 inches or higher	 2 3/8" OD Pipe 2 7/8" OD Pipe
Gate posts for single swing gate over 6 feet, but not over 13 feet in width and double swing gates over 12 feet, but not over 26 feet in width or for all slide gates with leaves larger than 6 feet	4" OD Pipe
Gate posts for single swing gates over 13 feet, but not over 18 feet in width and double swing gates over 26 feet, but not over 36 feet in width; backstop posts	6 5/8" OD Pipe
Gate posts for single swing gates over 18 feet in width and double swing gates over 36 feet	8 5/8" OD pipe

Frame for gates	1 7/8" OD pipe
Stiffeners for gates	1 5/8" OD pipe
Line posts for fence 72 inches or higher	2 3/8" OD pipe
Line posts for fences less than 72 inches high	1 7/8" OD pipe
Top Rail	1 5/8"OD pipe or 1 ½"x1 5/8" "H"
Bottom Rail	7 gauge, coiled spring steel tension wire

22.02.07 FITTINGS AND HARDWARE

A. Unless indicated otherwise, galvanize fittings and hardware.

B. Rivets: Make all hardware attachments with galvanized steel rivets.

22.02.08 SUPPORT OR EXTENSION ARM

A. Use support or extension arms for barbed wire that are of a type that can be attached to the tops of the posts and carry the number of wires indicated.

B. Use only support arms on the fence foe barbed wire that are capable of supporting a 250 pound vertical load at the end of the arm without causing permanent deflection.

C. Single support arms are to be integral with a top post weather cap and have a hole for passage of the top rail when required.

22.02.09 GATES

A. Residential gates: Refer to ASTM F 654 requirements.

B. Provide additional horizontal and vertical members to ensure proper gate operation and for attachment of fabric, hardware and accessories.

C. Assemble gate frames and attach hardware by welding or by using fittings and rivets to make rigid connections. Use same fabric as for fence. Install fabric with stretcher bars to gate frame at not more than fifteen (15) inches on center.

D. Provide diagonal cross-bracing consisting of 3/8 inch diameter adjustable length truss rods on gates where necessary to prevent frame from sagging or twisting.

22.02.10 GATE HARDWARE

A. Hinges: Pressed steel or malleable iron to suit gate sizes, non-lift-off type, offset to permit 180 degree gate opening. Provide minimum of one pair of hinges for each leaf.

B. Latch: Forked steel type or plunger-bar steel type to permit operation from either side of gate. Provide locking device and padlock eye as integral part of latch.

C. Keeper: Provide keeper for all vehicle gates which automatically engages the gate leaf and holds it in the open position until manually released.

D. Gate Stops: Mushroom type or flush plate with anchors set in concrete to engage the center drop rod or plunger bar.

22.02.11 ALTERNATIVE FINISHES

A. Where a colored finish other than galvanized is desired, the following shall apply:

1. All metal posts, caps, rails, and hardware (excepting fabric) shall be painted.
2. Where paint is applied to a galvanized surface, the paint shall be a modified phenolic alkyd type (Valley Paint V-101 or approved equal) or an acrylic type (Valley Paint 2532 Valcryl or approved equal) or Aquapon. Owner shall select the desired color. Color shall generally be selected to match color of vinyl clad fencing.
3. Where paint is applied directly to a metal surface (non-galvanized), an industrial strength steel primer shall first be applied per manufacturer's specifications. The steel surface shall be properly prepared prior to painting by first grinding all welds smooth and even, insuring that no holes or pits are present due to welding or any other cause, removing all rust and corrosion, and then applying primer.

PART 3 EXECUTION

22.03.01 PREPARATION

A. Coordinate utility location. Follow Coordination Section.
B. Excavate per Excavation Section requirements.
C. Refer to ASTM F 567 requirements and CLFMI products manual for chain link fence installation.
D. Protect existing trees.
E. Limit the amount of clearing and grading along the fence line to permit proper installation.

22.03.02 LAYOUT OF WORK

A. Accurately locate and stake location and points necessary for installation of fence and gates.
B. General arrangements and location of fence and gates are indicated. Install except for minor changes required by unforeseen conflicts with work of other trades.

22.03.03 INSTALLATION OF POSTS

A. Space line posts as follows:
   1. Tangent sections to 500 feet radius: 10 feet maximum.
   2. 200 feet radius to under 500 feet radius: 8 feet maximum.
   3. 100 feet radius to under 200 feet radius: 6 feet maximum.
   4. Under 100 feet radius: 5 feet maximum.
B. Provide pull posts at 500 feet maximum intervals. Changes in line of 30 degrees or more are considered corners.
C. Set all posts to true line and grade in concrete bases or in approved pipe sleeves or sockets. Check for vertical and horizontal alignment.
D. Posts shall have concrete bases of at least ten (10) inches in diameter. Place a minimum of six (6) inches concrete below each post. Depth of post in concrete shall be as follows:
   1. Line Posts: 18 inches.
   2. End, Pull, Corner, and Gate Posts of less than 6 inches Diameter: 24 inches
   3. Gate posts: 30 inches.
E. Where posts are required to be set in concrete walls or masonry, set sockets for the posts to a depth of at least 18 inches. Use sockets that consist of lengths of 0.048 inch galvanized metal pipe sleeves, with an inside diameter sufficient to allow the posts to fit loosely therein. Coat the inside of the socket and outside of the posts with an approved bituminous paint. Caulk the posts securely in place with lead wool.

22.03.04 INSTALLATION OF BRACE ASSEMBLIES

A. Attached horizontal brace rail from the mid-point of end, pull, corner, or gate posts to the mid-point of the first ensuing line post as a compression member. Install braces from top of said line posts back to the bottom of the end, pull, corner, or gate post with steel truss rods and turnbuckles so posts are plumb when diagonal truss rod is under proper tension.

22.03.05 INSTALLATION OF RAILS

A. Install rails level and plumb with grade between posts and attached to posts before stretching fabric. Top rails shall form continuous brace from end-to-end of each run of fence.

22.03.06 INSTALLATION OF FENCE FABRIC

A. Place fence fabric on the security side of posts unless otherwise specified. Place fabric approximately one (1) inch above the ground. Maintain a straight grade between posts by excavating high pints of the ground. Filling depressions with soil will be permitted only upon approval of Engineer.
B. Stretch the fabric taut and securely fasten to posts. Fasten to end, gate, corner, and pull posts. Secure stretcher bars with metal bands spaced at fifteen (15) inch intervals. Cut the fabric and fasten each span independently at all pull and corner posts. Fasten to line posts with tie wire, metal bands, or other approved methods at fifteen (15) inch intervals. Attach the top edge of fabric to the top rail or tension cable at approximately twenty four (24) inches intervals. Attach bottom tension wire to fabric with tie wires at twenty four (24) inch intervals and secure to the end of pull posts with brace bands.

C. Draw wire to assure minimum sag at high temperature and no breakage at low temperature. Connect the wires and arms by means of 0.142 gauge galvanized wire stays.

22.03.07 INSTALLATION OF GATES

A. Install gates plumb, level, and secure for full opening without interference. Install ground-set items in concrete for anchorage as recommended by the fence manufacturer. Adjust hardware for smooth operation.

22.03.08 REPAIR DAMAGED COATING

A. Grind smooth and wire brush all welds made after galvanizing to remove loose or burned zinc coating, after which neatly coat the areas with 50-50 solder or as otherwise directed by the Engineer. Make repairs to abraded or otherwise damaged zinc coating in a similar manner. Replace PVC coating.

22.03.09 INSTALLATION OF CONCRETE MOW STRIP

A. Where a concrete mow-strip is specified to be installed at the base of a chain link fence, it shall be installed at a minimum dimension of 12 inches wide and 6 inches thick. Fence posts shall be centered in the mow-strip. Joints in the mow-strip shall be struck at each fence post.

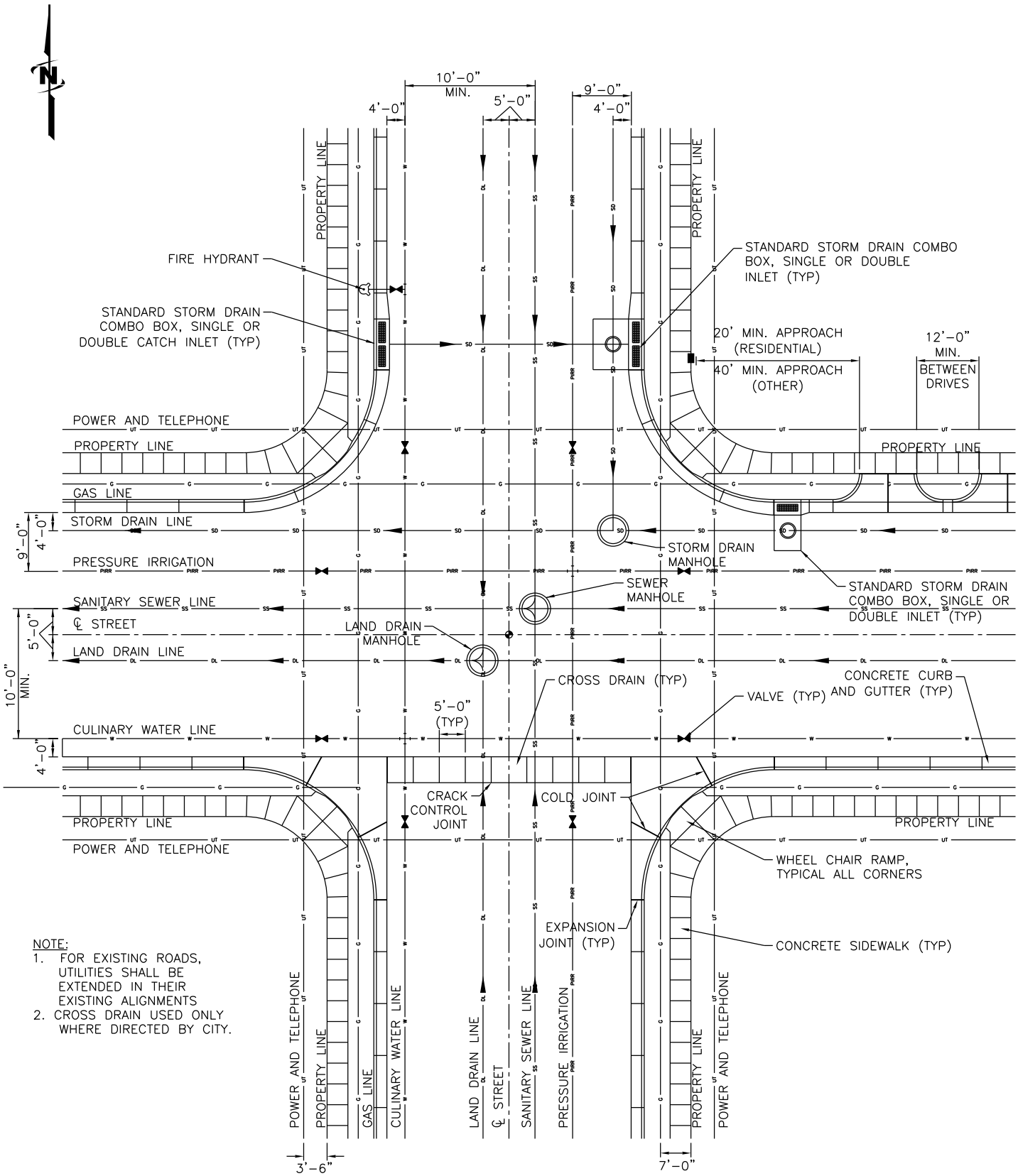

NOTE:
1. FOR EXISTING ROADS, UTILITIES SHALL BE EXTENDED IN THEIR EXISTING ALIGNMENTS
2. CROSS DRAIN USED ONLY WHERE DIRECTED BY CITY.

1 TYPICAL STREET IMPROVEMENTS AND UTILITY LOCATIONS DETAIL

SCALE: NOT TO SCALE

STATEMENT OF USE

THIS DOCUMENT AND ANY ILLUSTRATIONS HEREON ARE PROVIDED AS STANDARD CONSTRUCTION DETAILS WITHIN **SYRACUSE CITY**. DEVIATION FROM THIS DOCUMENT REQUIRES APPROVAL OF SYRACUSE CITY. SYRACUSE CITY CORPORATION CAN NOT BE HELD LIABLE FOR MISUSE OR CHANGES REGARDING THIS DOCUMENT.

NO.	REVISION DESCRIPTION	BY	APR.	DATE
1	UPDATED UTILITY LOCATIONS	BB	RCW	2/11/14

CAD FILE: SYRACUSE CITY STANDARDS
DRAWN BY: BB
DESIGN BY: BB
CHECKED BY: RCW
LAST UPDATED: 2/11/2014
DATE ADOPTED: 2/11/2014

SYRACUSE CITY EST. 1935

DEVELOPMENT STANDARDS
SYRACUSE CITY CORPORATION

STANDARD STREET IMPROVEMENTS AND UTILITY LOCATIONS

SHEET 1

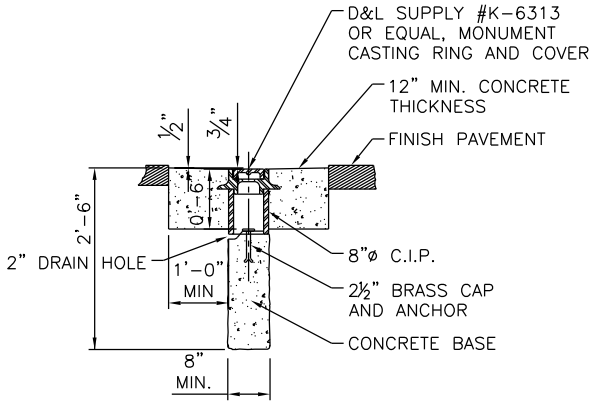

1 SURVEY MONUMENT SECTION

SCALE:NOT TO SCALE

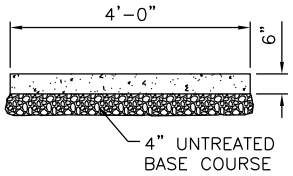

NOTES:
1. CRACK CONTROL JOINTS AT 4 FT.
2. EXPANSION JOINTS AT 40 FT.
3. 4" THICK SIDEWALK MAY BE INSTALLED IF A SITE PLAN IS PROVIDED TO THE CITY PRIOR TO CONSTRUCTION, BUT CONCRETE SHALL BE 6" THICK THRU DRIVEWAYS AND DESIGNATED VEHICLE CROSSINGS. IF A SITE PLAN IS NOT PROVIDED, 6" THICK CONCRETE MUST BE INSTALLED. THROUGHOUT THE PROJECT.
4. SIDEWALK MAY BE WIDER WHERE SPECIFIED BY CITY ENGINEERING DEPARTMENT.
5. SIDEWALK WIDTH MAY VARY TO MEET MINIMUM ADA STANDARDS.

2 SIDEWALK SECTION

SCALE:NOT TO SCALE

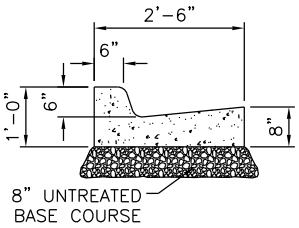

NOTES:
1. CRACK CONTROL JOINTS AT 10 FT.
2. EXPANSION JOINTS AT 50 FT.

3 CURB AND GUTTER SECTION

SCALE:NOT TO SCALE

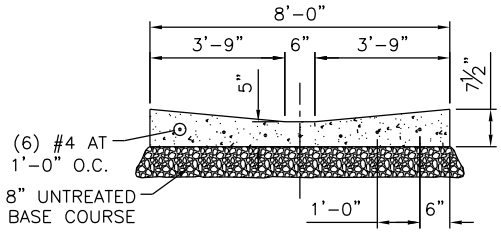

NOTES:
1. CONSTRUCTION AND EXPANSION JOINTS AT 5 FT.
2. EXPANSION JOINTS AT EDGE OF APRON.
3. CROSS DRAIN USED ONLY WHERE DIRECTED BY CITY.

4 CROSS DRAIN SECTION

SCALE:NOT TO SCALE

NOTES:
1. SURFACE SET 1/2" BELOW ASPHALT SURFACE OR MATCH CONCRETE PAVEMENT SURFACE

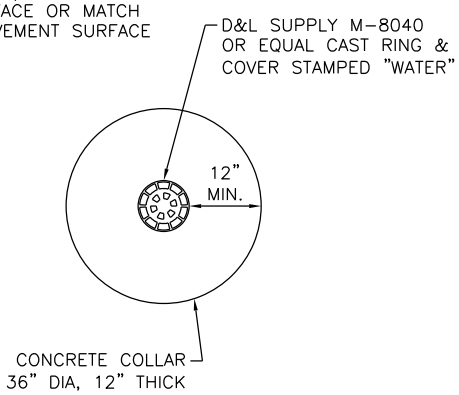

5 WATER VALVE BOX

SCALE:NOT TO SCALE

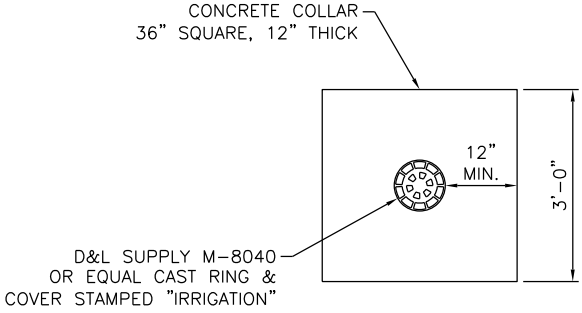

NOTES:
1. SURFACE SET 1/2" BELOW ASPHALT SURFACE OR MATCH CONCRETE PAVEMENT SURFACE

6 IRRIGATION VALVE BOX

SCALE:NOT TO SCALE

STATEMENT OF USE
THIS DOCUMENT AND ANY ILLUSTRATIONS HEREON ARE PROVIDED AS STANDARD CONSTRUCTION DETAILS WITHIN **SYRACUSE CITY.** DEVIATION FROM THIS DOCUMENT REQUIRES APPROVAL OF SYRACUSE CITY. SYRACUSE CITY CORPORATION CAN NOT BE HELD LIABLE FOR MISUSE OR CHANGES REGARDING THIS DOCUMENT.

NO.	REVISION DESCRIPTION	BY	APR.	DATE
1	CLARIFIED SIDEWALK THICKNESS/WIDENED CROSS DRAIN	BB	RCW	2/11/14

CAD FILE: SYRACUSE CITY STANDARDS
DRAWN BY: BB
DESIGN BY: BB
CHECKED BY: RCW
LAST UPDATED: 2/11/2014
DATE ADOPTED: 2/11/2014

SYRACUSE CITY EST. 1935

DEVELOPMENT STANDARDS
SYRACUSE CITY CORPORATION

STREET IMPROVEMENT SECTIONS

SHEET 2

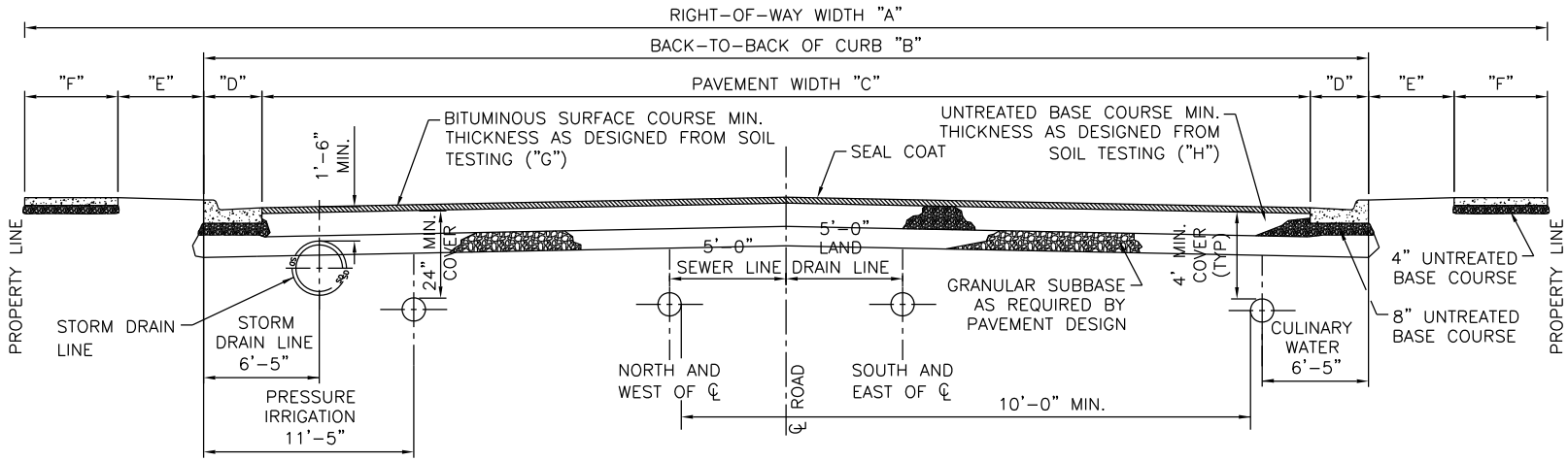

TYPICAL STREET DIMENSIONS								
STREET DESIGNATION	"A"	"B"	"C"	"D"	"E"	"F"	"G"	"H"
ARTERIAL	110	91'	86'	2.5'	*3.0'	*4.0'	NOTE 2	NOTE 2
MINOR ARTERIAL	84'	66'	61'	2.5'	*5.0'	4.0'	NOTE 2	NOTE 2
COLLECTOR	66'	50'	45'	2.5'	*4.0'	4.0'	NOTE 2	NOTE 2
LOCAL	60'	40'	35'	2.5'	*6.0'	4.0'	*3"	*10"
LOW VOLUME LOCAL	60'	30'	25'	2.5'	*11.0'	4.0'	*3"	*10"
*MINIMUM REQUIREMENT								

NOTES:
1. TOP BACK OF CURB ON BOTH SIDES OF ROAD TO BE SAME ELEVATIONS.
2. THE CITY ENGINEER SHALL VERIFY PAVEMENT DESIGN PRESCRIBED BY SOILS REPORT (SEE SPECIFICATIONS).
3. COMMERCIAL AND INDUSTRIAL STREET SECTIONS ARE DETERMINED BASED ON A TRAFFIC ANALYSIS FOR THE PARTICULAR USE.
4. VARIATIONS IN TYPICAL STREET DIMENSIONS MAY BE CONSIDERED BY THE CITY WHERE PHYSICAL CONSTRAINTS OF THE NATURAL LAND OR CREATING ENHANCEMENTS WOULD PREVENT THE ABILITY TO FOLLOW ESTABLISHED DIMENSIONS.

1 STANDARD STREET SECTION

SCALE: NOT TO SCALE

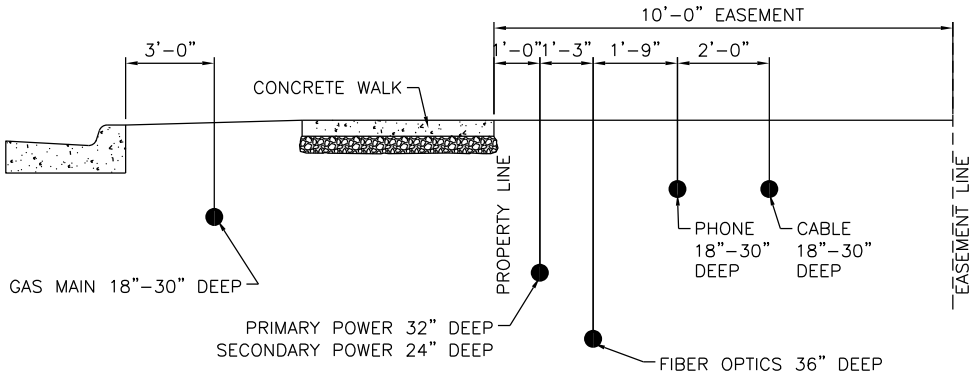

A UTILITY EASEMENT SECTION

SCALE: NOT TO SCALE

LOW VOLUME LOCAL STREET DESIGN MAY ONLY BE USED WHEN THE FOLLOWING CRITERIA IS SATISFIED:

1. TRAFFIC VOLUME IS 400 VEHICLES PER DAY OR LESS.
2. PARKING IS PROHIBITED ON THE STREET. OFF STREET PARKING DEMANDS MUST BE SATISFIED.

TYPICAL SURFACE TREATMENT APPLICATIONS

HIGH DENSITY MINERAL BOND SEAL: PARKING LOT, PAVED TRAIL, LOW VOLUME LOCAL, LOCAL STREET
CHIP & FOG: COLLECTOR, ARTERIAL

NO.	REVISION DESCRIPTION	BY	APR.	DATE
1	DELETED MAJOR COLLECTOR/CHANGED UTILITY LOCATIONS	BB	RCW	2/11/14

STATEMENT OF USE
THIS DOCUMENT AND ANY ILLUSTRATIONS HEREON ARE PROVIDED AS STANDARD CONSTRUCTION DETAILS WITHIN SYRACUSE CITY. DEVIATION FROM THIS DOCUMENT REQUIRES APPROVAL OF SYRACUSE CITY. SYRACUSE CITY CORPORATION CAN NOT BE HELD LIABLE FOR MISUSE OR CHANGES REGARDING THIS DOCUMENT.

CAD FILE: SYRACUSE CITY STANDARDS
DRAWN BY: BB
DESIGN BY: BB
CHECKED BY: RCW
LAST UPDATED: 2/11/2014
DATE ADOPTED: 2/11/2014

SYRACUSE CITY EST. 1935

DEVELOPMENT STANDARDS
SYRACUSE CITY CORPORATION

STANDARD STREET SECTION

SHEET 3

NOTES:

1. MAINTAIN 10' MIN VERTICAL CLEARANCE.
2. MAINTAIN 3' MIN SEPARATION FROM VERTICAL WALL OR FENCE.
3. MAINTAIN 4' MIN SEPARATION FROM TRAILS ALLOWING BICYCLE USE.

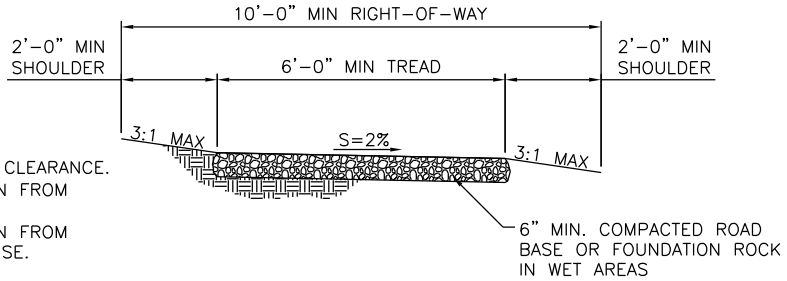

3 STANDARD EQUESTRIAN TRAIL SECTION

SCALE:NOT TO SCALE

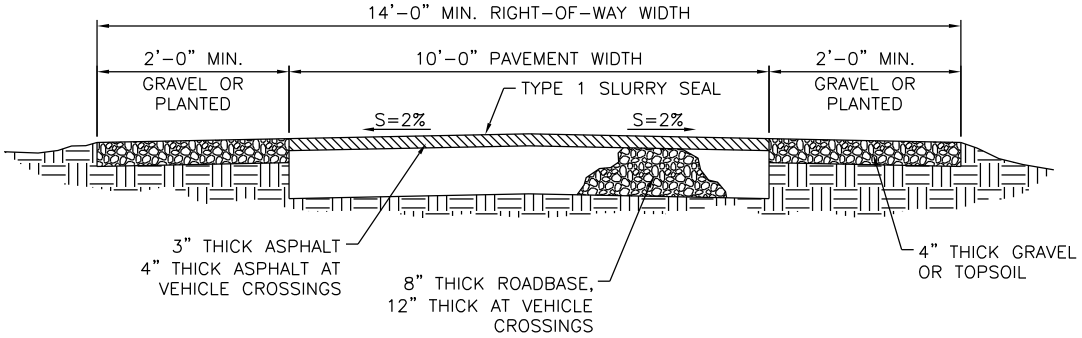

NOTE:
CROWN IN ASPHALT IS NOT REQUIRED. A 2% CROSS-SLOPE IS REQUIRED WITH OR WITHOUT A CROWN IN THE ASPHALT. CROSS-SLOPES WITHOUT A CROWN MUST BE SLOPED IN A DIRECTION TO DIRECT SURFACE WATER TOWARD THE NEAREST STORM DRAIN COLLECTION.

2 STANDARD TRAIL SECTION

SCALE:NOT TO SCALE

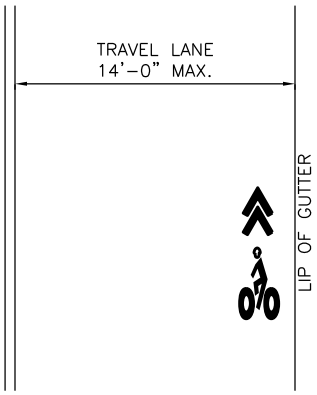

SHARED LANE

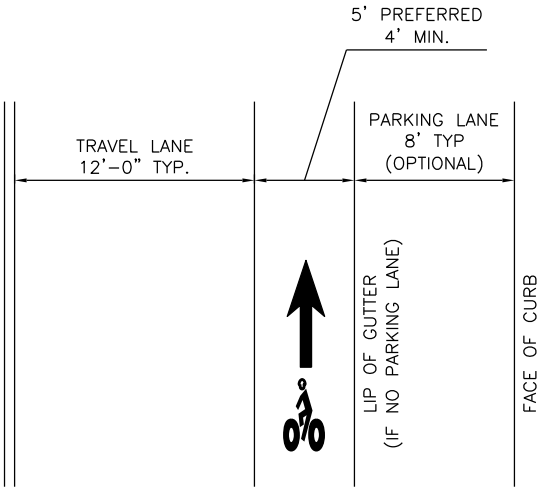

DESIGNATED BICYCLE LANE

1 BICYCLE LANE DETAIL

SCALE:NOT TO SCALE

STATEMENT OF USE
THIS DOCUMENT AND ANY ILLUSTRATIONS HEREON ARE PROVIDED AS STANDARD CONSTRUCTION DETAILS WITHIN **SYRACUSE CITY**. DEVIATION FROM THIS DOCUMENT REQUIRES APPROVAL OF SYRACUSE CITY. SYRACUSE CITY CORPORATION CAN NOT BE HELD LIABLE FOR MISUSE OR CHANGES REGARDING THIS DOCUMENT.

NO.	REVISION DESCRIPTION	BY	APR.	DATE

CAD FILE: SYRACUSE CITY STANDARDS
DRAWN BY: BB
DESIGN BY: BB
CHECKED BY: RCW
LAST UPDATED: 11/1/2011
DATE ADOPTED: 2/14/2012

SYRACUSE CITY EST. 1935

DEVELOPMENT STANDARDS
SYRACUSE CITY CORPORATION

STANDARD TRAIL SECTION

SHEET 4

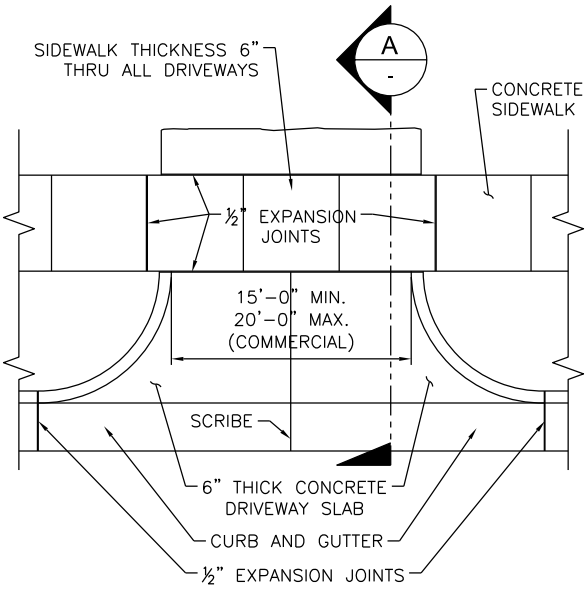

ONE WAY TRAFFIC

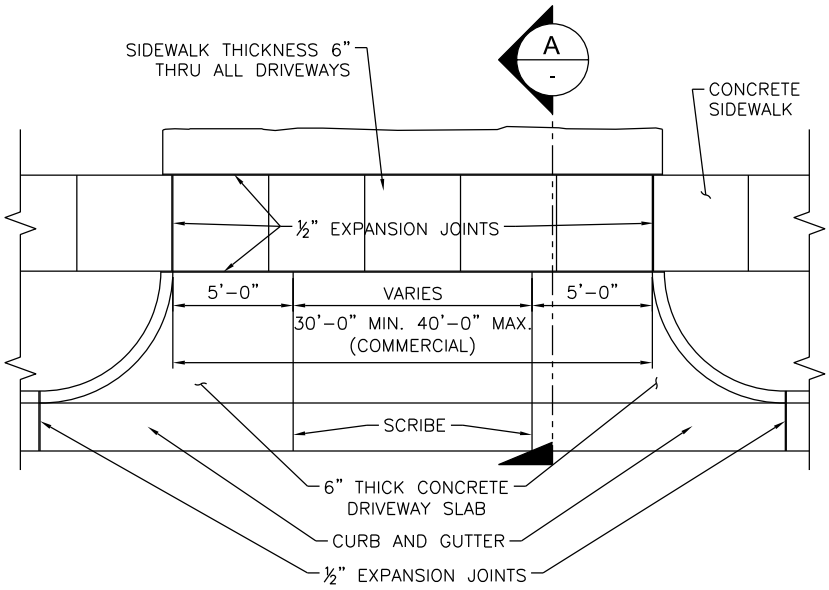

TWO WAY TRAFFIC

1 TYPE 1 DRIVEWAY APPROACH DETAIL

SCALE:NOT TO SCALE (PREFERRED STYLE FOR COMMERCIAL DEVELOPMENT)

NOTE:

1. SCRIBE SIDEWALK ½" DEPTH AT EACH 4'-0".
2. EXPANSION JOINT AT EACH 32'-0".
3. CURB AND GUTTER EXPANSION JOINT AT EACH 50'.
4. CURB AND GUTTER CONSTRUCTION JOINT AT EACH 10'.

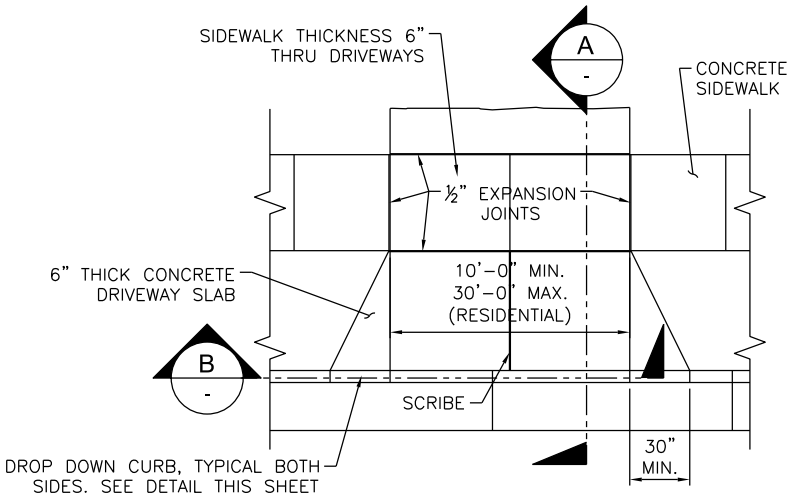

2 TYPE 2 DRIVEWAY APPROACH DETAIL

SCALE:NOT TO SCALE (PREFERRED STYLE FOR RESIDENTIAL DEVELOPMENT)

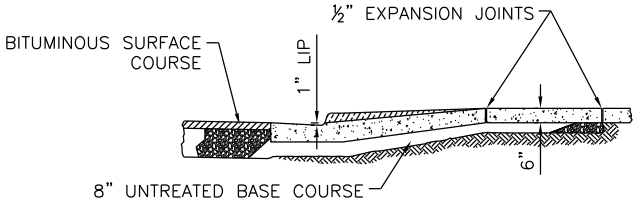

A DRIVEWAY APPROACH SECTION

SCALE:NOT TO SCALE

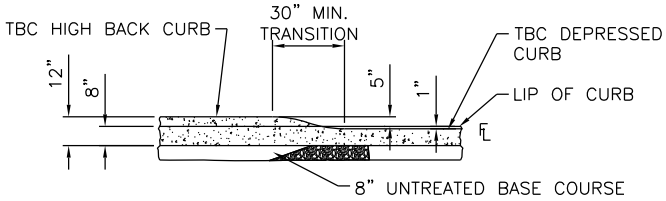

B DRIVEWAY APPROACH SECTION

SCALE:NOT TO SCALE

STATEMENT OF USE

THIS DOCUMENT AND ANY ILLUSTRATIONS HEREON ARE PROVIDED AS STANDARD CONSTRUCTION DETAILS WITHIN **SYRACUSE CITY.** DEVIATION FROM THIS DOCUMENT REQUIRES APPROVAL OF SYRACUSE CITY. SYRACUSE CITY CORPORATION CAN NOT BE HELD LIABLE FOR MISUSE OR CHANGES REGARDING THIS DOCUMENT.

NO.	REVISION DESCRIPTION	BY	APR.	DATE

CAD FILE: SYRACUSE CITY STANDARDS
DRAWN BY: BB
DESIGN BY: BB
CHECKED BY: RCW
LAST UPDATED: 11/1/2011
DATE ADOPTED: 2/14/2012

SYRACUSE CITY EST. 1935

DEVELOPMENT STANDARDS
SYRACUSE CITY CORPORATION

DRIVEWAY DETAILS

SHEET 5

CUL-DE-SAC NOTES:

1. 500'-0" MAX. DISTANCE FROM CENTERLINE OF ADJOINING STREET TO RADIUS OF CUL-DE-SAC. LENGTHS EXCEEDING THIS UP TO 800'-0" MAY BE CONSIDERED UNDER 8.03.010.12.
2. CUL-DE-SAC SHOULD BE USED ONLY WHERE UNUSUAL CONDITIONS EXIST.
3. A CUL-DE-SAC TURNABOUT IS REQUIRED WHEN PUBLIC AND PRIVATE DEAD-END STREETS EXCEED ONE LOT UP TO A MAX OF 150 FEET.
4. STREET SLOPES GREATER THAN 10% MUST RECEIVE WRITTEN APPROVAL FROM FIRE DISTRICT.

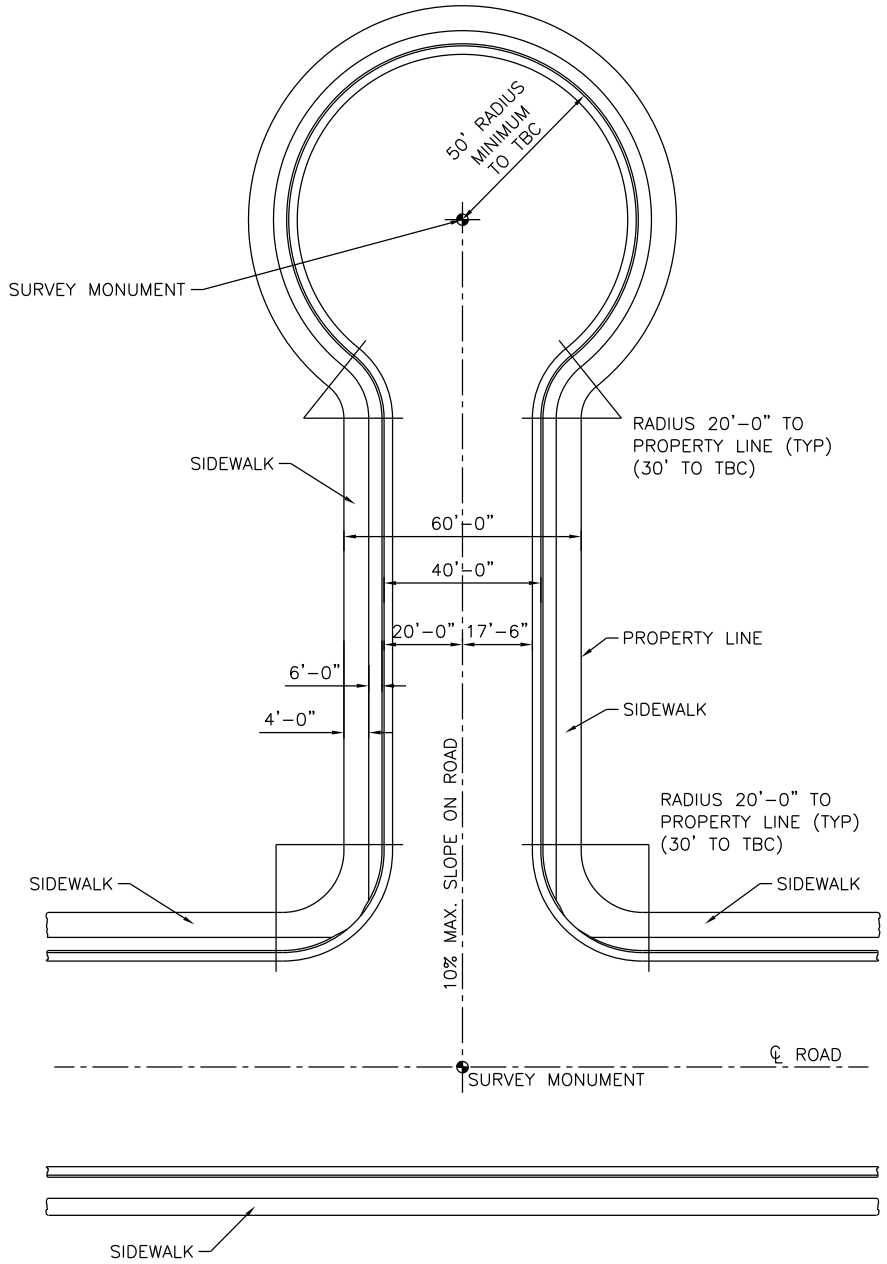

TEMPORARY TURN-AROUND NOTES:

IN AREAS WHERE ROADS LONGER THAN ONE LOT ARE MASTER-PLANNED TO EXTEND AT A FUTURE TIME, A TEMPORARY TURN-AROUND SHALL BE USED WITH THE FOLLOWING REQUIREMENTS:

1. TEMPORARY TURN-AROUNDS SHALL BE HARD-SURFACED AND MATCH THE PAVEMENT DESIGN OF THE CONNECTING ROAD.
2. TEMPORARY TURN-AROUNDS SHALL MATCH THE GEOMETRIC LAYOUT OF A TYPICAL CUL-DE-SAC WITH THE EXCEPTION FOR MAXIMUM LENGTH.
3. CURB, GUTTER, AND SIDEWALK IMPROVEMENTS SURROUNDING THE TEMPORARY TURN-AROUND MAY NOT BE REQUIRED IF PROOF IS PROVIDED TO THE CITY THAT PERMANENT IMPROVEMENTS WILL BE INSTALLED WITHIN TWO YEARS FROM THE CITY'S ACCEPTANCE OF THE TEMPORARY TURN-AROUND.
4. A PROJECT OR DEVELOPMENT INVOLVING THE CONNECTION OF A NEW STREET TO A TEMPORARY TURN-AROUND SHALL BEAR THE RESPONSIBILITY AND COSTS TO REMOVE THE TEMPORARY TURN-AROUND AND RE-ESTABLISH THE IMPROVEMENTS NECESSARY TO MAKE A PROPER CONNECTION.

1 TYPICAL CUL-DE-SAC DETAIL

SCALE: NOT TO SCALE

STATEMENT OF USE

THIS DOCUMENT AND ANY ILLUSTRATIONS HEREON ARE PROVIDED AS STANDARD CONSTRUCTION DETAILS WITHIN **SYRACUSE CITY**. DEVIATION FROM THIS DOCUMENT REQUIRES APPROVAL OF SYRACUSE CITY. SYRACUSE CITY CORPORATION CAN NOT BE HELD LIABLE FOR MISUSE OR CHANGES REGARDING THIS DOCUMENT.

NO.	REVISION DESCRIPTION	BY	APR.	DATE
1	UPDATED LENGTH TO MATCH CURRENT ORDINANCE	BB	RCW	2/11/14

CAD FILE: SYRACUSE CITY STANDARDS
DRAWN BY: BB
DESIGN BY: BB
CHECKED BY: RCW
LAST UPDATED: 2/11/2014
DATE ADOPTED: 2/11/2014

SYRACUSE CITY EST. 1935

DEVELOPMENT STANDARDS
SYRACUSE CITY CORPORATION

TYPICAL CUL-DE-SAC

SHEET 6

NOTES:
1. THE STANDARD COLOR FOR THE DETECTABLE WARNING SHALL BE YELLOW.
2. WHEN A DETECTABLE WARNING SURFACE DOME IS CUT, THE REMAINING PORTION OF THE DOME SHALL BE BEVELED TO A MAXIMUM SLOPE OF 1:2.
3. INSTALLATION SHALL BE DONE IN ACCORDANCE WITH MANUFACTURER'S RECOMMENDATION.

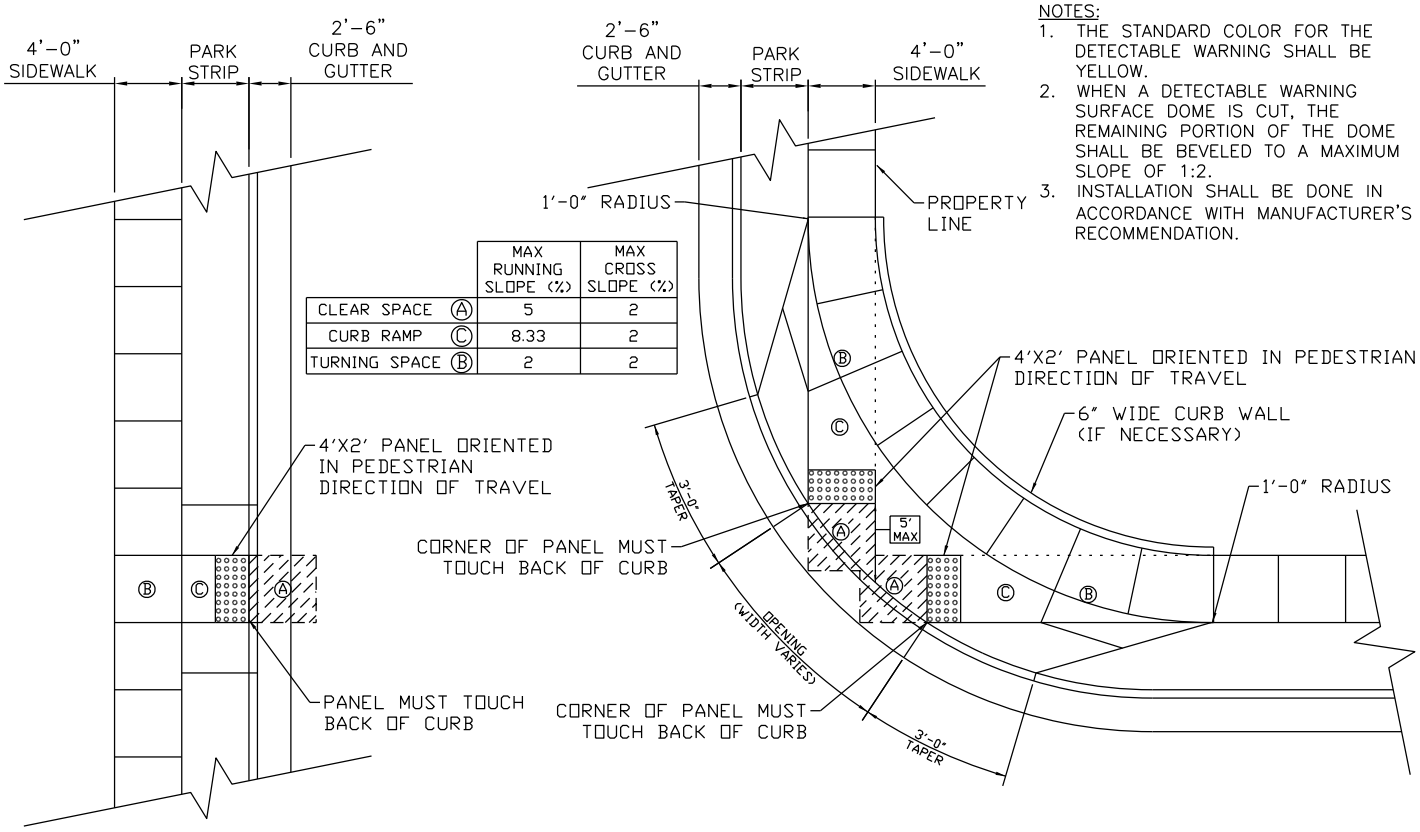

	MAX RUNNING SLOPE (%)	MAX CROSS SLOPE (%)
CLEAR SPACE (A)	5	2
CURB RAMP (C)	8.33	2
TURNING SPACE (B)	2	2

1 A.D.A. WHEELCHAIR RAMP DETAIL

SCALE:NOT TO SCALE

THIS DETAIL IS MEANT TO BE A SUPPLEMENT TO THE APWA MANUAL OF STANDARD PLANS. ANY DISCREPANCY BETWEEN THIS PLAN AND THE MOST CURRENT APWA STANDARD, THE APWA STANDARD SHALL GOVERN.

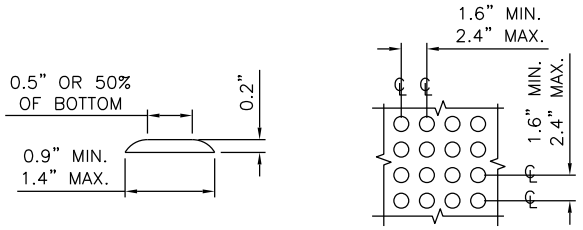

2 RAISED TRUNCATED DOMES DETAIL

SCALE:NOT TO SCALE

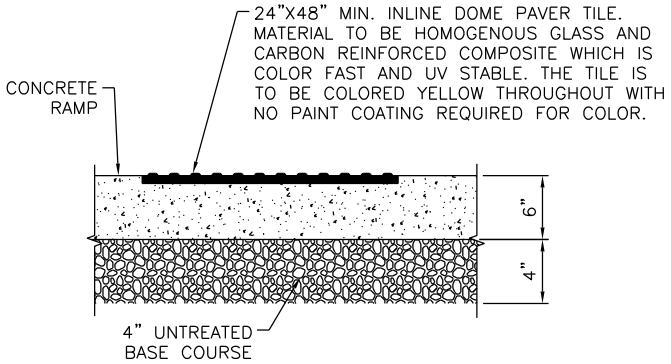

3 INLINE DOME PAVER TILE DETAIL

SCALE:NOT TO SCALE

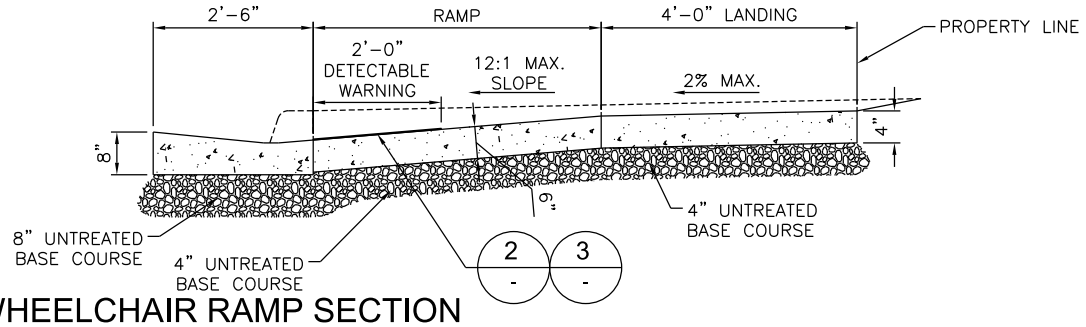

A A.D.A. WHEELCHAIR RAMP SECTION

SCALE:NOT TO SCALE

STATEMENT OF USE

THIS DOCUMENT AND ANY ILLUSTRATIONS HEREON ARE PROVIDED AS STANDARD CONSTRUCTION DETAILS WITHIN **SYRACUSE CITY**. DEVIATION FROM THIS DOCUMENT REQUIRES APPROVAL OF SYRACUSE CITY. SYRACUSE CITY CORPORATION CAN NOT BE HELD LIABLE FOR MISUSE OR CHANGES REGARDING THIS DOCUMENT.

NO.	REVISION DESCRIPTION	BY	APR.	DATE
1	UPDATED TO MEET CURRENT ADA STANDARDS	BB	RCW	2/11/14

CAD FILE: SYRACUSE CITY STANDARDS
DRAWN BY: BB
DESIGN BY: BB
CHECKED BY: RCW
LAST UPDATED: 2/11/2014
DATE ADOPTED: 2/11/2014

SYRACUSE CITY EST. 1935

DEVELOPMENT STANDARDS
SYRACUSE CITY CORPORATION

A.D.A. WHEELCHAIR RAMP DETAIL

SHEET 7

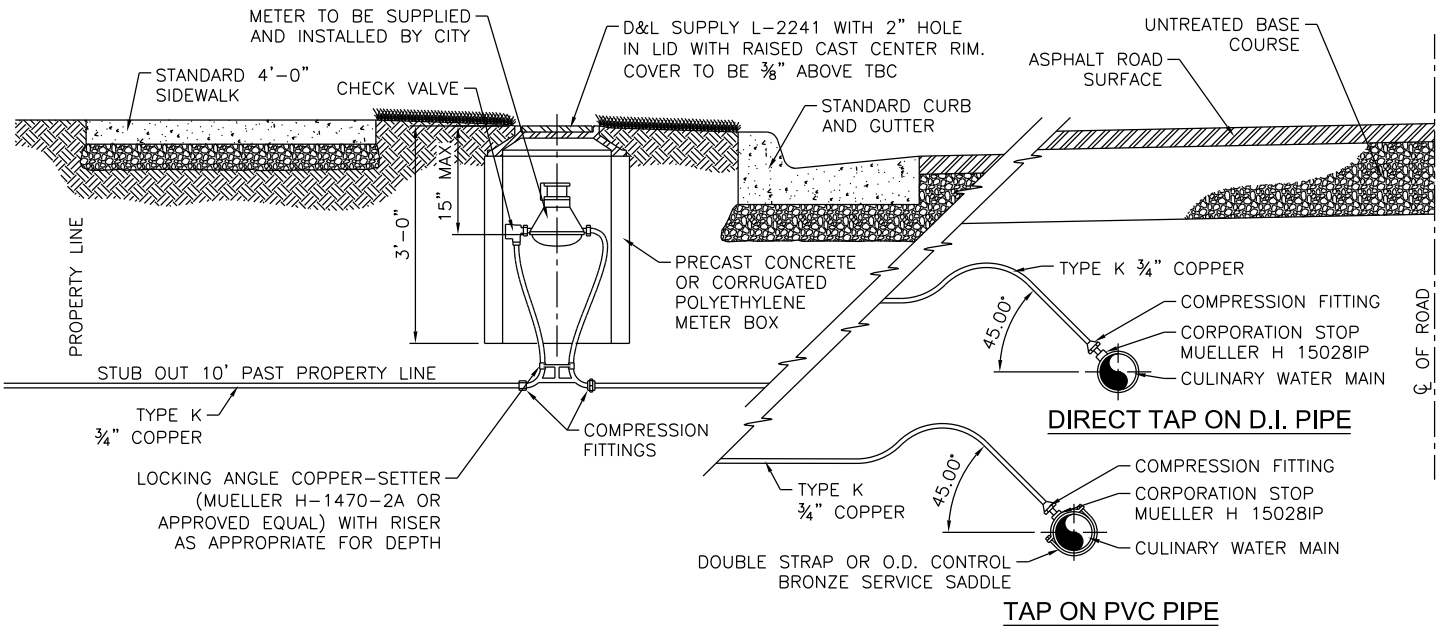

SYRACUSE CITY CORPORATION WATER SERVICE INFORMATION					
SERVICE SIZE	METER BOX SIZE	TYPE OF MATERIAL FOR METER BOX	METER BOX SIZE	CONNECTION TYPE	BYPASS
3/4"	18" DIA.	CONCRETE, CORRUGATED POLYETHYLENE	BY CITY	NPT	NO
1"	24" DIA.	CONCRETE, CORRUGATED POLYETHYLENE	BY CITY	NPT	NO
1 1/2"	48" BOX	CONCRETE	BY CITY	FLANGE	YES
2"	48" BOX	CONCRETE	BY CITY	FLANGE	YES
**>2"	RECT. BOX	CONCRETE	BY CITY	FLANGE	YES

**METER & BOX SHALL BE INSTALLED PER 2012 APWA STANDARD PLAN BASED ON THE METER SIZE:
3" COMPOUND METER – PLAN 523
4" COMPOUND METER – PLAN 523
6" COMPOUND METER – PLAN 525
8" COMPOUND METER – PLAN 527
10" TURBO METER – PLAN 529

1 TYPICAL WATER CONNECTION

SCALE:NOT TO SCALE

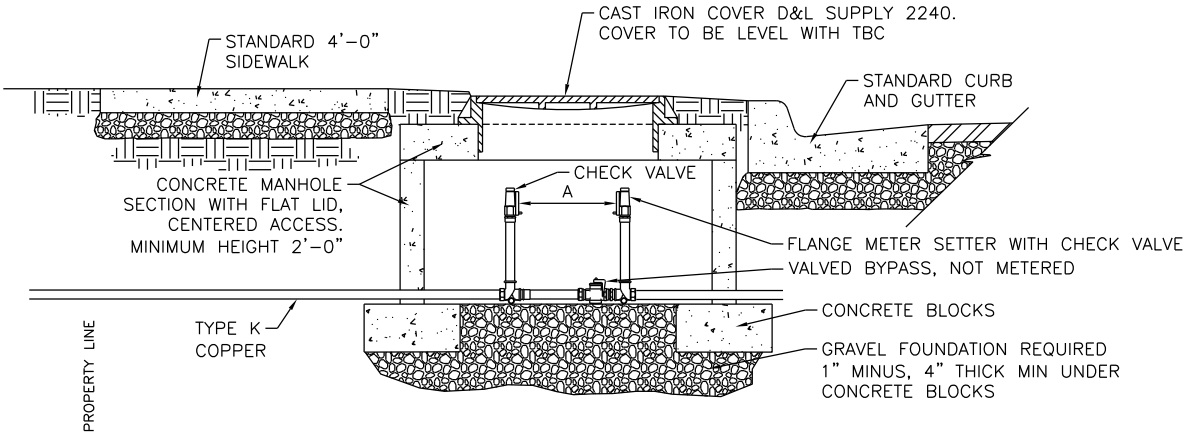

NOTE:
METER TO BE SUPPLIED AND INSTALLED BY CITY.

2 TYPICAL FLANGED METER SETTER WATER CONNECTION

SCALE:NOT TO SCALE

STATEMENT OF USE
THIS DOCUMENT AND ANY ILLUSTRATIONS HEREON ARE PROVIDED AS STANDARD CONSTRUCTION DETAILS WITHIN **SYRACUSE CITY.** DEVIATION FROM THIS DOCUMENT REQUIRES APPROVAL OF SYRACUSE CITY. SYRACUSE CITY CORPORATION CAN NOT BE HELD LIABLE FOR MISUSE OR CHANGES REGARDING THIS DOCUMENT.

NO.	REVISION DESCRIPTION	BY	APR.	DATE
1	CLARIFIED COPPER ON FLANGED METER SETTER	BB	RCW	2/11/14

CAD FILE: SYRACUSE CITY STANDARDS
DRAWN BY: BB
DESIGN BY: BB
CHECKED BY: RCW
LAST UPDATED: 2/11/2014
DATE ADOPTED: 2/11/2014

SYRACUSE EST. CITY 1935

DEVELOPMENT STANDARDS
SYRACUSE CITY CORPORATION

TYPICAL WATER SERVICE CONNECTION DETAIL

SHEET 8

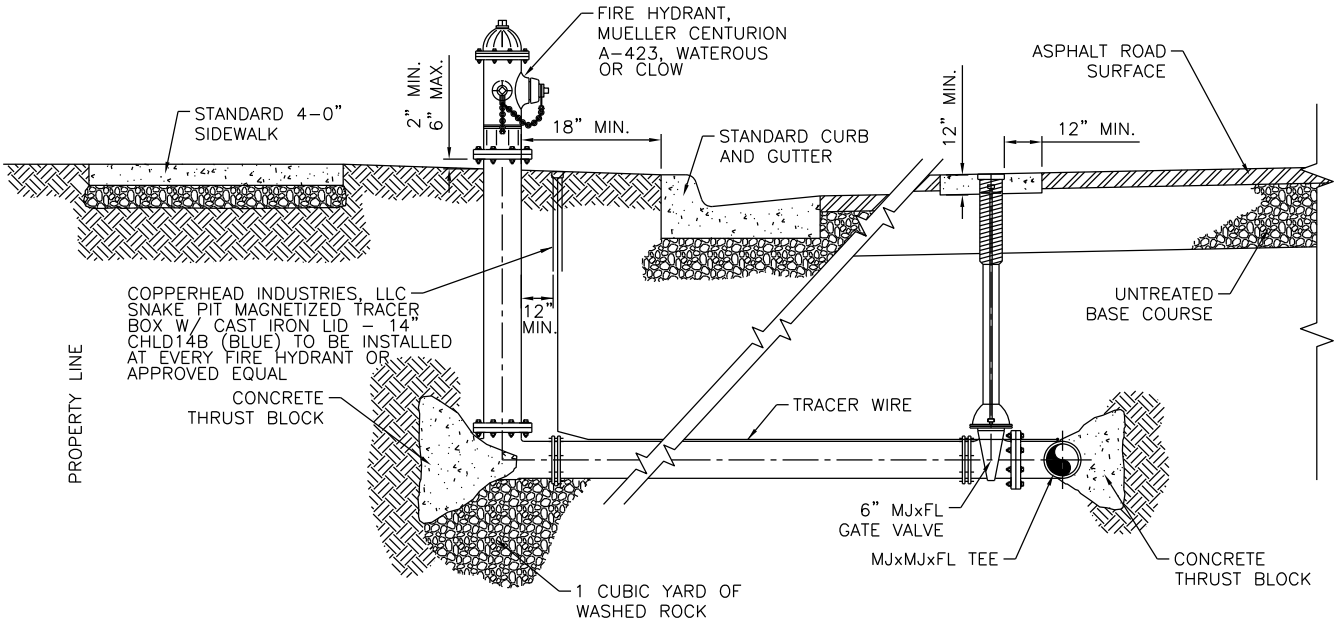

NOTES:
1. THRUST BLOCK SHALL NOT PLUG WEEP HOLES.
2. HYDRANT SHALL STAND PLUMB WITH PUMPER NOZZLE FACING THE STREET.
3. TYPICAL SPACING BETWEEN FIRE HYDRANTS IS 400 FEET.
4. HYDRANTS SHALL NOT BE LOCATED AT THE END OF A CUL-DE-SAC FACING THE TRAVEL PATH ENTERING THE CUL-DE-SAC.

2 TYPICAL FIRE HYDRANT CONNECTION DETAIL

SCALE:NOT TO SCALE

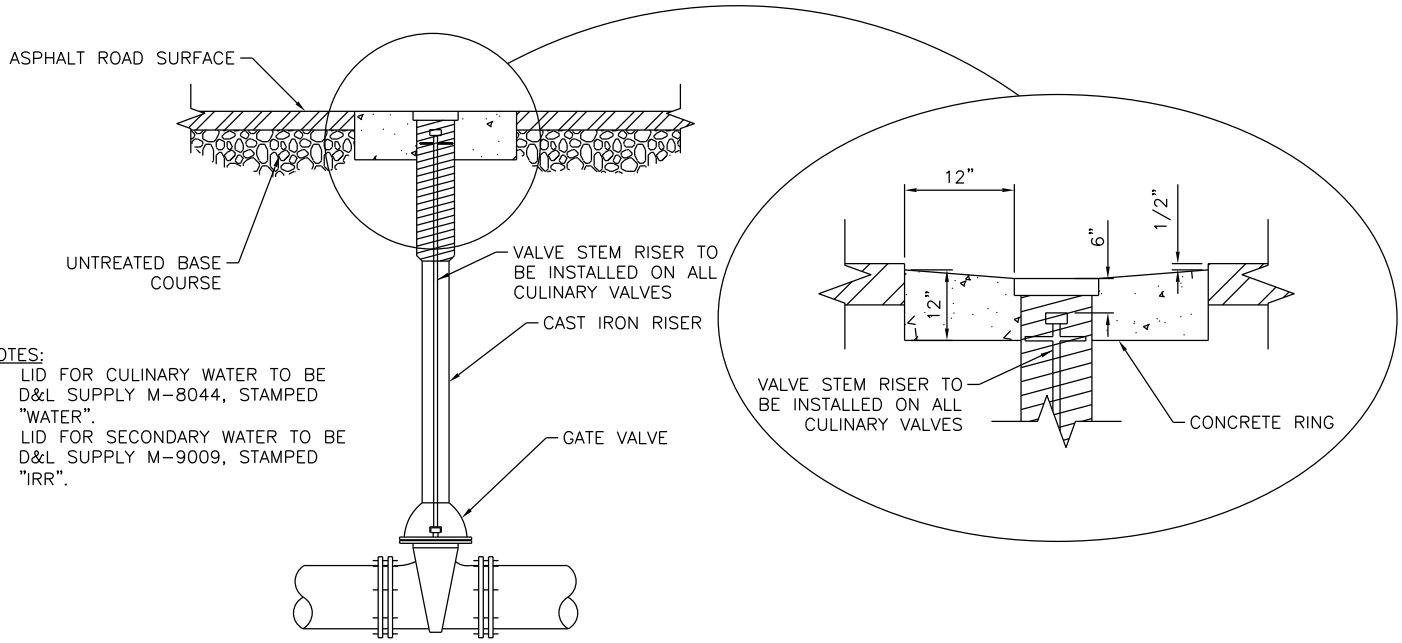

NOTES:
1. LID FOR CULINARY WATER TO BE D&L SUPPLY M-8044, STAMPED "WATER".
2. LID FOR SECONDARY WATER TO BE D&L SUPPLY M-9009, STAMPED "IRR".

1 TYPICAL WATER VALVE DETAIL

SCALE:NOT TO SCALE

STATEMENT OF USE
THIS DOCUMENT AND ANY ILLUSTRATIONS HEREON ARE PROVIDED AS STANDARD CONSTRUCTION DETAILS WITHIN **SYRACUSE CITY.** DEVIATION FROM THIS DOCUMENT REQUIRES APPROVAL OF SYRACUSE CITY. SYRACUSE CITY CORPORATION CAN NOT BE HELD LIABLE FOR MISUSE OR CHANGES REGARDING THIS DOCUMENT.

NO.	REVISION DESCRIPTION	BY	APR.	DATE
1	CLARIFIED VALVE STEM RISERS/ADDED TEST STATION	BB	RCW	2/11/14

CAD FILE: SYRACUSE CITY STANDARDS
DRAWN BY: BB
DESIGN BY: BB
CHECKED BY: RCW
LAST UPDATED: 2/11/2014
DATE ADOPTED: 2/11/2014

SYRACUSE CITY EST. 1935

DEVELOPMENT STANDARDS
SYRACUSE CITY CORPORATION

TYPICAL FIRE HYDRANT CONNECTION DETAIL

SHEET 9

GENERAL NOTES:

1. ALL STRUCTURAL CONCRETE SHALL DEVELOP A MINIMUM COMPRESSIVE STRENGTH OF 4,000 PSI IN 28 DAYS.
2. REINFORCEMENT STEEL SHALL BE DEFORMED BARS CONFORMING IN QUALITY TO THE REQUIREMENTS OF ASTM DESIGNATION A-615, GRADE 60, INCLUDING SUPPLEMENTARY REQUIREMENTS (S1).
3. ALL DETAILING, FABRICATION AND PLACING OF REINFORCING BARS SHALL BE IN ACCORDANCE WITH THE "MANUAL OF STANDARD PRACTICE FOR DETAILING REINFORCED CONCRETE STRUCTURES" ACI-315, LATEST EDITION.
4. TOLERANCES IN PLACING REINFORCEMENT SHALL BE:
   ±⅜ INCH FOR MEMBERS WITH D < 8 INCHES
   ±½ INCH FOR MEMBERS WITH D >= 8 INCHES
5. DOWELS, PIPES, WATERSTOPS AND OTHER INSTALLED MATERIALS AND ACCESSORIES SHALL BE HELD SECURELY IN POSITION WHILE CONCRETE IS BEING PLACED.
6. UNLESS OTHERWISE SHOWN, ASIDE FROM NORMAL ACCESSORIES USED TO HOLD REINFORCING BARS FIRMLY IN POSITION, THE FOLLOWING SHALL BE ADDED:
   A. IN SLABS #5 RISER BARS AT 36 INCHES O.C. MAXIMUM TO SUPPORT TOP REINFORCING BARS.
   B. IN WALLS WITH 2 CURTAINS #3 U OR Z SHAPE SPACES AT 6 FEET O.C. EACH WAY.
7. METAL CLIPS OR SUPPORTS SHALL NOT BE PLACED IN CONTACT WITH THE FORMS OR THE SUBGRADE. CONCRETE BLOCKS (OR DOBBIES) SUPPORTING BARS ON SUBGRADE SHALL BE IN SUFFICIENT NUMBERS TO SUPPORT THE BARS WITHOUT SETTLEMENT, BUT IN NO CASE SHALL SUCH SUPPORT BE CONTINUOUS.
8. DOWELS SHALL BE WIRED OR OTHERWISE HELD IN POSITION. THEY SHALL NOT BE SHOVED INTO FRESHLY PLACED CONCRETE.
9. REINFORCED BARS AND ACCESSORIES SHALL NOT BE IN CONTACT WITH ANY PIPE, PIPE FLANGE OR METAL PARTS EMBEDDED IN CONCRETE, A MINIMUM OF 2 INCHES CLEARANCE SHALL BE PROVIDED AT ALL TIMES.
10. STRUCTURES SHALL BE BACKFILLED WITH GRANULAR SOIL.
11. ALL CONSTRUCTION JOINTS SHALL BE ROUGHED AND CLEANED AND FREE OF LAITANCE.
12. STRUCTURES HAVE BEEN DESIGNED FOR THE FOLLOWING; IF CONDITIONS ARE EXCEEDED THE ENGINEER SHALL BE NOTIFIED.
    A. AASHTO HS-20 TRUCK LOAD
    B. 1'-6" MAX. SOIL ABOVE THE ROOF OF THE STRUCTURE
    C. GROUND WATER TO TOP OF STRUCTURE
    D. "AT-REST" LATERAL SOIL PRESSURE OF 60 PCF FOR DRY SOIL CONDITIONS AND 92.4 PCF WHEN GROUND WATER IS PRESENT

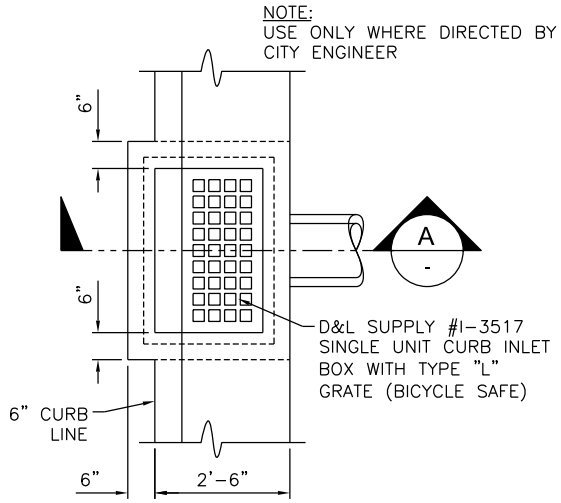

PLAN

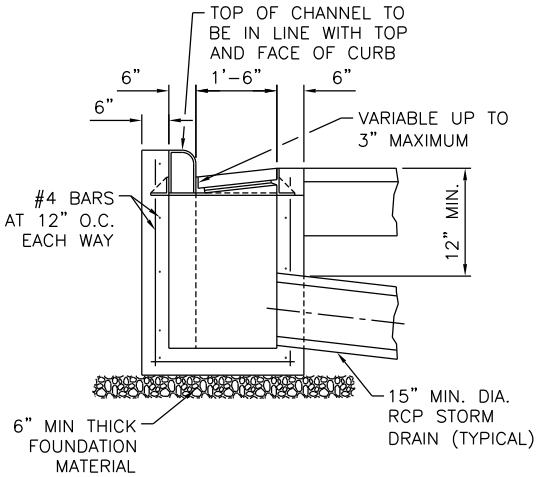

SECTION A

1 ALTERNATE CATCH BASIN

SCALE: NOT TO SCALE

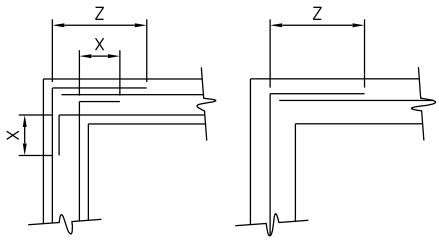

BAR SIZE	X	Z
#4	8"	1'-8"
#5	10"	2'-2"

2 HORIZONTAL REINFORCEMENT AT WALL INTERSECTION

SCALE: NOT TO SCALE

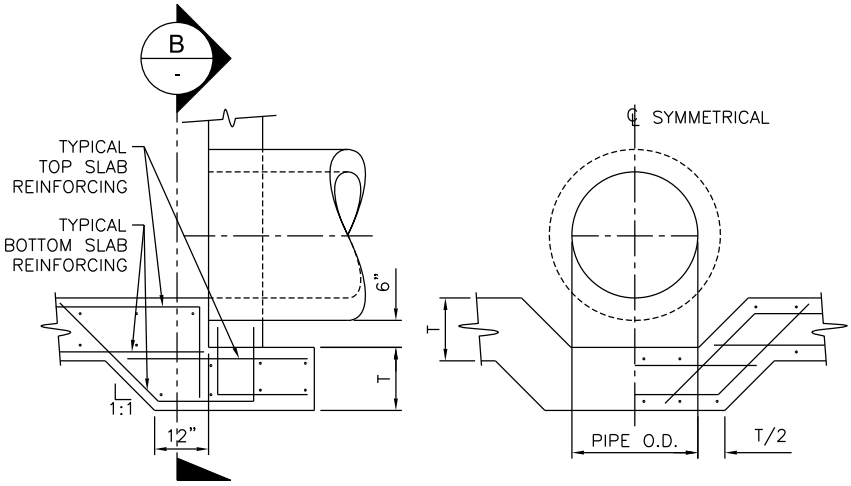

SECTION THRU PIPE

SECTION B

3 OPTIONAL FOOTING DETAIL AT WALL PIPE CONNECTION

SCALE: NOT TO SCALE

STATEMENT OF USE

THIS DOCUMENT AND ANY ILLUSTRATIONS HEREON ARE PROVIDED AS STANDARD CONSTRUCTION DETAILS WITHIN **SYRACUSE CITY.** DEVIATION FROM THIS DOCUMENT REQUIRES APPROVAL OF SYRACUSE CITY. SYRACUSE CITY CORPORATION CAN NOT BE HELD LIABLE FOR MISUSE OR CHANGES REGARDING THIS DOCUMENT.

NO.	REVISION DESCRIPTION	BY	APR.	DATE
1	CLARIFIED STANDARD CATCH BASIN TYPE	BB	RCW	2/11/14

CAD FILE: SYRACUSE CITY STANDARDS
DRAWN BY: BB
DESIGN BY: BB
CHECKED BY: RCW
LAST UPDATED: 2/11/2014
DATE ADOPTED: 2/11/2014

SYRACUSE CITY EST. 1935

DEVELOPMENT STANDARDS
SYRACUSE CITY CORPORATION

ALTERNATE CATCH BASIN

SHEET 10

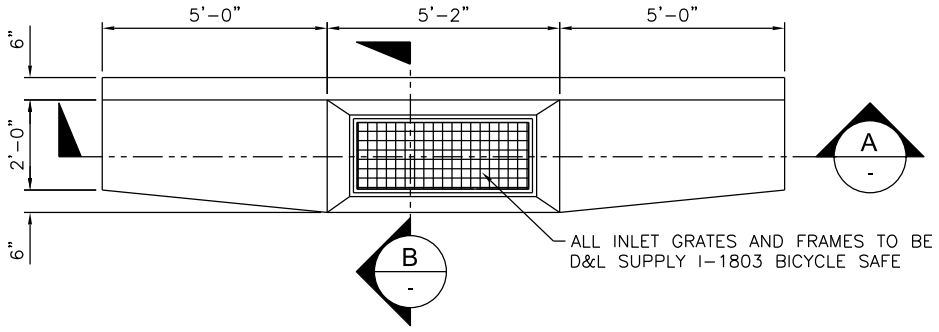

1 SINGLE CATCH BASIN PLAN

SCALE: NOT TO SCALE

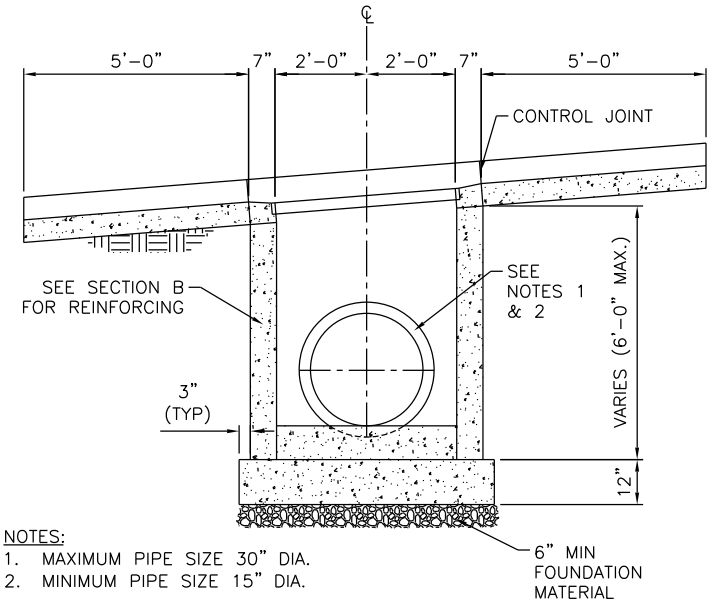

NOTES:
1. MAXIMUM PIPE SIZE 30" DIA.
2. MINIMUM PIPE SIZE 15" DIA.

A SECTION

SCALE: NOT TO SCALE

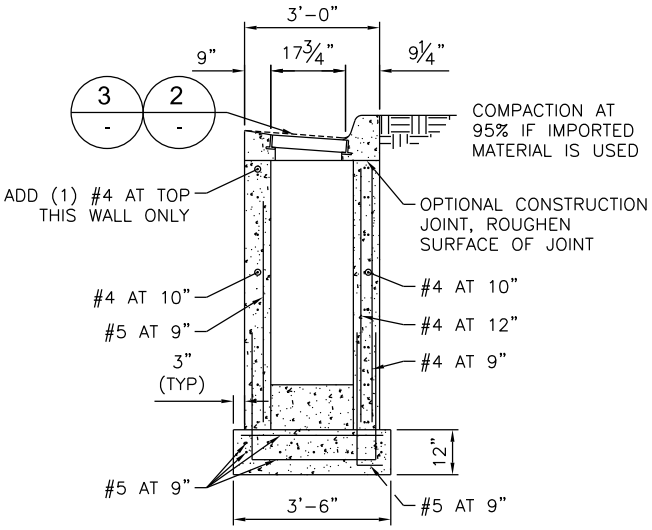

B SECTION

SCALE: NOT TO SCALE

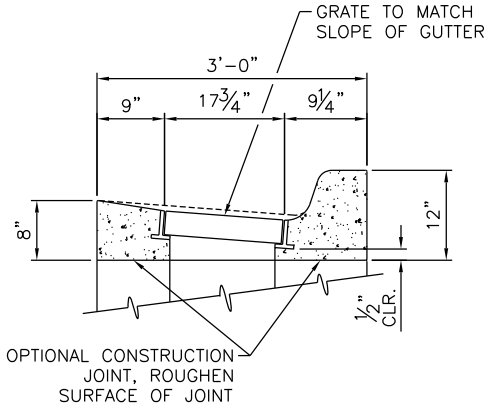

2 STANDARD CURB AND GUTTER INLET DETAIL

SCALE: NOT TO SCALE

STATEMENT OF USE

THIS DOCUMENT AND ANY ILLUSTRATIONS HEREON ARE PROVIDED AS STANDARD CONSTRUCTION DETAILS WITHIN **SYRACUSE CITY**. DEVIATION FROM THIS DOCUMENT REQUIRES APPROVAL OF SYRACUSE CITY. SYRACUSE CITY CORPORATION CAN NOT BE HELD LIABLE FOR MISUSE OR CHANGES REGARDING THIS DOCUMENT.

NO.	REVISION DESCRIPTION	BY	APR.	DATE
1	CLARIFIED STANDARD CATCH BASIN TYPE	BB	RCW	2/11/14

CAD FILE: SYRACUSE CITY STANDARDS
DRAWN BY: BB
DESIGN BY: BB
CHECKED BY: RCW
LAST UPDATED: 2/11/2014
DATE ADOPTED: 2/11/2014

SYRACUSE CITY EST. 1935

DEVELOPMENT STANDARDS
SYRACUSE CITY CORPORATION

STANDARD CATCH BASIN

SHEET 11

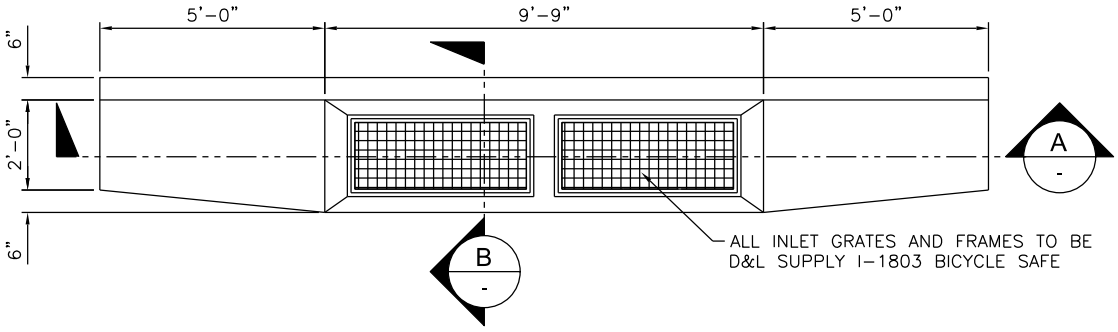

1 DOUBLE CATCH BASIN PLAN

SCALE:NOT TO SCALE

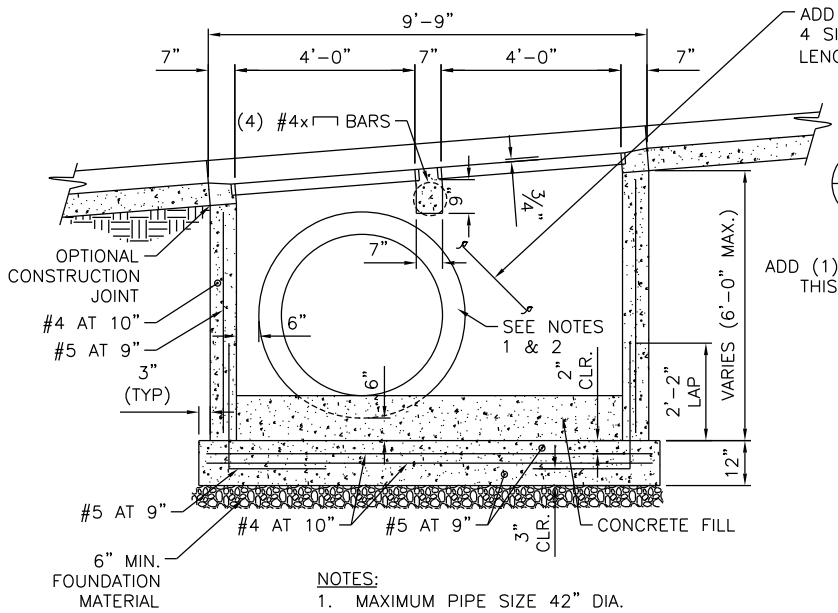

NOTES:

1. MAXIMUM PIPE SIZE 42" DIA.
2. MINIMUM PIPE SIZE 15" DIA.

A SECTION

SCALE:NOT TO SCALE

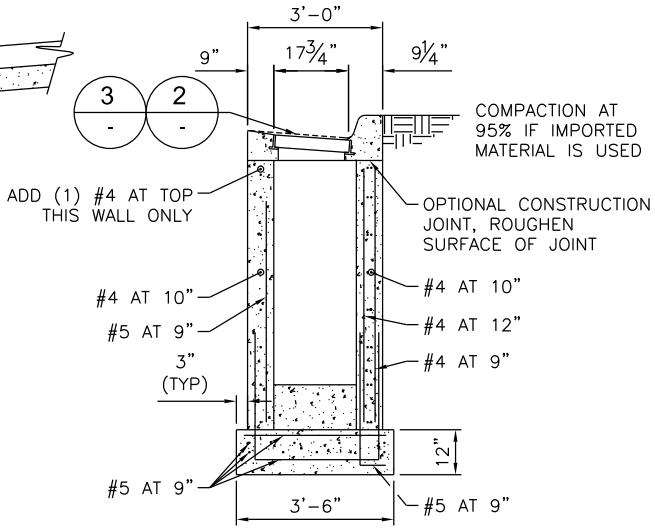

B SECTION

SCALE:NOT TO SCALE

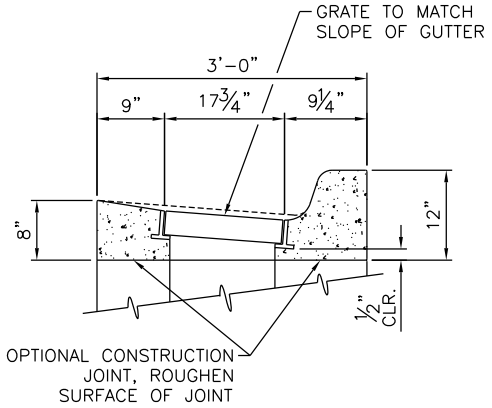

2 CURB AND GUTTER INLET DETAIL

SCALE:NOT TO SCALE

STATEMENT OF USE

THIS DOCUMENT AND ANY ILLUSTRATIONS HEREON ARE PROVIDED AS STANDARD CONSTRUCTION DETAILS WITHIN **SYRACUSE CITY**. DEVIATION FROM THIS DOCUMENT REQUIRES APPROVAL OF SYRACUSE CITY. SYRACUSE CITY CORPORATION CAN NOT BE HELD LIABLE FOR MISUSE OR CHANGES REGARDING THIS DOCUMENT.

NO.	REVISION DESCRIPTION	BY	APR.	DATE
1	CLARIFIED STANDARD CATCH BASIN TYPE	BB	RCW	2/11/14

CAD FILE: SYRACUSE CITY STANDARDS
DRAWN BY: BB
DESIGN BY: BB
CHECKED BY: RCW
LAST UPDATED: 2/11/2014
DATE ADOPTED: 2/11/2014

SYRACUSE CITY EST. 1935

DEVELOPMENT STANDARDS
SYRACUSE CITY CORPORATION

STANDARD DOUBLE CATCH BASIN

SHEET 12

PIPE SIZE (IN.)	USE LARGEST PIPE SIZE FOR THESE DIMENSIONS AND REBAR EXCEPT DIMENSION "Y"									
	"X" "Y"	"Z"	"T"	"A"	"B"	"C"	"D"	"E"	"F"	"G"
18	3'–0"	3'–3"	6"	#4 @ 12"	---	---	#5 @ 9"	#4 @ 12"	#4 @ 12"	#5 @ 9"
21	3'–3"	3'–6"	6"	#4 @ 12"	---	---	#5 @ 9"	#4 @ 12"	#4 @ 12"	#5 @ 9"
24	3'–6"	3'–9"	6"	#4 @ 12"	---	---	#5 @ 9"	#4 @ 12"	#4 @ 12"	#5 @ 9"
27	3'–9"	4'–0"	6"	#4 @ 12"	---	---	#5 @ 9"	#4 @ 12"	#4 @ 12"	#5 @ 9"
30	4'–2"	4'–5"	6"	#4 @ 12"	---	---	#5 @ 9"	#4 @ 12"	#4 @ 12"	#5 @ 9"
33	4'–5"	4'–8"	6"	#4 @ 12"	---	---	#5 @ 9"	#4 @ 12"	#4 @ 12"	#5 @ 9"
36	4'–8"	4'–11"	6"	#4 @ 12"	---	---	#5 @ 9"	#4 @ 12"	#4 @ 12"	#5 @ 9"
42	5'–3"	5'–6"	6"	#4 @ 12"	---	---	#5 @ 9"	#4 @ 12"	#4 @ 12"	#5 @ 9"
48	5'–10"	6'–1"	10"	#4 @ 12"	#5 @ 12"	#4 @ 12"	---	---	#4 @ 12"	#5 @ 12"
54	6'–5"	6'–8"	10"	#4 @ 12"	#5 @ 12"	#4 @ 12"	---	---	#4 @ 12"	#5 @ 12"
60	7'–0"	7'–3"	10"	#4 @ 12"	#5 @ 12"	#4 @ 12"	---	---	#4 @ 12"	#5 @ 12"
66	7'–7"	8'–10"	10"	#4 @ 12"	#5 @ 12"	#4 @ 12"	---	---	#4 @ 9"	#5 @ 12"
72	8'–2"	9'–5"	10"	#4 @ 12"	#5 @ 12"	#4 @ 12"	---	---	#4 @ 9"	#5 @ 12"

NOTE:

1. THE "H" REBAR IS BASED ON THE SMALLER PIPE. WHEN THE SMALLER PIPE IS 18" TO 36" USE #4 AT 6". WHEN THE SMALLER PIPE IS 42" TO 60" USE #5 AT 6". WHEN THE SMALLER PIPE IS 66" OR 72" USE #6 AT 6".
2. WALL THICKNESS IS BASED ON THE LARGEST OF THE PIPES. FOR 10" WALLS, USE 2 LAYERS OF STEEL. FOR 6" WALLS, USE A SINGLE LAYER OF STEEL.
3. WHEN "Z" IS LESS THAN 4'–0", THE VERTICAL REBAR LAP BE ELIMINATED AND DOWELS EXTENDED TO THE TOP OF THE WALL.

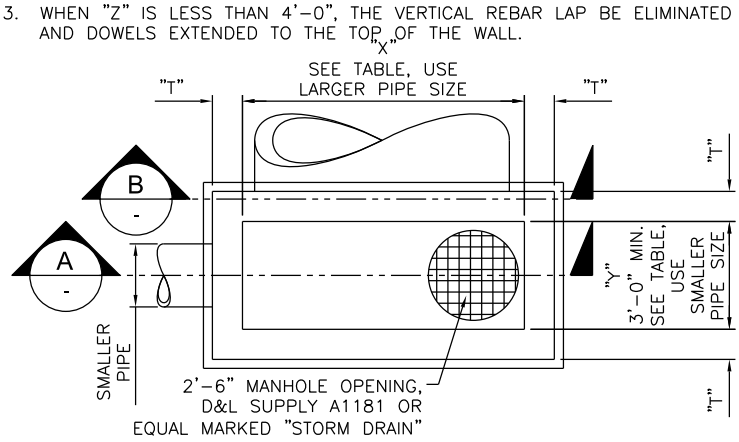

1 STANDARD CLEANOUT PLAN VIEW

SCALE:NOT TO SCALE (TYPE 1)

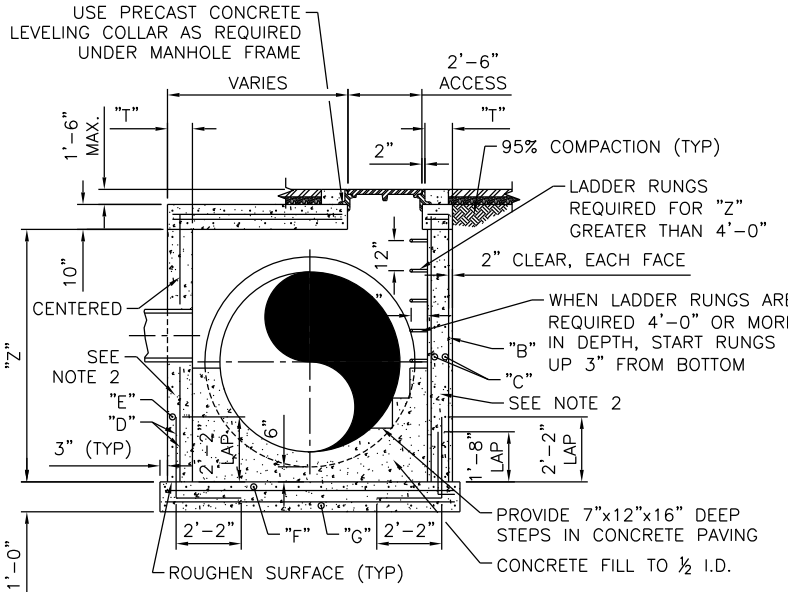

A STANDARD CLEANOUT SECTION

SCALE:NOT TO SCALE

GENERAL NOTES:

1. ALL STRUCTURAL CONCRETE SHALL DEVELOP A MINIMUM COMPRESSIVE STRENGTH OF 4,000 PSI IN 28 DAYS.
2. REINFORCEMENT STEEL SHALL BE DEFORMED BARS CONFORMING IN QUALITY TO THE REQUIREMENTS OF ASTM DESIGNATION A–615, GRADE 60, INCLUDING SUPPLEMENTARY REQUIREMENTS (S1).
3. ALL DETAILING, FABRICATION AND PLACING OF REINFORCING BARS SHALL BE IN ACCORDANCE WITH THE "MANUAL OF STANDARD PRACTICE FOR DETAILING REINFORCED CONCRETE STRUCTURES ACI–315, LATEST EDITION.
4. TOLERANCES IN PLACING REINFORCEMENT SHALL BE:
   ±⅜ INCH FOR MEMBERS WITH D < 8 INCHES
   ±½ INCH FOR MEMBERS WITH D ≥ 8 INCHCES
5. DOWELS, PIPES, WATERSTOPS AND OTHER INSTALLED MATERIALS AND ACCESSORIES SHALL BE HELD SECURELY IN POSITION WHILE CONCRETE IS BEING PLACED.
6. UNLESS OTHERWISE SHOWN, ASIDE FROM NORMAL ACCESSORIES USED TO HOLD REINFORCING BARS FIRMLY IN POSITION, THE FOLLOWING SHALL BE ADDED:
   A. IN SLABS #5 RISER BARS AT 36 INCHES O.C. MAXIMUM TO SUPPORT TOP REINFORCING BARS.
   B. IN WALLS WITH 2 CURTAINS #4 "U" OR "Z" SHAPE SPACES AT 6 FEET O.C. EACH WAY.
7. METAL CLIPS OR SUPPORTS SHALL NOT BE PLACED IN CONTACT WITH THE FORMS OF THE SUBGRADE. CONCRETE BLOCKS (OR DOBBIES) SUPPORTING BARS ON SUBGRADE SHALL BE IN SUFFICIENT NUMBERS TO SUPPORT THE BARS WITHOUT SETTLEMENT, BUT IN NO CASE SHALL SUCH SUPPORT BE CONTINUOUS.
8. DOWELS SHALL BE WIRED OR OTHERWISE HELD IN POSITION. THEY SHALL NOT BE SHOVED INTO FRESHLY PLACED CONCRETE.
9. REINFORCED BARS AND ACCESSORIES SHALL NOT BE IN CONTACT WITH ANY PIPE, PIPE FLANGE, OR METAL PARTS EMBEDDED IN CONCRETE. A MINIMUM OF 2 INCHES CLEARANCE SHALL BE PROVIDED AT ALL TIMES.
10. STRUCTURES SHALL BE BACKFILLED WITH GRANULAR SOIL.
11. ALL CONSTRUCTION JOINTS SHALL BE ROUGHED AND CLEANED AND FREE OF LAITANCE.
12. STRUCTURES HAVE BEEN DESIGNED FOR THE FOLLOWING; IF CONDITIONS ARE EXCEEDED THE ENGINEER SHALL BE NOTIFIED.
    A. AASHTO HS–20 TRUCK LOAD.
    B. 1'–6" MAX. SOIL ABOVE THE ROOF OF THE STRUCTURE.
    C. GROUND WATER TO TOP OF STRUCTURE.
    D. "AT–REST" LATERAL SOIL PRESSURE OF 60 PCF FOR DRY SOIL CONDITIONS AND 92.4 PCF WHEN GROUND WATER IS PRESENT.

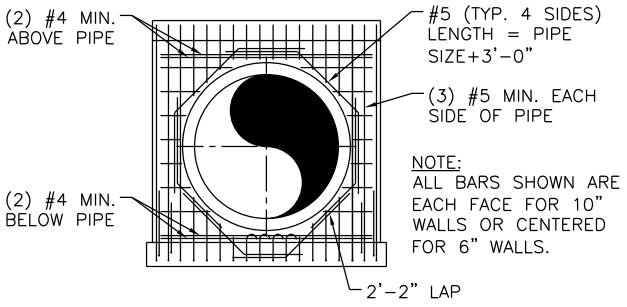

B STANDARD CLEANOUT SECTION

SCALE:NOT TO SCALE

STATEMENT OF USE
THIS DOCUMENT AND ANY ILLUSTRATIONS HEREON ARE PROVIDED AS STANDARD CONSTRUCTION DETAILS WITHIN **SYRACUSE CITY.** DEVIATION FROM THIS DOCUMENT REQUIRES APPROVAL OF SYRACUSE CITY. SYRACUSE CITY CORPORATION CAN NOT BE HELD LIABLE FOR MISUSE OR CHANGES REGARDING THIS DOCUMENT.

NO.	REVISION DESCRIPTION	BY	APR.	DATE

CAD FILE: SYRACUSE CITY STANDARDS
DRAWN BY: BB
DESIGN BY: BB
CHECKED BY: RCW
LAST UPDATED: 11/1/2011
DATE ADOPTED: 2/14/2012

SYRACUSE CITY EST. 1935

DEVELOPMENT STANDARDS
SYRACUSE CITY CORPORATION

STANDARD STORM DRAIN CLEANOUT

SHEET 13

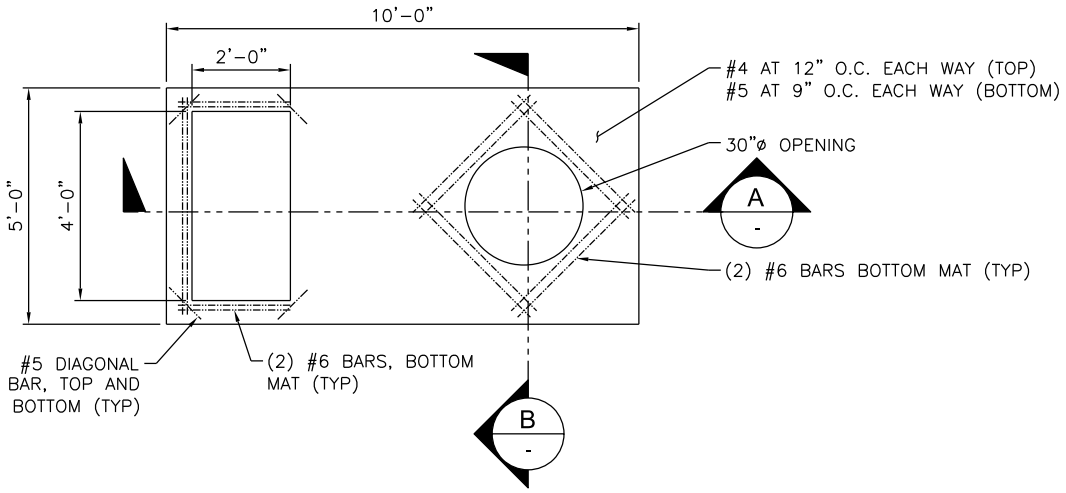

PLAN

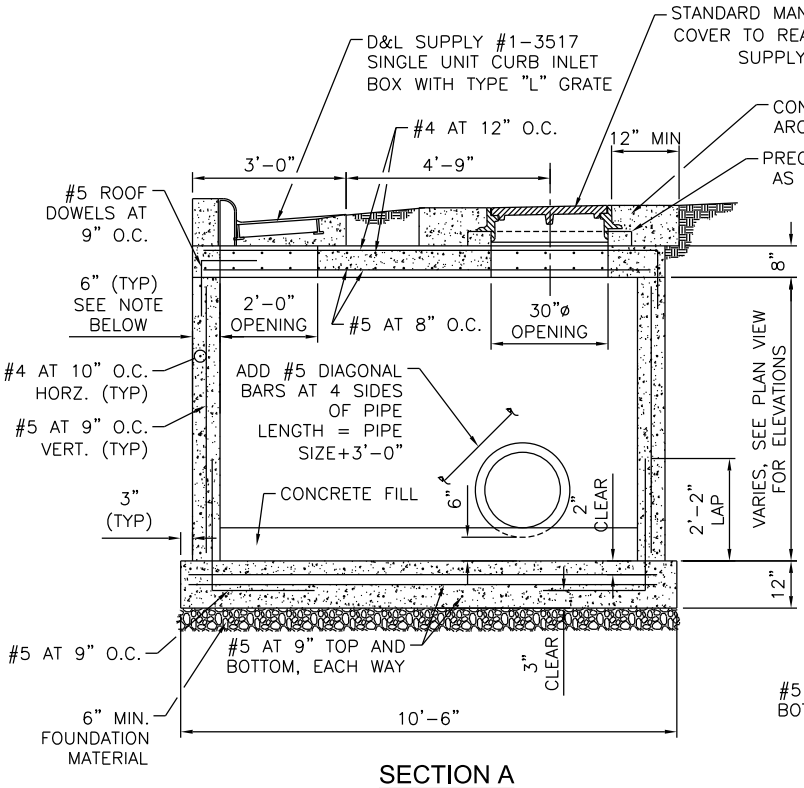

SECTION A

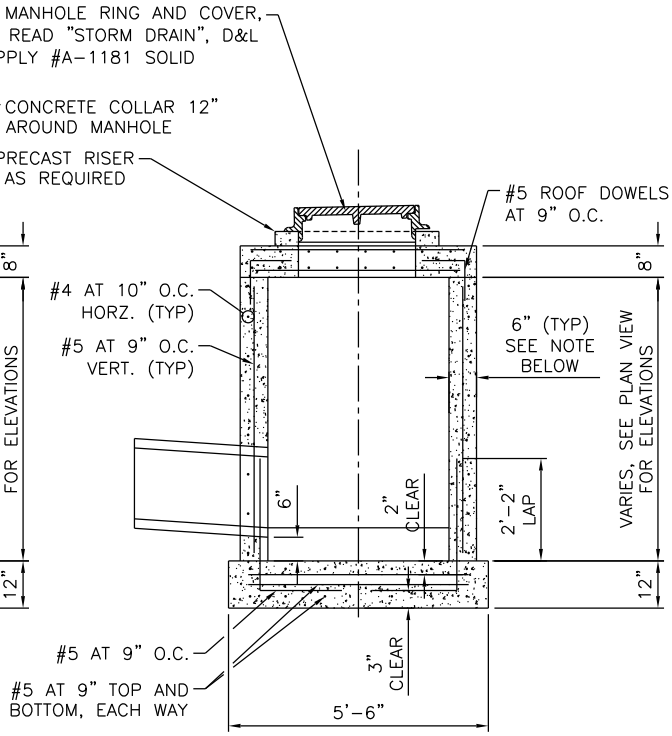

SECTION B

NOTE:
USE 6" THICK WALLS FOR WALL HEIGHT UP TO 5'-0". FOR WALL HEIGHT GREATER THAN 5'-0", USE 8" THICK WALLS.

1 COMBINATION INLET/CLEANOUT DETAIL

SCALE: NOT TO SCALE

STATEMENT OF USE
THIS DOCUMENT AND ANY ILLUSTRATIONS HEREON ARE PROVIDED AS STANDARD CONSTRUCTION DETAILS WITHIN **SYRACUSE CITY.** DEVIATION FROM THIS DOCUMENT REQUIRES APPROVAL OF SYRACUSE CITY. SYRACUSE CITY CORPORATION CAN NOT BE HELD LIABLE FOR MISUSE OR CHANGES REGARDING THIS DOCUMENT.

NO.	REVISION DESCRIPTION	BY	APR.	DATE

CAD FILE: SYRACUSE CITY STANDARDS
DRAWN BY: BB
DESIGN BY: BB
CHECKED BY: RCW
LAST UPDATED: 11/1/2011
DATE ADOPTED: 2/14/2012

SYRACUSE CITY EST. 1935

DEVELOPMENT STANDARDS
SYRACUSE CITY CORPORATION

TYPICAL COMBINATION INLET CLEANOUT

SHEET 14

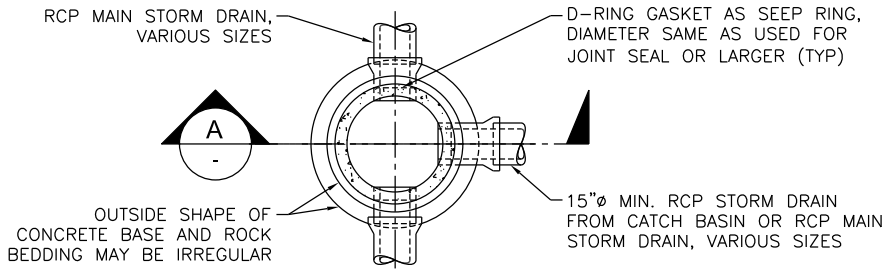

1 TYPICAL STORM DRAIN MANHOLE PLAN BELOW CONE

SCALE:NOT TO SCALE

NOTES:

1. MANHOLE WALL AND CONE SECTION SHALL CONFORM TO ASTM C-478.
2. LIFT HOLE SHALL BE FILLED WITH GROUT.
3. IF MANHOLES ARE TOO SHALLOW FOR CONE SECTION, USE FLAT CONCRETE LID INSTEAD.
4. STEPS @ 12" O.C. ARE REQUIRED IN MANHOLES GREATER THAN 54" DEEP. STEPS SHALL BE NON-CORRISIVE POLY PROPYLENE COATED STEEL AND CONFORM TO ASTM C-478.
5. MANHOLE CONE SHALL BE ECCENTRIC.
6. IF MANHOLE IS TOO SHALLOW FOR CONE SECTION, USE FLAT CONCRETE LID AS ALTERNATE.

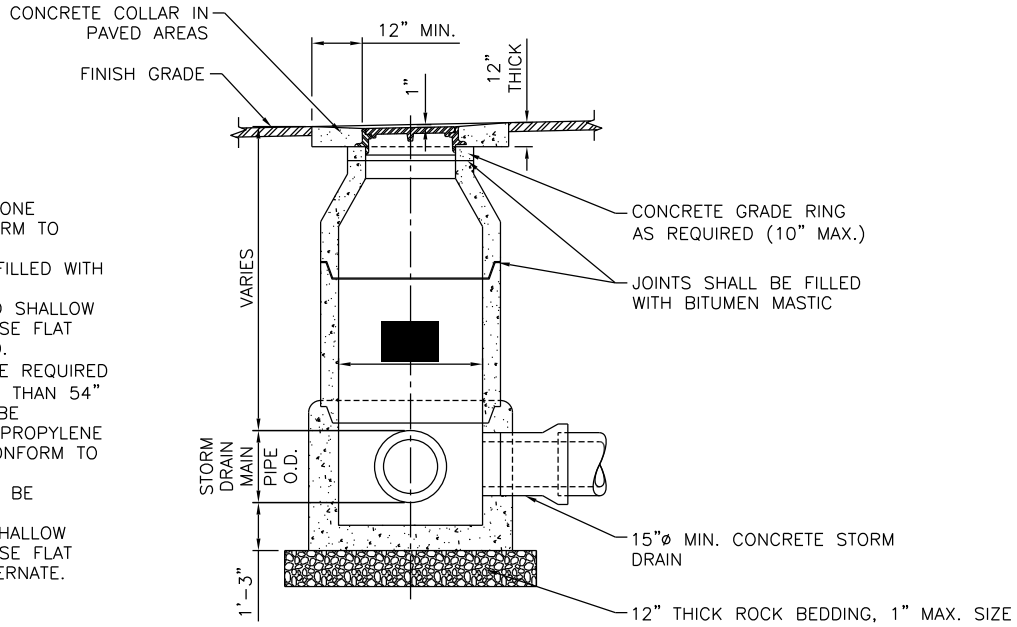

A TYPICAL STORM DRAIN MANHOLE SECTION

SCALE:NOT TO SCALE

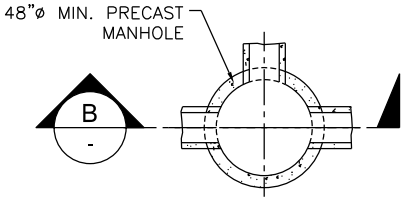

2 FLAT LID STORM DRAIN MANHOLE PLAN

SCALE:NOT TO SCALE

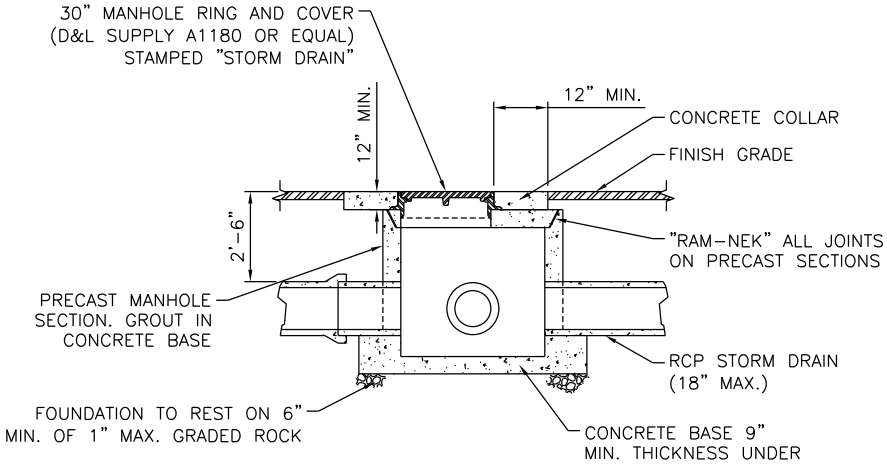

B FLAT LID STORM DRAIN MANHOLE SECTION

SCALE:NOT TO SCALE

STATEMENT OF USE

THIS DOCUMENT AND ANY ILLUSTRATIONS HEREON ARE PROVIDED AS STANDARD CONSTRUCTION DETAILS WITHIN **SYRACUSE CITY.** DEVIATION FROM THIS DOCUMENT REQUIRES APPROVAL OF SYRACUSE CITY. SYRACUSE CITY CORPORATION CAN NOT BE HELD LIABLE FOR MISUSE OR CHANGES REGARDING THIS DOCUMENT.

NO.	REVISION DESCRIPTION	BY	APR.	DATE

CAD FILE: SYRACUSE CITY STANDARDS
DRAWN BY: BB
DESIGN BY: BB
CHECKED BY: RCW
LAST UPDATED: 11/1/2011
DATE ADOPTED: 2/14/2012

SYRACUSE CITY EST. 1935

DEVELOPMENT STANDARDS
SYRACUSE CITY CORPORATION

STANDARD STORM DRAIN MANHOLES

SHEET 15

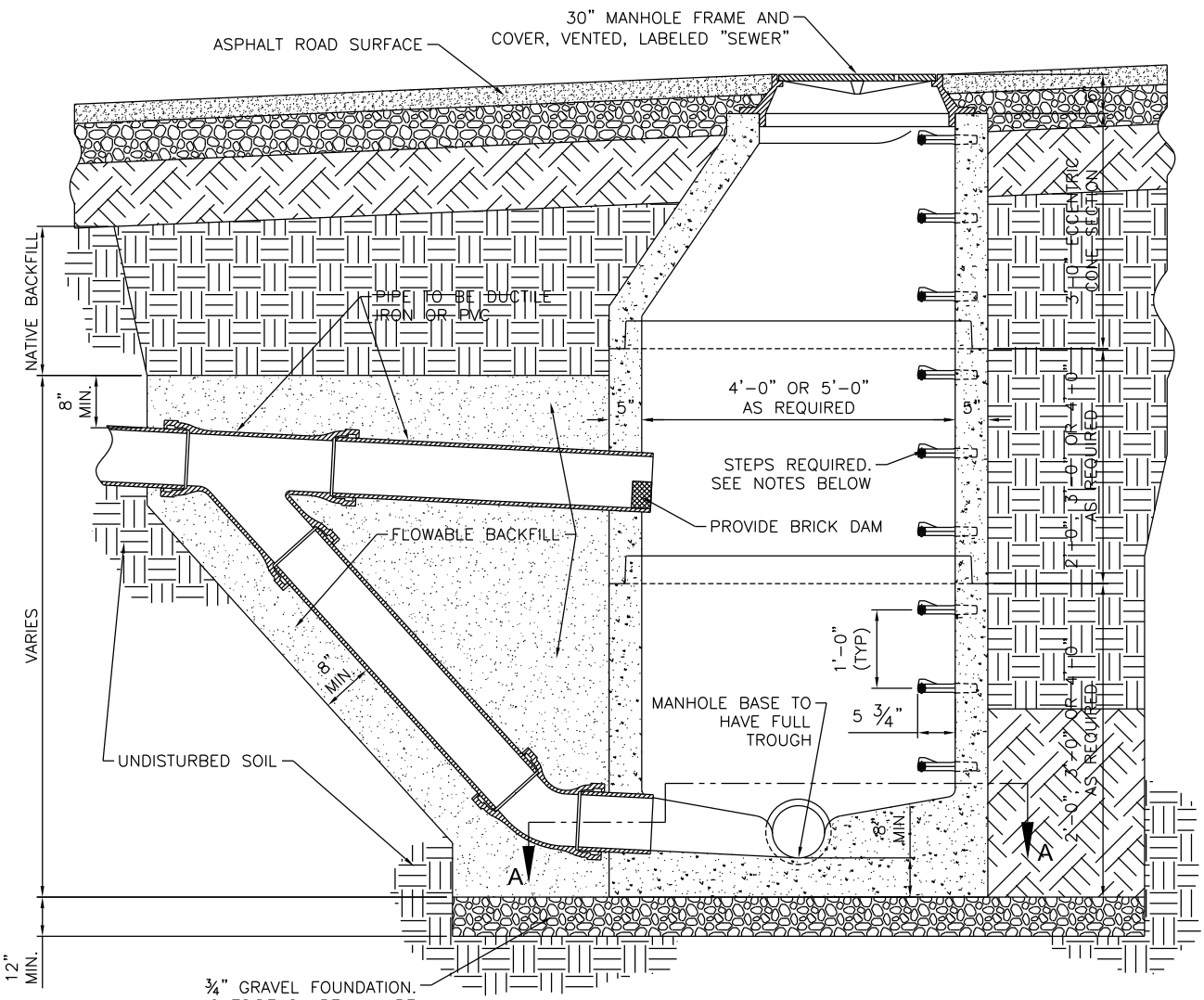

ELEVATION SECTION

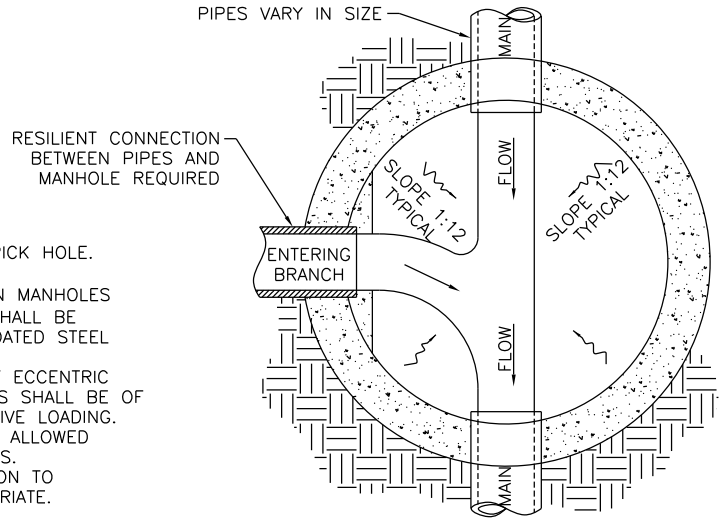

PLAN VIEW

NOTES:

1. MANHOLE COVER TO CONTAIN ONE PICK HOLE. D&L SUPPLY A1180 OR EQUAL.
2. STEPS @ 12" O.C. ARE REQUIRED IN MANHOLES GREATER THEN 54" DEEP. STEPS SHALL BE NON-CORROSIVE POLYPROPYLENE COATED STEEL AND CONFORM TO ASTM C-478.
3. FLAT LIDS MAY BE USED IN LIEU OF ECCENTRIC CONES WHERE NECESSARY. FLAT LIDS SHALL BE OF ECCENTRIC DESIGN AND MEET H20 LIVE LOADING. NO FLAT RING AND COVERS WILL BE ALLOWED UNLESS APPROVED BY PUBLIC WORKS.
4. USE FERNCO COUPLING TO TRANSITION TO CONCRETE OR PVC PIPE AS APPROPRIATE.

1 TYPICAL DROP MANHOLE DETAIL

SCALE: NOT TO SCALE

STATEMENT OF USE
THIS DOCUMENT AND ANY ILLUSTRATIONS HEREON ARE PROVIDED AS STANDARD CONSTRUCTION DETAILS WITHIN **SYRACUSE CITY.** DEVIATION FROM THIS DOCUMENT REQUIRES APPROVAL OF SYRACUSE CITY. SYRACUSE CITY CORPORATION CAN NOT BE HELD LIABLE FOR MISUSE OR CHANGES REGARDING THIS DOCUMENT.

NO.	REVISION DESCRIPTION	BY	APR.	DATE

CAD FILE: SYRACUSE CITY STANDARDS
DRAWN BY: BB
DESIGN BY: BB
CHECKED BY: RCW
LAST UPDATED: 11/1/2011
DATE ADOPTED: 2/14/2012

SYRACUSE CITY EST. 1935

DEVELOPMENT STANDARDS
SYRACUSE CITY CORPORATION

TYPICAL DROP MANHOLE

SHEET 16

LATERAL NOTES:

1. CLEANOUTS ARE REQUIRED AT A MAXIMUM OF 100'-0" SPACING ALONG LATERALS AND AT EACH SERIES OF BENDS AMOUNTING TO 90°.
2. CLEANOUTS MUST BE LOCATED AT PROPERTY LINE AND WITHIN 5' OUTSIDE OF A FOUNDATION WALL.
3. TAPS ON EXISTING MAIN SHALL BE CORED AND ROMAC SEWER SADDLE WITH STAINLESS STEEL BANDS OR APPROVED EQUAL.
4. SANITARY SEWER LATERALS TO BE GREEN PVC, TO DIFFERENTIATE FROM WHITE LAND DRAIN LATERALS.
5. CONTRACTOR TO EXTEND LATERAL 10'-0" BEYOND PROPERTY LINE. MARK END WITH 2x4, PAINTED GREEN FOR SEWER, WHITE FOR LAND DRAIN.
6. LOCATION OF AS-BUILT LATERALS AND CLEANOUTS MUST BE PROVIDED TO THE CITY ENGINEER.
7. RAIN GUTTER DOWN SPOUTS AND SURFACE INLET CONNECTIONS TO LATERAL ARE PROHIBITED.

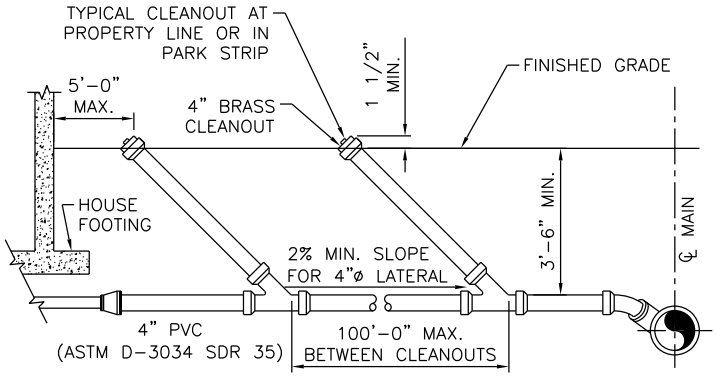

1 PROFILE OF TYPICAL LATERAL

SCALE:NOT TO SCALE

**SEWER MANHOLES SHALL BE VENTED & LABELED "SEWER"
LAND DRAIN MANHOLES SHALL BE NON-VENTED & LABELED "LAND DRAIN"

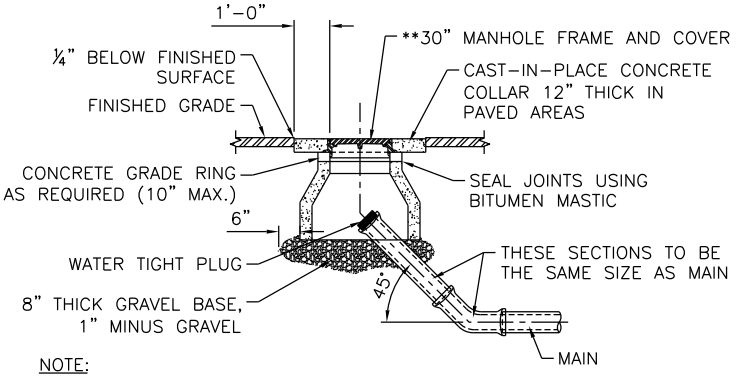

NOTE:
GRAVEL BASE TO BE 12" LARGER THAN OUTSIDE DIAMETER OF MANHOLE CONE.

2 TEMPORARY MAIN CLEANOUT

SCALE:NOT TO SCALE

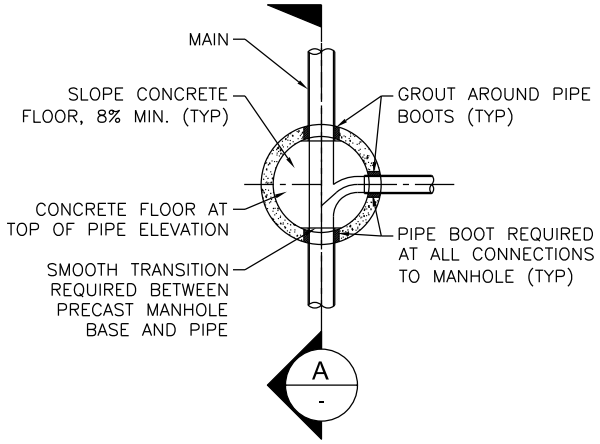

3 MANHOLE PLAN BELOW CONE

SCALE:NOT TO SCALE

*SEWER MANHOLES SHALL BE VENTED & LABELED "SEWER"
LAND DRAIN MANHOLES SHALL BE NON-VENTED & LABELED "LAND DRAIN"

MANHOLE NOTES:

1. INVERT ELEVATION DROP BETWEEN INFLOW AND OUTFLOW SHALL BE 0.20 FT MIN.
2. MANHOLE WALL AND CONE SECTION SHALL CONFORM TO ASTM C-478.
3. MANHOLE SHALL BE 5'-0"ø IF MAIN IS GREATER THAN 12"ø, OR IF MORE THAN THREE MAIN PIPES CONNECT TO MANHOLE, OR IF OTHERWISE SPECIFIED ON DRAWINGS.
4. LIFT HOLES SHALL BE FILLED WITH GROUT.
5. MANHOLE CONE SHALL BE ECCENTRIC.
6. STEPS @ 12" O.C.C ARE REQUIRED IN MANHOLES GREATER THEN 54" DEEP. STEPS SHALL BE NON-CORROSIVE POLYPROPYLENE COATED STEEL AND CONFORM TO ASTM C-478.
7. IF MANHOLES ARE TOO SHALLOW FOR CONE SECTION, USE FLAT CONCRETE LID INSTEAD.

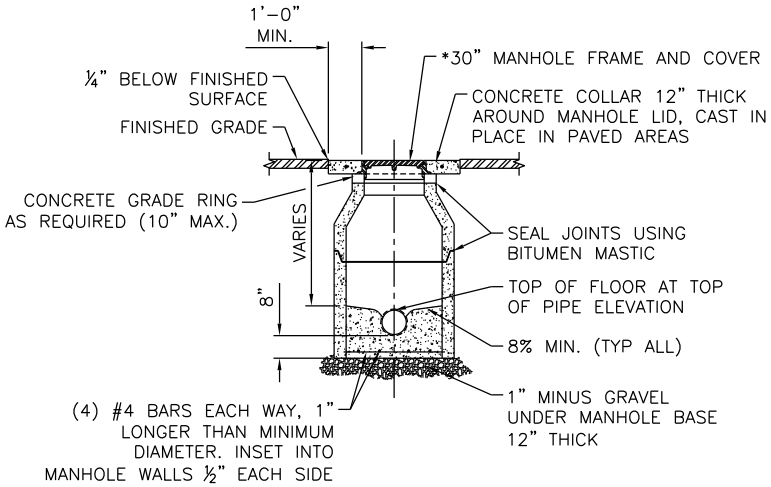

A TYPICAL MANHOLE SECTION

SCALE:NOT TO SCALE

STATEMENT OF USE
THIS DOCUMENT AND ANY ILLUSTRATIONS HEREON ARE PROVIDED AS STANDARD CONSTRUCTION DETAILS WITHIN **SYRACUSE CITY**. DEVIATION FROM THIS DOCUMENT REQUIRES APPROVAL OF SYRACUSE CITY. SYRACUSE CITY CORPORATION CAN NOT BE HELD LIABLE FOR MISUSE OR CHANGES REGARDING THIS DOCUMENT.

NO.	REVISION DESCRIPTION	BY	APR.	DATE
1	CLARIFIED VENTED LIDS	BB	RCW	2/11/14

CAD FILE: SYRACUSE CITY STANDARDS
DRAWN BY: BB
DESIGN BY: BB
CHECKED BY: RCW
LAST UPDATED: 2/11/2014
DATE ADOPTED: 2/11/2014

SYRACUSE CITY EST. 1935

DEVELOPMENT STANDARDS
SYRACUSE CITY CORPORATION

SEWER AND LAND DRAIN STANDARDS

SHEET 17

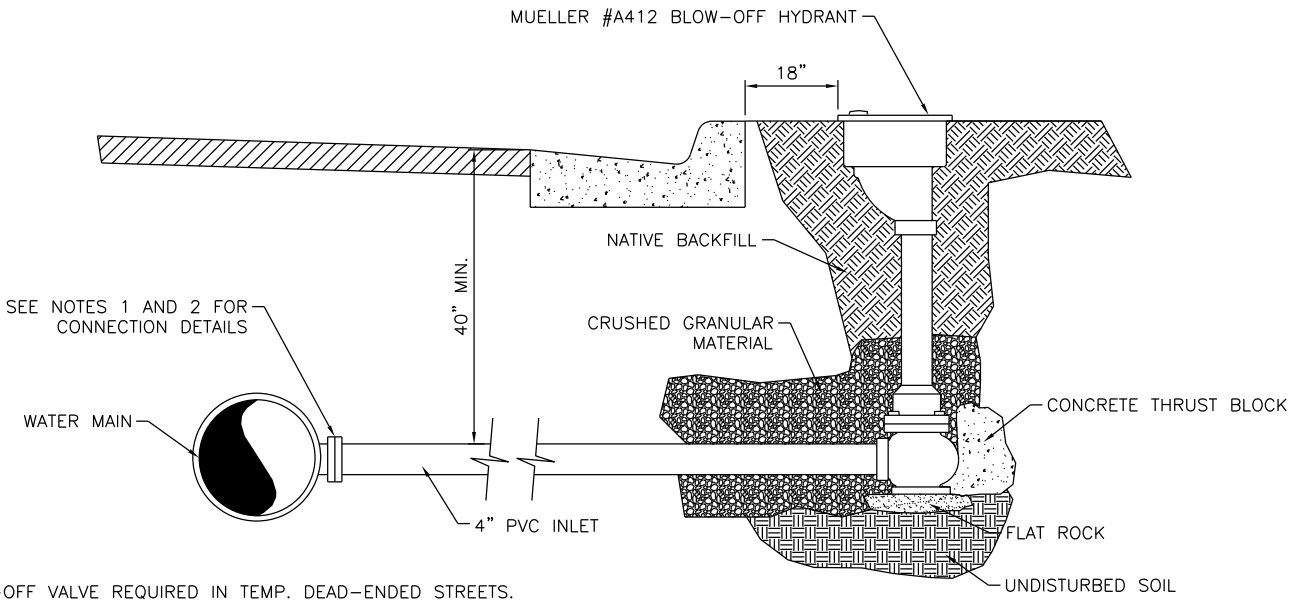

NOTES:
1. BLOW-OFF VALVE REQUIRED IN TEMP. DEAD-ENDED STREETS.
2. CUL-DE-SAC CONNECTIONS TO BE MADE USING MAIN SIZE x 4" MJ REDUCER.
3. ON TEMPORARILY DEAD-ENDED STREETS CONNECTIONS SHALL BE MADE USING MAIN SIZE x 4" MJ TEE.

1 TYPICAL BLOWOFF VALVE DETAIL

SCALE:NOT TO SCALE

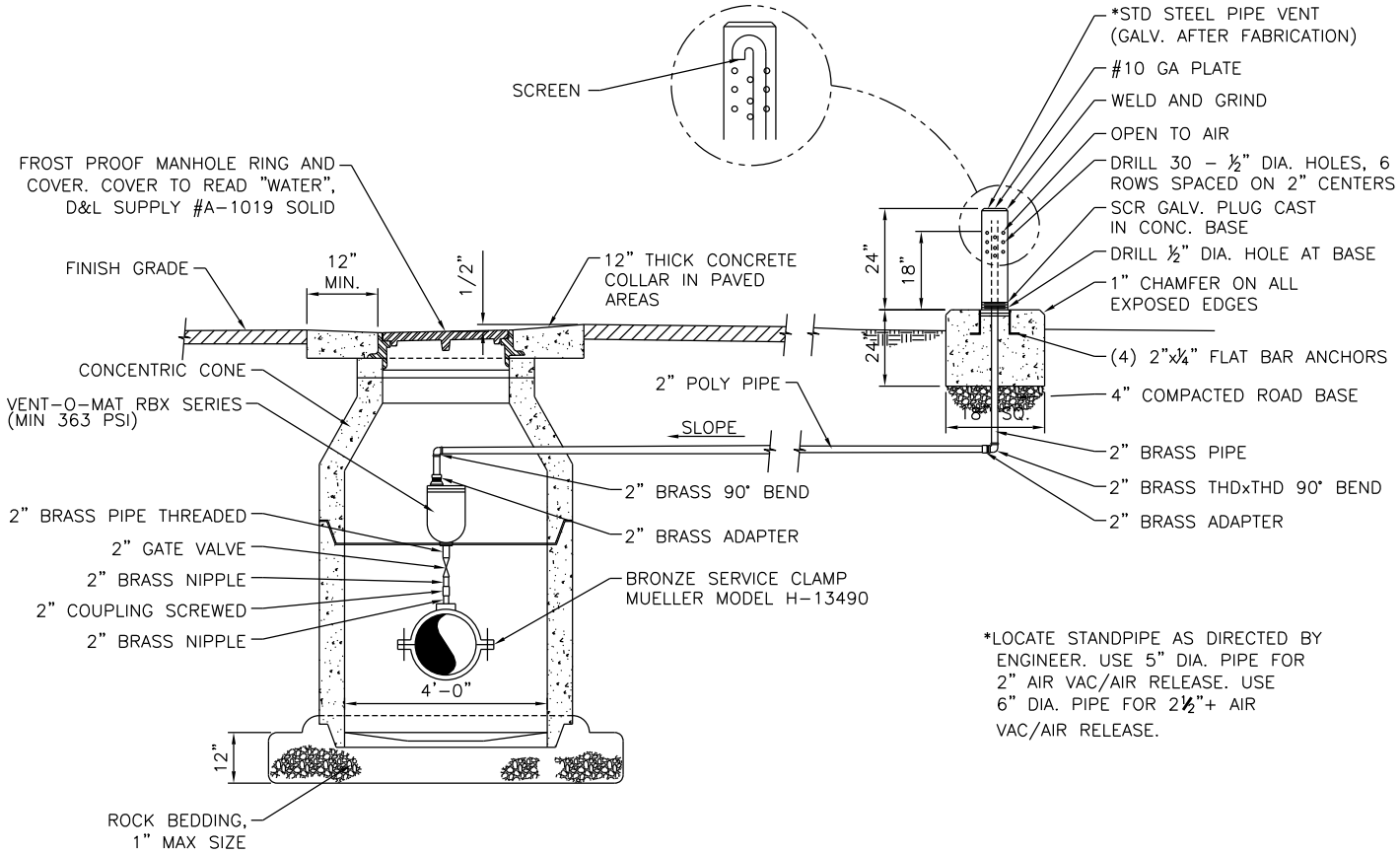

*LOCATE STANDPIPE AS DIRECTED BY ENGINEER. USE 5" DIA. PIPE FOR 2" AIR VAC/AIR RELEASE. USE 6" DIA. PIPE FOR 2½"+ AIR VAC/AIR RELEASE.

2 TYPICAL 2" AIR RELEASE VALVE MANHOLE AND SPLASH BLOCK

SCALE:NOT TO SCALE

STATEMENT OF USE
THIS DOCUMENT AND ANY ILLUSTRATIONS HEREON ARE PROVIDED AS STANDARD CONSTRUCTION DETAILS WITHIN **SYRACUSE CITY**. DEVIATION FROM THIS DOCUMENT REQUIRES APPROVAL OF SYRACUSE CITY. SYRACUSE CITY CORPORATION CAN NOT BE HELD LIABLE FOR MISUSE OR CHANGES REGARDING THIS DOCUMENT.

NO.	REVISION DESCRIPTION	BY	APR.	DATE
1	CHANGED STANDARD AIR VALVE MODEL	BB	RCW	2/11/14

CAD FILE: SYRACUSE CITY STANDARDS
DRAWN BY: BB
DESIGN BY: BB
CHECKED BY: RCW
LAST UPDATED: 2/11/2014
DATE ADOPTED: 2/11/2014

SYRACUSE CITY EST. 1935

DEVELOPMENT STANDARDS
SYRACUSE CITY CORPORATION

CULINARY DETAILS

SHEET 18

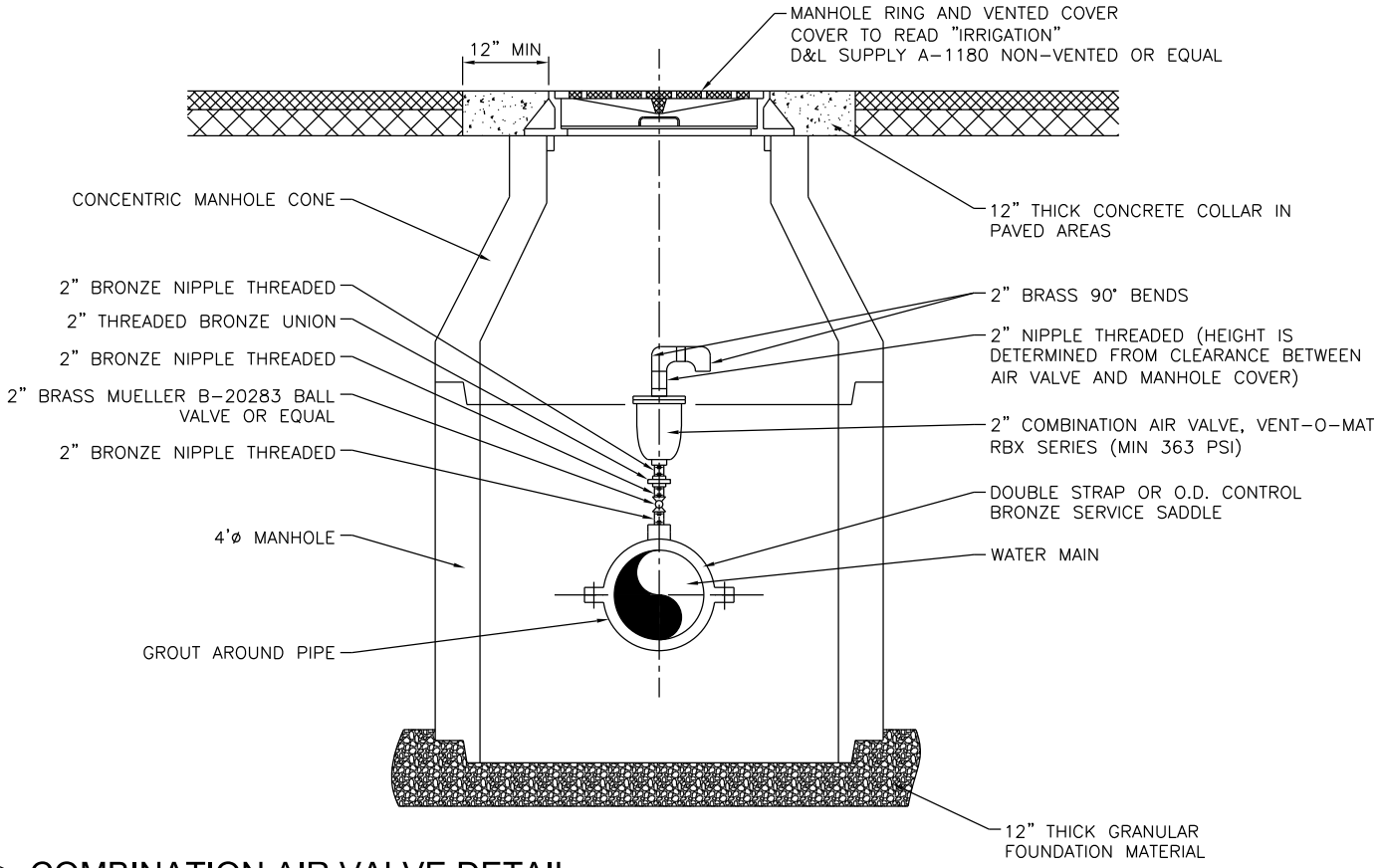

2 COMBINATION AIR VALVE DETAIL

SCALE:NOT TO SCALE

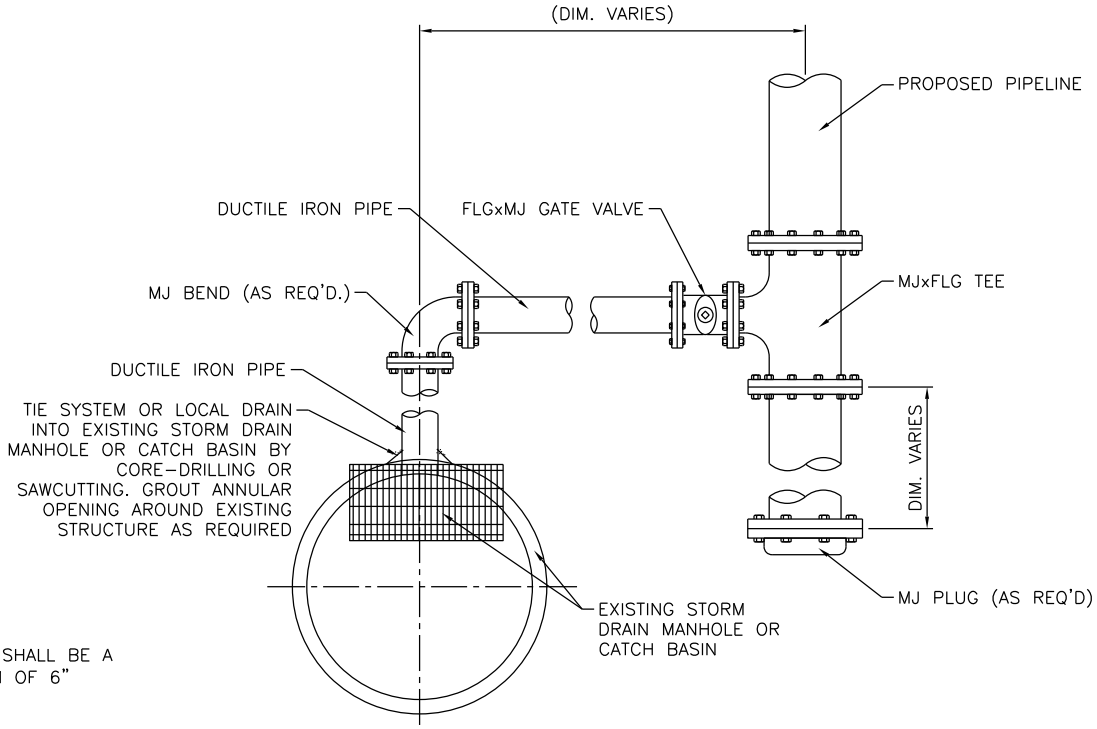

NOTE:
DRAINS SHALL BE A MINIMUM OF 6"

1 LOCAL / SYSTEM DRAIN VALVE DETAIL

SCALE:NOT TO SCALE

STATEMENT OF USE
THIS DOCUMENT AND ANY ILLUSTRATIONS HEREON ARE PROVIDED AS STANDARD CONSTRUCTION DETAILS WITHIN **SYRACUSE CITY**. DEVIATION FROM THIS DOCUMENT REQUIRES APPROVAL OF SYRACUSE CITY. SYRACUSE CITY CORPORATION CAN NOT BE HELD LIABLE FOR MISUSE OR CHANGES REGARDING THIS DOCUMENT.

NO.	REVISION DESCRIPTION	BY	APR.	DATE
1	CHANGED STANDARD AIR VALVE MODEL	BB	RCW	2/11/14

CAD FILE: SYRACUSE CITY STANDARDS
DRAWN BY: BB
DESIGN BY: BB
CHECKED BY: RCW
LAST UPDATED: 2/11/2014
DATE ADOPTED: 2/11/2014

SYRACUSE CITY EST. 1935

DEVELOPMENT STANDARDS
SYRACUSE CITY CORPORATION

COMBINATION AIR VALVE DETAIL
(SECONDARY WATER ONLY)

SHEET
19

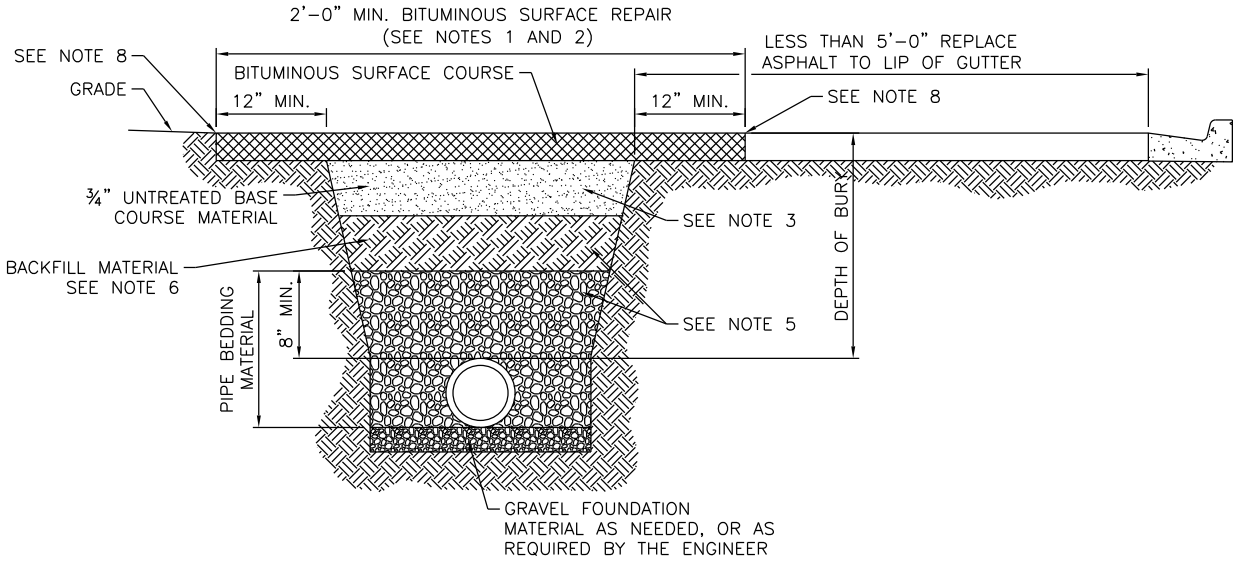

BITUMINOUS SURFACE REPAIR/TRENCH SECTION

NOTES:

1. SAW CUT BITUMINOUS ASPHALT SURFACE 24" WIDER THAN TRENCH ON EACH SIDE FOR FINAL TRENCH REPAIR WHERE BITUMINOUS SURFACE EXISTS.
2. BITUMINOUS SURFACE IS TO BE 4" MIN. OR TO MATCH EXISTING THICKNESS, WHICHEVER IS GREATER, AND 6" FOR STATE ROADS, OR MATCH EXISTING THICKNESS, WHICHEVER IS GREATER.
3. FOR TRENCH REPAIR, ¾" UNTREATED BASE COURSE MATERIAL IS TO BE 12" OR TO MATCH EXISTING THICKNESS, WHICHEVER IS GREATER, FOR NEW ROAD CONSTRUCTION, ¾" UNTREATED BASE COURSE MATERIAL IS TO BE 10" MIN. OR AS DIRECTED BY THE ENGINEER. BASE COURSE TO BE COMPACTED TO 96% ASTM D-1557.
4. SLOPE TRENCH SIDES TO MEET OSHA SAFETY REGULATIONS (LATEST REVISION).
5. BACKFILL AND BEDDING TO BE COMPACTED TO 96% ASTM D-1557 IN ROADWAYS AND 90% IN LANDSCAPED AREAS.
6. GRANULAR SUB-BASE 12" THICK BETWEEN BASE COURSE AND BACKFILL LAYERS AS DIRECTED BY ENGINEER. COMPACT TO 96% ASTM D-1557.
7. LOCATOR TAPE SHALL BE PLACED 12" ABOVE CENTERLINE OF PIPE FOR PRESSURIZED PIPELINES.
8. INITIAL PAVEMENT CUT SHALL BE AT EDGE OF OPEN TRENCH. A SECOND PAVEMENT CUT TO WIDEN BITUMINOUS SURFACE REPAIR AREA ONCE TRENCH IS BACKFILLED AND COMPACTED. MINIMUM WIDENED DISTANCE TO SECOND CUT IS SHOWN IN THE TABLE BELOW.

MAX EXCAVATION DEPTH	30"	48"	>48"
TRENCH EDGE TO 2ND CUT	12"	24"	36"

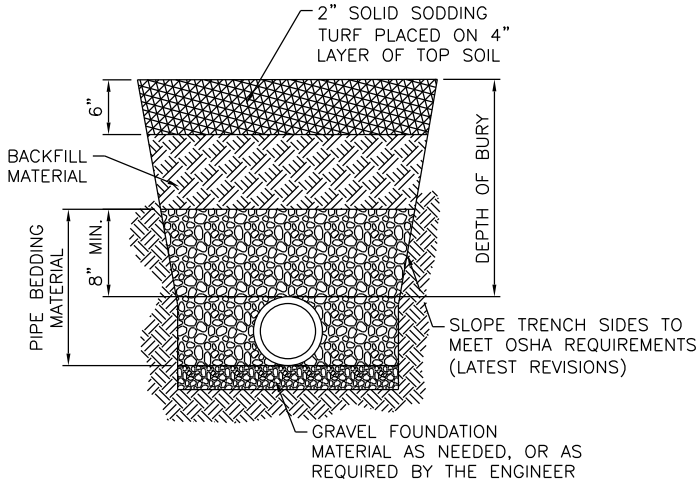

TURF SURFACE TRENCH SECTION

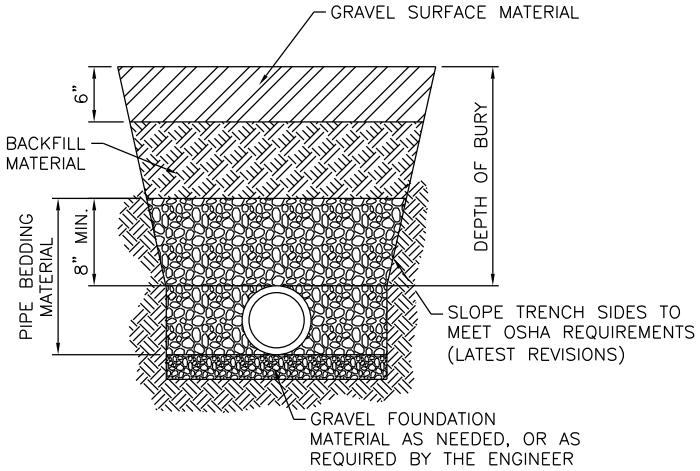

GRAVEL SURFACE TRENCH SECTION

1 TYPICAL TRENCH SECTIONS

SCALE: NOT TO SCALE

STATEMENT OF USE
THIS DOCUMENT AND ANY ILLUSTRATIONS HEREON ARE PROVIDED AS STANDARD CONSTRUCTION DETAILS WITHIN **SYRACUSE CITY.** DEVIATION FROM THIS DOCUMENT REQUIRES APPROVAL OF SYRACUSE CITY. SYRACUSE CITY CORPORATION CAN NOT BE HELD LIABLE FOR MISUSE OR CHANGES REGARDING THIS DOCUMENT.

NO.	REVISION DESCRIPTION	BY	APR.	DATE

CAD FILE: SYRACUSE CITY STANDARDS
DRAWN BY: BB
DESIGN BY: BB
CHECKED BY: RCW
LAST UPDATED: 11/1/2011
DATE ADOPTED: 2/14/2012

SYRACUSE CITY EST. 1935

DEVELOPMENT STANDARDS
SYRACUSE CITY CORPORATION

BITUMINOUS SURFACE REPAIR AND TYPICAL TRENCH SECTIONS

SHEET 20

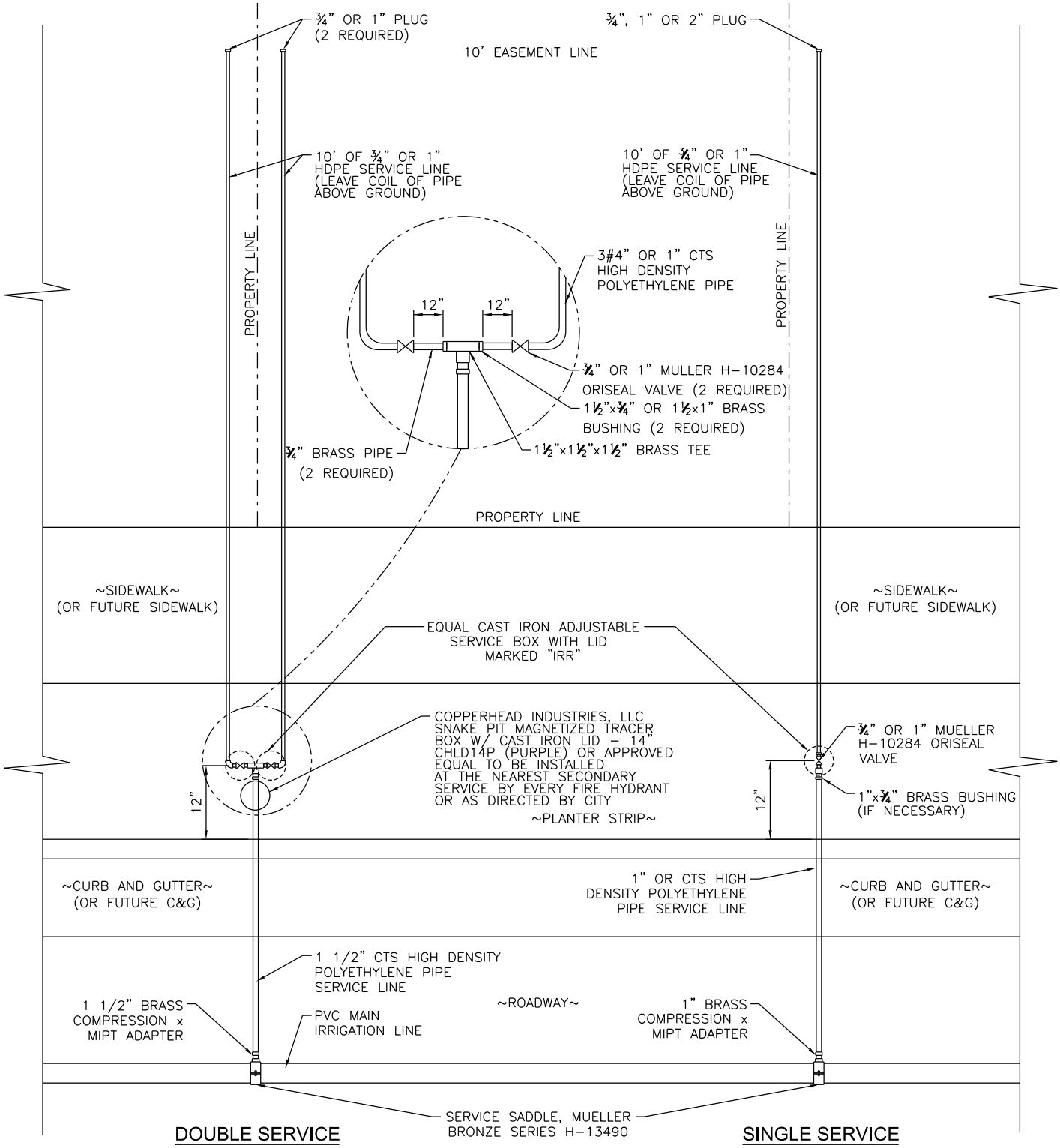

NOTE:
ALL NEW SECONDARY SERVICES SHALL BE SET UP FOR A ¾" SERVICE. IF THE HOMEOWNER OR DEVELOPER DESIRES, RESIDENTIAL SERVICES CAN BE UPGRADED TO A 1" SERVICE AT A HIGHER MONTHLY CHARGE. COMMERCIAL/INDUSTRIAL SERVICES SHALL BE SIZED TO ADEQUATELY SERVE THE DEVELOPMENT.

1 PRESSURE IRRIGATION SERVICE CONNECTIONS DETAIL

SCALE: NOT TO SCALE

STATEMENT OF USE
THIS DOCUMENT AND ANY ILLUSTRATIONS HEREON ARE PROVIDED AS STANDARD CONSTRUCTION DETAILS WITHIN **SYRACUSE CITY.** DEVIATION FROM THIS DOCUMENT REQUIRES APPROVAL OF SYRACUSE CITY. SYRACUSE CITY CORPORATION CAN NOT BE HELD LIABLE FOR MISUSE OR CHANGES REGARDING THIS DOCUMENT.

NO.	REVISION DESCRIPTION	BY	APR.	DATE
1	UPDATED TYPICAL SERVICE	BB	RCW	2/11/14

CAD FILE: SYRACUSE CITY STANDARDS
DRAWN BY: BB
DESIGN BY: BB
CHECKED BY: RCW
LAST UPDATED: 2/11/2014
DATE ADOPTED: 2/11/2014

SYRACUSE CITY EST. 1935

DEVELOPMENT STANDARDS
SYRACUSE CITY CORPORATION

TYPICAL PRESSURE IRRIGATION SERVICE CONNECTIONS

SHEET 21

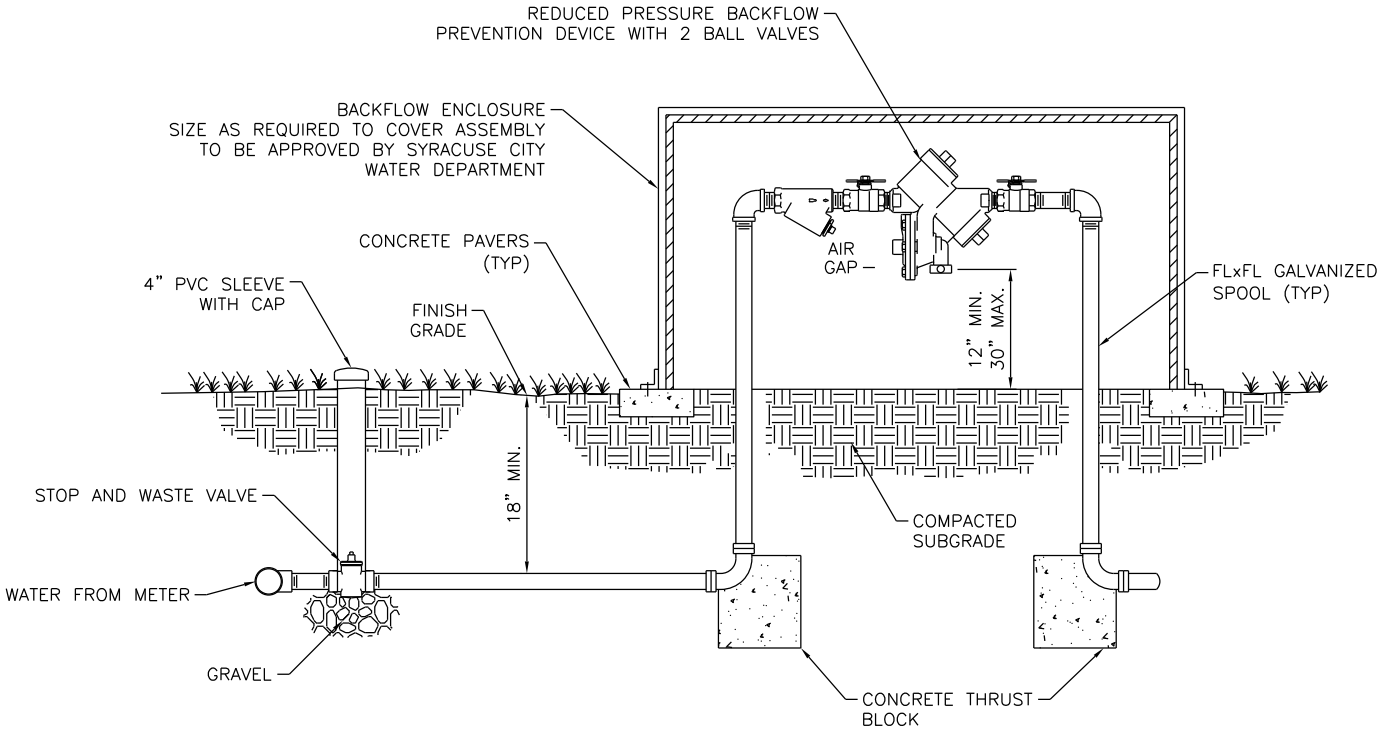

NOTES:
1. ALL WORK MUST BE INSPECTED BY SYRACUSE CITY WATER DEPARTMENT PRIOR TO BACKFILL.
2. INITIAL TESTING OF BACKFLOW ASSEMBLY TO BE DONE BY DEVELOPER AND REPORTED TO SYRACUSE CITY WATER DEPARTMENT.
3. ALL BURIED DUCTILE IRON PIPES ARE TO BE POLY-WRAPPED.
4. CONSULT WITH DEPARTMENT ENGINEER ON CONFIGURATION FOR 8" CONNECTION TO SERVICE MORE THAN 120 LOTS.

1 REDUCED PRESSURE BACKFLOW PREVENTION ASSEMBLY

SCALE: NOT TO SCALE

STATEMENT OF USE
THIS DOCUMENT AND ANY ILLUSTRATIONS HEREON ARE PROVIDED AS STANDARD CONSTRUCTION DETAILS WITHIN **SYRACUSE CITY.** DEVIATION FROM THIS DOCUMENT REQUIRES APPROVAL OF SYRACUSE CITY. SYRACUSE CITY CORPORATION CAN NOT BE HELD LIABLE FOR MISUSE OR CHANGES REGARDING THIS DOCUMENT.

NO.	REVISION DESCRIPTION	BY	APR.	DATE

CAD FILE: SYRACUSE CITY STANDARDS
DRAWN BY: BB
DESIGN BY: BB
CHECKED BY: RCW
LAST UPDATED: 11/1/2011
DATE ADOPTED: 2/14/2012

SYRACUSE CITY EST. 1935

DEVELOPMENT STANDARDS
SYRACUSE CITY CORPORATION

REDUCED PRESSURE BACKFLOW PREVENTION ASSEMBLY

SHEET 22

STREET CLASSIFICATION	BULB WATTAGE
ARTERIAL/MINOR ARTERIAL	200
COLLECTOR	100
LOCAL/LOW VOLUME LOCAL	40–60

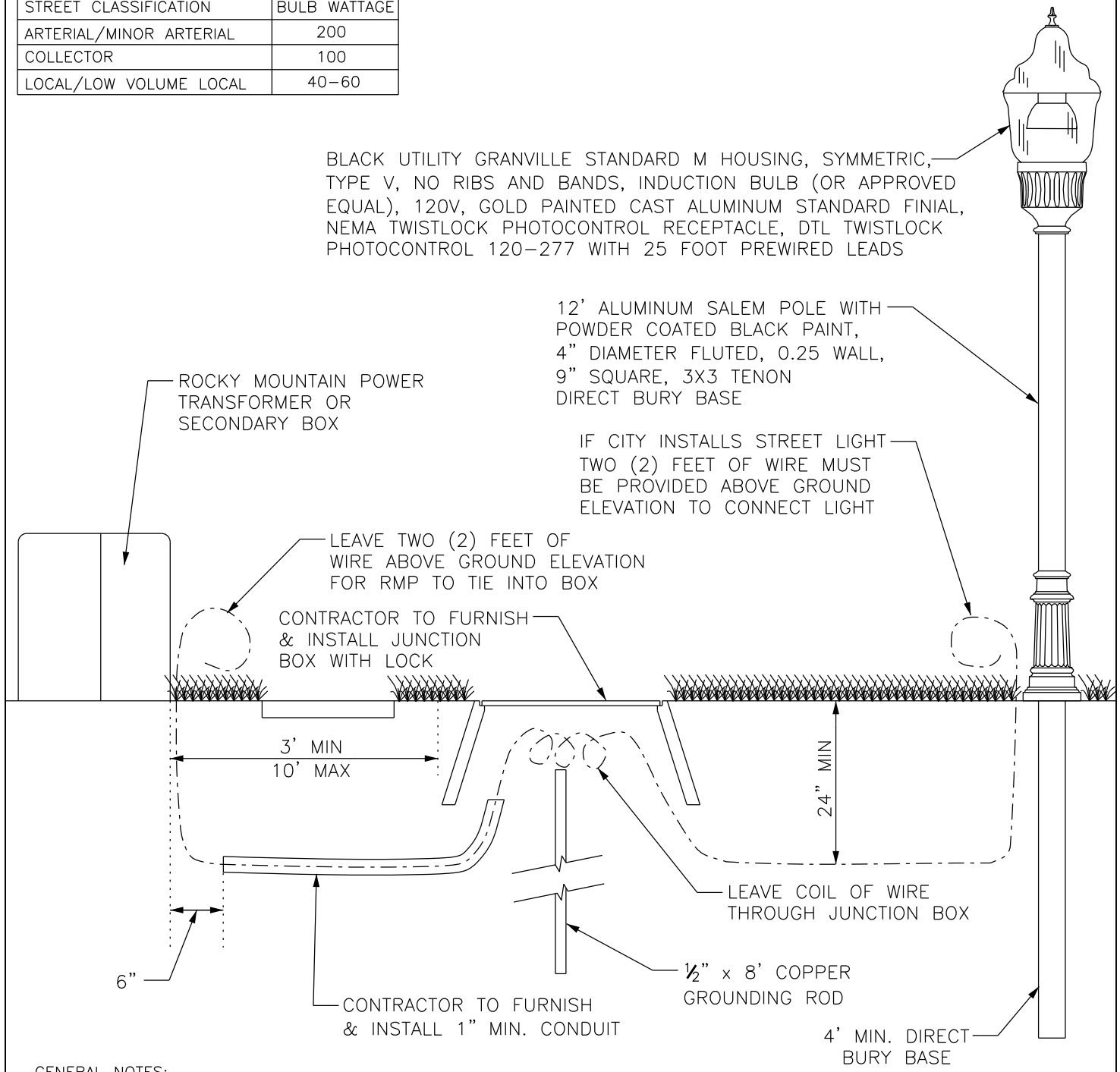

GENERAL NOTES:

- °COORDINATE WITH CITY FOR EXACT STREET LIGHT LOCATION
- °ALL WIRE SHALL BE #8 GAUGE RHW OR EQUAL WITH THREE SINGLE STRAND COPPER WIRES COLORED AS FOLLOWED:
  - BLACK–POWER
  - WHITE–NEUTRAL
  - GREEN–GROUND
- °JUNCTION BOX LID MUST SAY ELECTRICAL, POWER OR STREETLIGHT
- °CONDUIT SHALL BE INSTALLED FROM TRANSFORMER TO JUNCTION BOX & UNDER ANY EXISTING OR FUTURE CONCRETE AREAS
- °BASE OF LIGHT MUST BE FLUSH WITH TOP BACK OF CURB AND SIDEWALK
- °CONTRACTOR INSTALLED STREETLIGHT MUST HAVE PHOTOCELL COVER FACING NORTH
- °ALL STREET LIGHTS SHALL HAVE A MINIMUM CLEARANCE OF 10 FEET FROM ANY OVERHEAD POWER
- °AFTER INSTALLATION IS COMPLETE, THE CONTRACTOR SHALL CONTACT THE CITY FOR INSPECTION SYRACUSE CITY PUBLIC WORKS~801–825–7235

1 TYPICAL STREET LIGHT INSTALLATION

SCALE:NOT TO SCALE

STATEMENT OF USE
THIS DOCUMENT AND ANY ILLUSTRATIONS HEREON ARE PROVIDED AS STANDARD CONSTRUCTION DETAILS WITHIN **SYRACUSE CITY.** DEVIATION FROM THIS DOCUMENT REQUIRES APPROVAL OF SYRACUSE CITY. SYRACUSE CITY CORPORATION CAN NOT BE HELD LIABLE FOR MISUSE OR CHANGES REGARDING THIS DOCUMENT.

NO.	REVISION DESCRIPTION	BY	APR.	DATE

CAD FILE: SYRACUSE CITY STANDARDS
DRAWN BY: BB
DESIGN BY: BB
CHECKED BY: RCW
LAST UPDATED: 2/11/2014
DATE ADOPTED: 2/11/2014

SYRACUSE CITY EST. 1935

DEVELOPMENT STANDARDS
SYRACUSE CITY CORPORATION

STREET LIGHT INSTALLATION DETAIL

SHEET 23

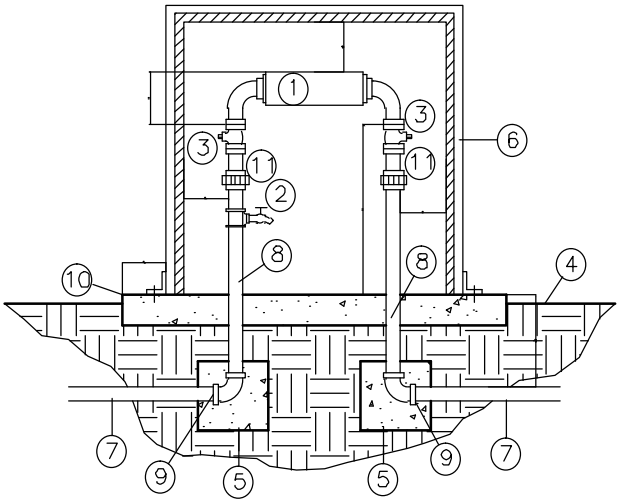

1. INLINE FILTER – SEE IRRIGATION EQUIPMENT SCHEDULE
2. ¾" BRASS HOSE BIB (W/ SADDLE OR TEE)
3. FL WAFER BUTTERFLY VALVE 4" AND LARGER FULL PORT APPOLO BALL VALVE 3" AND SMALLER
4. FINISH GRADE
5. CONCRETE THRUST BLOCKS (TYP). WRAP PIPES W/ 10 MIL TAPE. CAST AGAINST UNDISTURBED SOIL
6. FILTER ENCLOSURE – SEE IRRIGATION EQUIPMENT SCHEDULE (INSTALL PER MANUFACTURER'S SPECIFICATIONS)
7. MAIN LINE – SEE IRRIGATION SCHEDULE AND PLANS FOR SIZE AND MATERIAL
8. BRASS NIPPLE LENGTH AS REQUIRED (TYP 3" AND SMALLER)
9. ELBOW AND FLANGE ADAPTER AS NEEDED
10. 4" THICK CONCRETE PAD (SIZE AS REQUIRED)
11. ACTION UNION (ON NON FLANGED PIPE)

FILTER ASSEMBLY (3" AND SMALLER)

SCALE: NOT TO SCALE

STATEMENT OF USE

THIS DOCUMENT AND ANY ILLUSTRATIONS HEREON ARE PROVIDED AS STANDARD CONSTRUCTION DETAILS WITHIN SYRACUSE CITY. DEVIATION FROM THIS DOCUMENT REQUIRES APPROVAL OF SYRACUSE CITY. SYRACUSE CITY CORPORATION CAN NOT BE HELD LIABLE FOR MISUSE OR CHANGES REGARDING THIS DOCUMENT.

NO.	REVISION DESCRIPTION	BY	APR.	DATE

CAD FILE: SYRACUSE LANDSCAPE STDS
DRAWN BY: JDM/ELC
DESIGN BY: NQS
CHECKED BY: RCW
LAST UPDATED: 11/3/2011
DATE ADOPTED: XX/XX/XX

SYRACUSE EST. CITY 1935

DEVELOPMENT STANDARDS
SYRACUSE CITY CORPORATION

FILTER ASSEMBLY DETAIL - 3 INCHES AND SMALLER

SHEET L1

Plot Date: 11/3/2011 6:12 PM Plotted By: Kurt Fredericks
File Path: F:\STANDARDS\-JOB LANDSCAPE CITY STANDARDS SYRACUSE\SYRACUSE LANDSCAPE STD.DWG

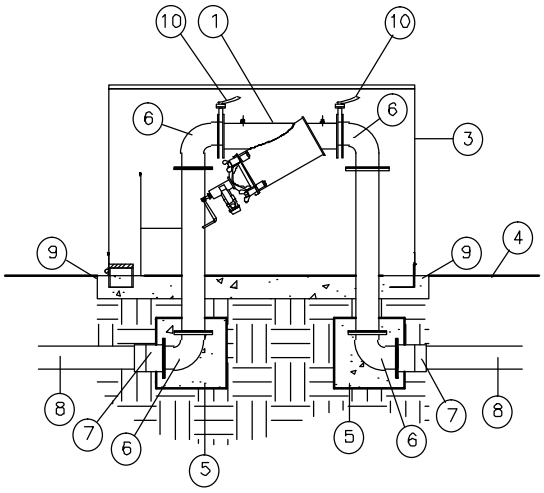

NOTE: INSTALL FILTER OFF OF CENTER TO ALLOW FOR COMPLETE ROTATION OF BRUSH AWAY HANDLE AND FOR REMOVAL OF FILTER SCREEN.

1. INLINE FILTER – SEE IRRIGATION EQUIPMENT SCHEDULE
2. FLxFL, DUCTILE IRON SPOOL (LENGTH AS REQUIRED)
3. FILTER ENCLOSURE – SEE IRRIGATION EQUIPMENT SCHEDULE
4. FINISH GRADE
5. CONCRETE THRUST BLOCKS (TYP). WRAP PIPES W/ 10 MIL TAPE. CAST AGAINST UNDISTURBED SOIL
6. FLANGE X FLANGE DUCTILE IRON 90
7. DUCTILE IRON FLANGE X BELL ADAPTER (SIZE AS REQURIED)
8. MAIN LINE – SEE IRRIGATION SCHEDULE FOR SIZE AND MATERIAL
9. 4" THICK CONCRETE PAD (SIZE AS REQUIRED)
10. STEEL BUTTERFLY VALVE

FILTER ASSEMBLY (4" AND LARGER)

SCALE: NOT TO SCALE

STATEMENT OF USE

THIS DOCUMENT AND ANY ILLUSTRATIONS HEREON ARE PROVIDED AS STANDARD CONSTRUCTION DETAILS WITHIN SYRACUSE CITY. DEVIATION FROM THIS DOCUMENT REQUIRES APPROVAL OF SYRACUSE CITY. SYRACUSE CITY CORPORATION CAN NOT BE HELD LIABLE FOR MISUSE OR CHANGES REGARDING THIS DOCUMENT.

NO.	REVISION DESCRIPTION	BY	APR.	DATE

CAD FILE: SYRACUSE LANDSCAPE STDS
DRAWN BY: JDM/ELC
DESIGN BY: NQS
CHECKED BY: RCW
LAST UPDATED: 11/3/2011
DATE ADOPTED: XX/XX/XX

SYRACUSE EST. CITY 1935

DEVELOPMENT STANDARDS
SYRACUSE CITY CORPORATION

FILTER ASSEMBLY DETAIL - 4 INCHES AND LARGER

SHEET L2

Plot Date: 1/5/2011 6:12 PM Plotted By: Kurt Fredericks
File Path: F:\STANDARDS\-JUB LANDSCAPE CITY STANDARDS SYRACUSE\SYRACUSE LANDSCAPE ST-2.DWG

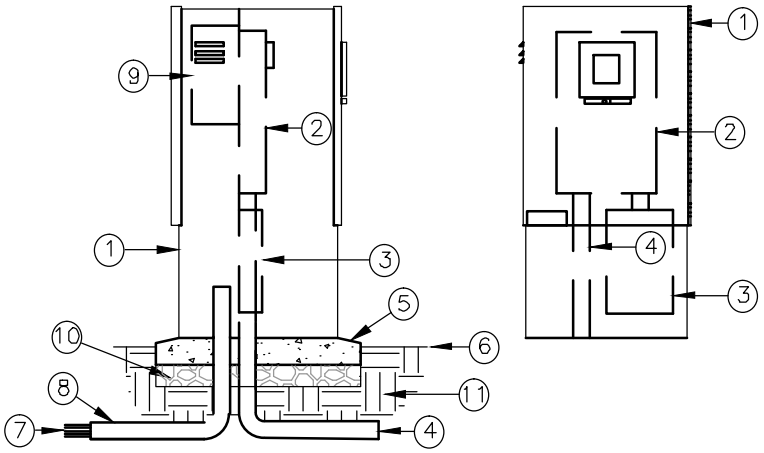

SIDE VIEW

FRONT VIEW

1. METERED CONTROLLER ENCLOSURE – SEE IRRIGATION EQUIPMENT SCHEDULE
2. METER SOCKET WITH TEST BLOCKS
3. LOAD CENTER
4. CONDUIT (NOT SUPPLIED) FOR LINE FEED INTO METER
5. POURED CONCRETE BASE, 4" MIN. THICKNESS, EXTEND 6" BEYOND OUTSIDE DIMENSIONS OF ENCLOSURE WITH 0.5% MIN. SLOPE FOR DRAINAGE

NOTE: SEE STANDARD GROUNDING ROD AND PLATE DETAIL.

6. FINISH GRADE
7. DIRECT BURIAL CONTROL WIRES TO CONTROL VALVES
8. PVC LONG SWEEP ELL – USE ONE SWEEP ELL PER CONTROLLER INSTALL ONE EXTRA ELL FOR FUTURE USE
9. AUTOMATIC CONTROLLER – REMOVE FRONT DOORS OF CONTROLLER IF MORE THEN ONE IS INSTALLED AND PLACE SIDE BY SIDE
10. 6" MIN. ROAD BASE
11. SUBGRADE COMPACTED TO 95% MDD

METERED CONTROLLER ENCLOSURE

SCALE: NOT TO SCALE

STATEMENT OF USE
THIS DOCUMENT AND ANY ILLUSTRATIONS HEREON ARE PROVIDED AS STANDARD CONSTRUCTION DETAILS WITHIN SYRACUSE CITY. DEVIATION FROM THIS DOCUMENT REQUIRES APPROVAL OF SYRACUSE CITY. SYRACUSE CITY CORPORATION CAN NOT BE HELD LIABLE FOR MISUSE OR CHANGES REGARDING THIS DOCUMENT.

NO.	REVISION DESCRIPTION	BY	APR.	DATE

CAD FILE: SYRACUSE LANDSCAPE STDS
DRAWN BY: JDM/ELC
DESIGN BY: NQS
CHECKED BY: RCW
LAST UPDATED: 11/3/2011
DATE ADOPTED: XX/XX/XX

SYRACUSE EST. CITY 1935

DEVELOPMENT STANDARDS
SYRACUSE CITY CORPORATION

METERED CONTROLLER ENCLOSURE DETAIL

SHEET L3

Plot Date 11/3/11 6:12 PM Plotted By: Kurt Fredericks
File Path: C:\STANDARDS\-JOB LANDSCAPE CITY STANDARDS SYRACUSE\SYRACUSE LANDSCAPE STDS.DWG

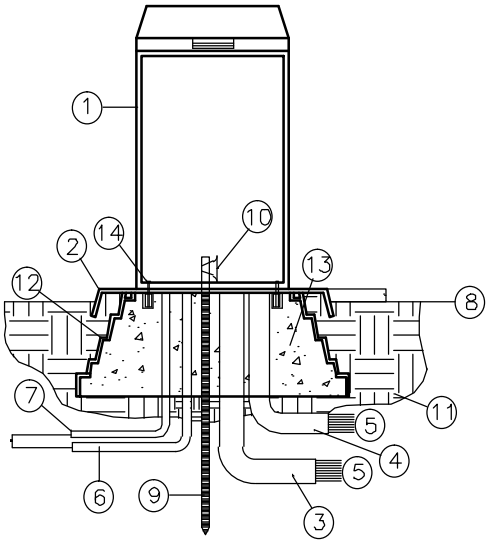

1. CONTROLLER AND CONTROLLER ENCLOSURE – SEE IRRIGATION EQUIPMENT SCHEDULE
2. QUICKPAD 3/16" MIN. THICKNESS ALUMINUM POWDER COATED PREFORMED PAD
3. PVC SWEEP ELL STATIONS 1–24
4. PVC SWEEP ELL STATIONS 25–48 (IF APPLICABLE)
5. DIRECT BURIAL CONTROL WIRES TO CONTROL VALVES
6. 110–VOLT SERVICE IN CONDUIT
7. EV–CAB–COM CABLE 1" CONDUIT (IF APPLICABLE)
8. FINISH GRADE
9. 5/8"x8' COPPER CLAD GROUND ROD
10. CADWELD CLAMP CONNECTED TO CONTROLLER GROUND WIRE
11. SUBGRADE COMPACTED TO 90%
12. PREFORMED PAD SUPPORT BASE
13. FILL INSIDE BASE WITH PEA GRAVEL
14. QUICKPAD FASTENING BRACKET (2)

PEDESTAL-MOUNT CONTROLLER

SCALE: NOT TO SCALE

STATEMENT OF USE

THIS DOCUMENT AND ANY ILLUSTRATIONS HEREON ARE PROVIDED AS STANDARD CONSTRUCTION DETAILS WITHIN SYRACUSE CITY. DEVIATION FROM THIS DOCUMENT REQUIRES APPROVAL OF SYRACUSE CITY. SYRACUSE CITY CORPORATION CAN NOT BE HELD LIABLE FOR MISUSE OR CHANGES REGARDING THIS DOCUMENT.

NO.	REVISION DESCRIPTION	BY	APR.	DATE

CAD FILE: SYRACUSE LANDSCAPE STDS
DRAWN BY: JDM/ELC
DESIGN BY: NQS
CHECKED BY: RCW
LAST UPDATED: 11/3/2011
DATE ADOPTED: XX/XX/XX

SYRACUSE EST. CITY 1935

DEVELOPMENT STANDARDS
SYRACUSE CITY CORPORATION

PEDESTAL-MOUNT CONTROLLER DETAIL

SHEET L4

Plot Date 11/3/11 10:45 AM Plotted By: Kurt Fredericks
File Path: C:\STANDARDS\-JUB LANDSCAPE CITY STANDARDS SYRACUSE\SYRACUSE LANDSCAPE STDS.DWG

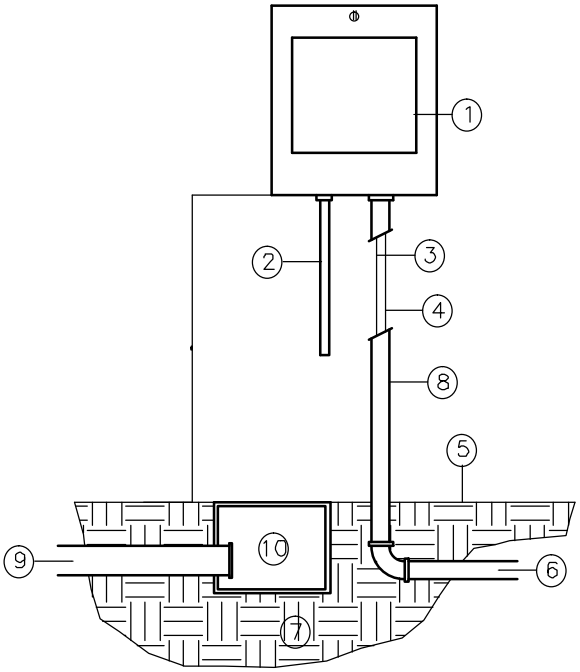

1. CONTROLLER ENCLOSURE WITH CONTROLLER – SEE IRRIGATION EQUIPMENT SCHEDULE
2. 120–VOLT WIRE IN RIGID CONDUIT
3. COMMON WIRE
4. CONTROL WIRES
5. FINISH GRADE
6. UF DIRECT–BURIAL WIRES TO REMOTE CONTROL VALVES
7. SUBGRADE COMPACTED TO 95% MIN.
8. CONDUIT TO MAINLINE
9. 3" CONDUIT FOR FUTURE EXPANSION
10. ELECTRICAL PULL BOX

WALL-MOUNT CONTROLLER

SCALE: NOT TO SCALE

STATEMENT OF USE
THIS DOCUMENT AND ANY ILLUSTRATIONS HEREON ARE PROVIDED AS STANDARD CONSTRUCTION DETAILS WITHIN SYRACUSE CITY. DEVIATION FROM THIS DOCUMENT REQUIRES APPROVAL OF SYRACUSE CITY. SYRACUSE CITY CORPORATION CAN NOT BE HELD LIABLE FOR MISUSE OR CHANGES REGARDING THIS DOCUMENT.

NO.	REVISION DESCRIPTION	BY	APR.	DATE

CAD FILE: SYRACUSE LANDSCAPE STDS
DRAWN BY: JDM/ELC
DESIGN BY: NQS
CHECKED BY: RCW
LAST UPDATED: 11/3/2011
DATE ADOPTED: XX/XX/XX

SYRACUSE EST. CITY 1935

DEVELOPMENT STANDARDS
SYRACUSE CITY CORPORATION

WALL-MOUNT CONTROLLER DETAIL

SHEET L5

Plot Date: 11/3/11 10:48 AM Plotted By: Kurt Fredericks
File Path: C:\STANDARDS\L-11-B LANDSCAPE CITY STANDARDS SYRACUSE\SYRACUSE LANDSCAPE STDS.DWG

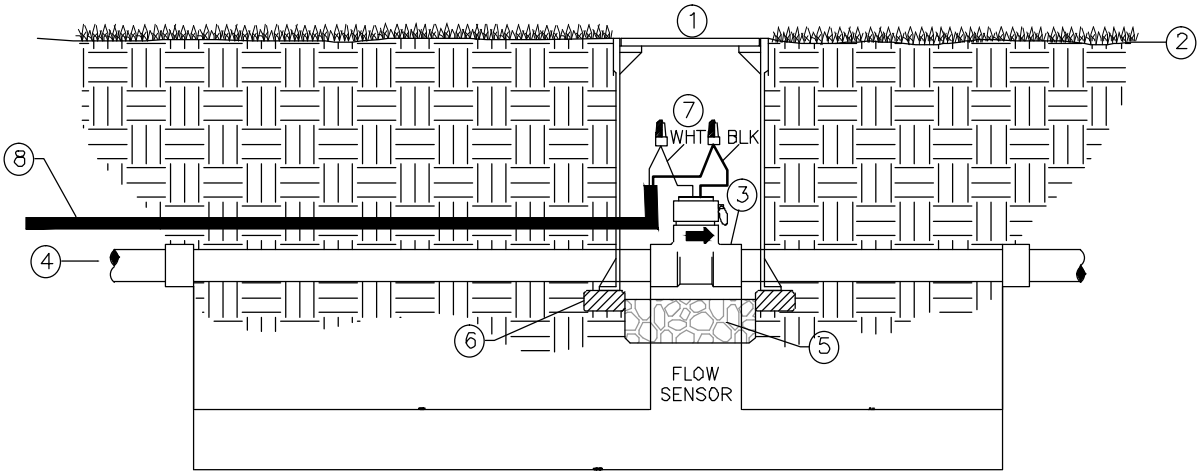

1. 10" ROUND GREEN PLASTIC VALVE BOX, W/ BOLT LOCK, CARSON OR EQUAL, MARKED "F.S." IN 2" WHITE LETTERS
2. FINISH GRADE
3. FLOW SENSOR
4. PVC MAINLINE
5. 5" MIN. DEPTH PEA GRAVEL
6. CONCRETE PAVERS ONLY
7. 3M DBR/Y WATER TIGHT WIRE CONNECTORS
8. SENSOR CABLE TO CONTROLLER

FLOW SENSOR INSTALLATION

SCALE: NOT TO SCALE

STATEMENT OF USE
THIS DOCUMENT AND ANY ILLUSTRATIONS HEREON ARE PROVIDED AS STANDARD CONSTRUCTION DETAILS WITHIN SYRACUSE CITY. DEVIATION FROM THIS DOCUMENT REQUIRES APPROVAL OF SYRACUSE CITY. SYRACUSE CITY CORPORATION CAN NOT BE HELD LIABLE FOR MISUSE OR CHANGES REGARDING THIS DOCUMENT.

NO.	REVISION DESCRIPTION	BY	APR.	DATE

CAD FILE: SYRACUSE LANDSCAPE STDS
DRAWN BY: JDM/ELC
DESIGN BY: NQS
CHECKED BY: RCW
LAST UPDATED: 11/3/2011
DATE ADOPTED: XX/XX/XX

SYRACUSE EST. CITY 1935

DEVELOPMENT STANDARDS
SYRACUSE CITY CORPORATION

FLOW SENSOR INSTALLATION DETAIL

SHEET
L6

Plot Date: 1/5/2011 10:43 PM Plotted By: Kurt Fredericks
File Path: C:\STANDARDS\-JOB LANDSCAPE CITY STANDARDS SYRACUSE\SYRACUSE LANDSCAPE STDS.DWG

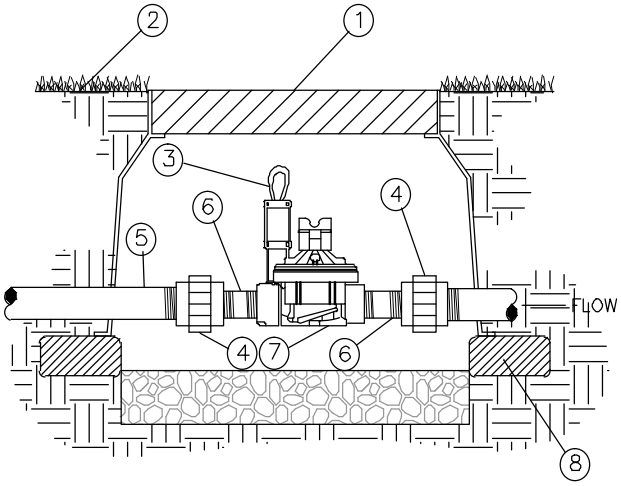

1. 18" GREEN JUMBO 1220 VALVE BOX W/ BOLT LOCK (CARSON OR APPROVED EQUAL). USE BOX EXTENSIONS AS NEEDED.
2. FINISH GRADE
3. WIRES TO SITE INTERFACE 18 GAUGE MIN. WIRE SIZE
4. ACTION UNION
5. PVC MAINLINE
6. SCH 80 NIPPLE (LENGTH AS REQUIRED)
7. MASTER VALVE – SEE IRRIGATION EQUIPMENT SCHEDULE
8. CONCRETE PAVERS ONLY

MASTER VALVE ASSEMBLY

SCALE: NOT TO SCALE

STATEMENT OF USE

THIS DOCUMENT AND ANY ILLUSTRATIONS HEREON ARE PROVIDED AS STANDARD CONSTRUCTION DETAILS WITHIN SYRACUSE CITY. DEVIATION FROM THIS DOCUMENT REQUIRES APPROVAL OF SYRACUSE CITY. SYRACUSE CITY CORPORATION CAN NOT BE HELD LIABLE FOR MISUSE OR CHANGES REGARDING THIS DOCUMENT.

NO.	REVISION DESCRIPTION	BY	APR.	DATE

CAD FILE: SYRACUSE LANDSCAPE STDS
DRAWN BY: JDM/ELC
DESIGN BY: NQS
CHECKED BY: RCW
LAST UPDATED: 11/3/2011
DATE ADOPTED: XX/XX/XX

SYRACUSE EST. CITY 1935

DEVELOPMENT STANDARDS
SYRACUSE CITY CORPORATION

MASTER VALVE ASSEMBLY DETAIL

SHEET L7

Plot Date 11/3/11 10:43 AM Plotted By: Kurt Fredericks
File Path: F:\STANDARDS\-JOB LANDSCAPE CITY STANDARDS SYRACUSE SYRACUSE LANDSCAPE STDS.DWG

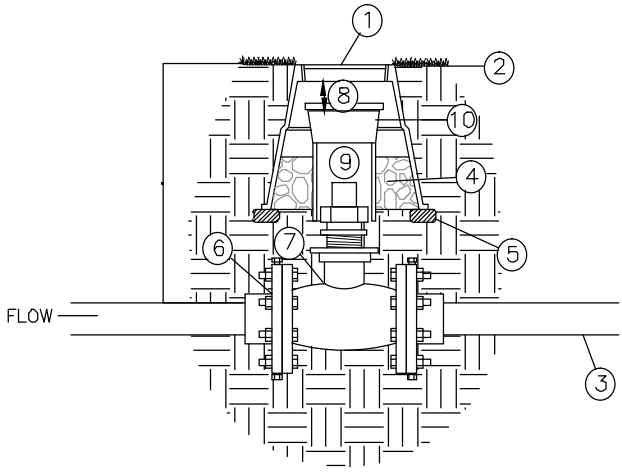

1. 10" ROUND PLASTIC VALVE BOX W/ BOLT LOCK (CARSON OR APPROVED EQUAL, MARKED "G.V." IN 2" WHITE LETTERS).
2. FINISH GRADE
3. PVC MAIN LINE
4. PEA GRAVEL
5. CONCRETE PAVERS ONLY
6. PVC FLANGE ADAPTER (TYP.)
7. FLANGED GATE VALVE – SEE IRRIGATION EQUIPMENT SCHEDULE
8. 3" MIN. CLEARANCE
9. 2" SQUARE OPERATING NUT
10. 4" PVC SCH. 40 PIPE SLEEVE (NOTCH TO FIT), CAPPED BY LOCKING VALVE CAP AND KEY.

ISOLATION GATE VALVE (FLANGED 3" AND LARGER)

SCALE: NOT TO SCALE

STATEMENT OF USE

THIS DOCUMENT AND ANY ILLUSTRATIONS HEREON ARE PROVIDED AS STANDARD CONSTRUCTION DETAILS WITHIN SYRACUSE CITY. DEVIATION FROM THIS DOCUMENT REQUIRES APPROVAL OF SYRACUSE CITY. SYRACUSE CITY CORPORATION CAN NOT BE HELD LIABLE FOR MISUSE OR CHANGES REGARDING THIS DOCUMENT.

NO.	REVISION DESCRIPTION	BY	APR.	DATE

CAD FILE: SYRACUSE LANDSCAPE STDS
DRAWN BY: JDM/ELC
DESIGN BY: NQS
CHECKED BY: RCW
LAST UPDATED: 11/3/2011
DATE ADOPTED: XX/XX/XX

SYRACUSE EST. CITY 1935

DEVELOPMENT STANDARDS
SYRACUSE CITY CORPORATION

ISOLATION GATE VALVE DETAIL - FLANGED 3 INCH AND LARGER

SHEET L8

Plot Date: 11/3/2011 9:02:28 PM Plotted By: Kurt S Fredericks
File Path: F:\STANDARDS\JOB LANDSCAPE CITY STANDARDS SYRACUSE\SYRACUSE LANDSCAPE ST3.DWG

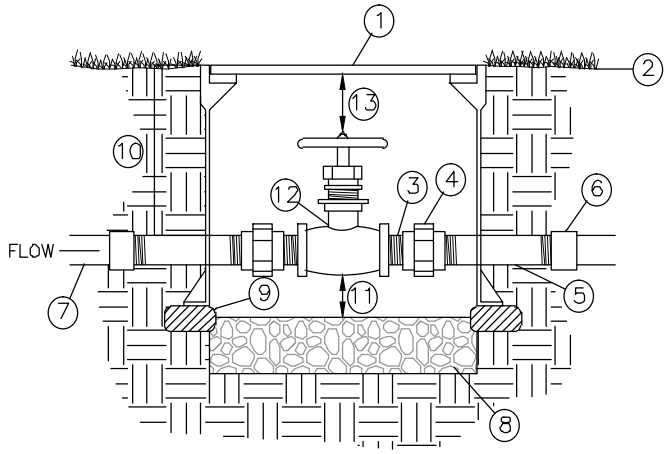

1. 18" GREEN JUMBO PLASTIC VALVE BOX W/ BOLT LOCK (CARSON OR APPROVED EQUAL, MARKED "G.V." IN 2" WHITE LETTERS). USE BOX EXTENSIONS AS NEEDED.
2. FINISH GRADE
3. CLOSE NIPPLE (TYP.)
4. ACTION UNIONS – SIZE AS REQUIRED
5. 12" MIN. GALVANIZED NIPPLE
6. PVC SCH. 80 FEMALE ADAPTER (TYP.)
7. PVC MAINLINE
8. 4" MIN. DEPTH PEA GRAVEL
9. CONCRETE PAVERS ONLY
10. DEPTH – SEE NOTES
11. 2" MIN. 5" MAX CLEARANCE
12. THREADED GATE VALVE WITH HANDWHEEL – SEE IRRIGATION EQUIPMENT SCHEDULE
13. 3" MIN. CLEARANCE

ISOLATION GATE VALVE (THREADED LESS THAN 3")

SCALE: NOT TO SCALE

STATEMENT OF USE
THIS DOCUMENT AND ANY ILLUSTRATIONS HEREON ARE PROVIDED AS STANDARD CONSTRUCTION DETAILS WITHIN SYRACUSE CITY. DEVIATION FROM THIS DOCUMENT REQUIRES APPROVAL OF SYRACUSE CITY. SYRACUSE CITY CORPORATION CAN NOT BE HELD LIABLE FOR MISUSE OR CHANGES REGARDING THIS DOCUMENT.

NO.	REVISION DESCRIPTION	BY	APR.	DATE

CAD FILE: SYRACUSE LANDSCAPE STDS
DRAWN BY: JDM/ELC
DESIGN BY: NQS
CHECKED BY: RCW
LAST UPDATED: 11/3/2011
DATE ADOPTED: XX/XX/XX

SYRACUSE EST. CITY 1935

DEVELOPMENT STANDARDS
SYRACUSE CITY CORPORATION

ISOLATION GATE VALVE DETAIL - THREADED LESS THAN 3 INCHES

SHEET L9

Plot Date 11/3/2011 10:02 PM Plotted By: Kurt S Fredericks
File Path: C:\STANDARDS\L-JUB LANDSCAPE CITY STANDARDS SYRACUSE\SYRACUSE LANDSCAPE STDS.DWG

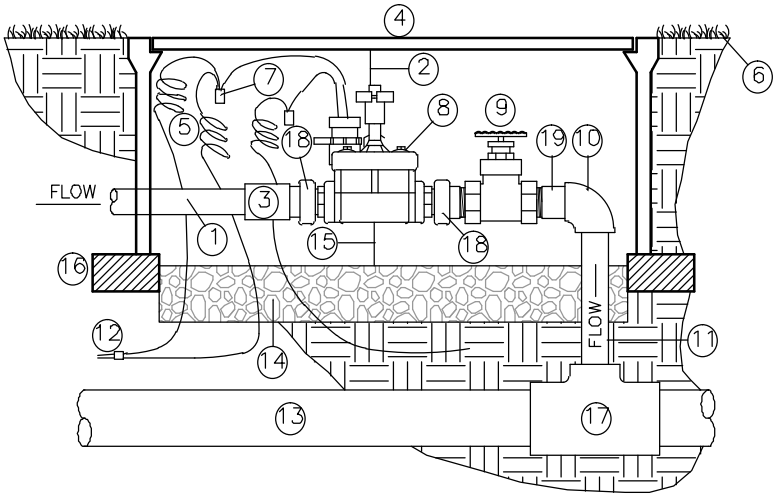

NOTES:
1. ONLY ONE VALVE PER BOX.
2. PLACE BOXES A MINIMUM OF 2' APART.
3. USE BOX EXTENSIONS AS REQUIRED.

1. PVC LATERAL LINE
2. 3" MIN. 6" MAX. CLEARANCE
3. COUPLER SCH. 80 SLIP TO SLIP
4. PLASTIC VALVE BOX W/ BOLT LOCK (CARSON OR APPROVED EQUAL) SIZE AS PER VALVE SIZE: 1" VALVE = 18" STANDARD 1419 BOX; 1½"–2" VALVE = 18" JUMBO 1220 BOX
5. PROVIDE 24" EXPANSION LOOP AT EACH WIRE CONNECTOR IN BOX
6. FINISH GRADE
7. WATER TIGHT WIRE CONNECTORS (TYP)
8. VALVE – RAIN BIRD PESB VALVE
9. BRASS GATE VALVE (MUELLER, MATCO, NIBCO) WITH NON–RISING STEM
10. PVC SCH. 80 ELL
11. PVC SCH. 80 PIPE, SOLVENT WELDED, LENGTH AS REQUIRED
12. WIRES TO CONTROLLER, TAPE AND BUNDLE EVERY 10' – SEE TRENCH DETAIL
13. MAIN LINE
14. 4" MIN. DEPTH ¾" WASHED GRAVEL
15. 4" MIN. CLEARANCE REQUIRED
16. CONCRETE PAVERS ONLY
17. PVC SCH. 80 TEE (OR ELL OR DUCTILE IRON SERVICE TEE)
18. ACTION UNION – PART 18010–XX
    PART 18011–XX
    PART 18012–XX
19. PVC TOE NIPPLE

CONTROL VALVE ASSEMBLY

SCALE: NOT TO SCALE

STATEMENT OF USE
THIS DOCUMENT AND ANY ILLUSTRATIONS HEREON ARE PROVIDED AS STANDARD CONSTRUCTION DETAILS WITHIN SYRACUSE CITY. DEVIATION FROM THIS DOCUMENT REQUIRES APPROVAL OF SYRACUSE CITY. SYRACUSE CITY CORPORATION CAN NOT BE HELD LIABLE FOR MISUSE OR CHANGES REGARDING THIS DOCUMENT.

NO.	REVISION DESCRIPTION	BY	APR.	DATE

CAD FILE: SYRACUSE LANDSCAPE STDS
DRAWN BY: JDM/ELC
DESIGN BY: NQS
CHECKED BY: RCW
LAST UPDATED: 11/3/2011
DATE ADOPTED: XX/XX/XX

SYRACUSE EST. CITY 1935

DEVELOPMENT STANDARDS
SYRACUSE CITY CORPORATION

CONTROL VALVE ASSEMBLY DETAIL

SHEET
L10

Plot Date: 11/3/2011 10:01 AM Plotted By: Kurt Fredericks
File Path: C:\STANDARDS\-JUB LANDSCAPE CITY STANDARDS SYRACUSE\SYRACUSE LANDSCAPE STDS.DWG

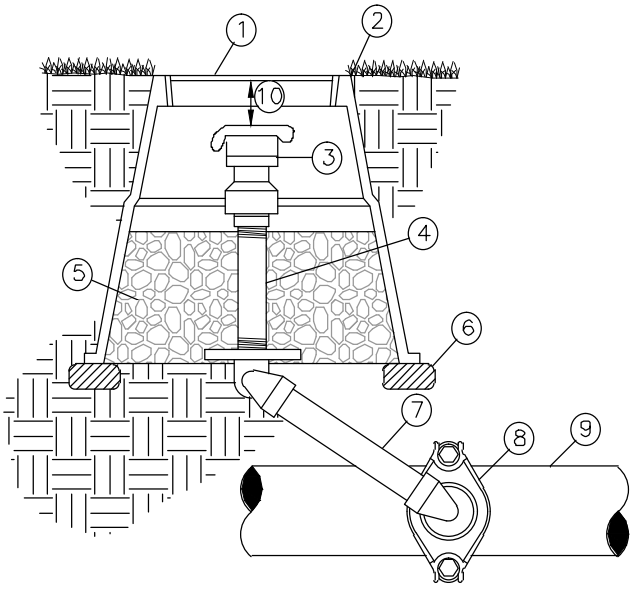

1. 10" ROUND GREEN PLASTIC VALVE BOX W/ BOLT LOCK, CARSON 910 OR EQUAL
2. FLUSH WITH GRADE
3. QUICK COUPLING VALVE – SEE EQUIPMENT SCHEDULE
4. BRASS NIPPLE, LENGTH AS REQUIRED
5. 6" MIN. DEPTH CLEAN PEA GRAVEL
6. CONCRETE PAVERS ONLY
7. 12" LASCO UNITIZED SWING JOINT W/ BRASS INSERT STABILIZER ELBOW, OR 12" SPEARS SWING JOINT RISER ASSEMBLY W/ BRASS FEMALE THREAD 90° ELL OUTLET
8. 3" AND LARGER, DUCTILE IRON SERVICE SADDLE W/ S.S. STRAP (SIDE MOUNTED, SIZE AS REQUIRED) 2 1/2" AND SMALLER, USE PVC SCH 80 TEE AND 90° (SIDE MOUNTED, SIZE AS REQUIRED)
9. PVC MAIN LINE
10. 3" MIN. 6" MAX. CLEARANCE

QUICK COUPLING VALVE ASSEMBLY (3" AND LARGER)

SCALE: NOT TO SCALE

STATEMENT OF USE

THIS DOCUMENT AND ANY ILLUSTRATIONS HEREON ARE PROVIDED AS STANDARD CONSTRUCTION DETAILS WITHIN SYRACUSE CITY. DEVIATION FROM THIS DOCUMENT REQUIRES APPROVAL OF SYRACUSE CITY. SYRACUSE CITY CORPORATION CAN NOT BE HELD LIABLE FOR MISUSE OR CHANGES REGARDING THIS DOCUMENT.

NO.	REVISION DESCRIPTION	BY	APR.	DATE

CAD FILE: SYRACUSE LANDSCAPE STDS
DRAWN BY: JDM/ELC
DESIGN BY: NQS
CHECKED BY: RCW
LAST UPDATED: 11/3/2011
DATE ADOPTED: XX/XX/XX

SYRACUSE EST. CITY 1935

DEVELOPMENT STANDARDS
SYRACUSE CITY CORPORATION

QUICK COUPLING VALVE ASSEMBLY DETAIL - 3 INCHES AND LARGER

SHEET L11

Plot Date 11/3/2011 10:01 PM Plotted By: Kurt S Fredericks
File Path: F:\STANDARDS\-JOB LANDSCAPE CITY STANDARDS SYRACUSE SYRACUSE LANDSCAPE STDS.DWG

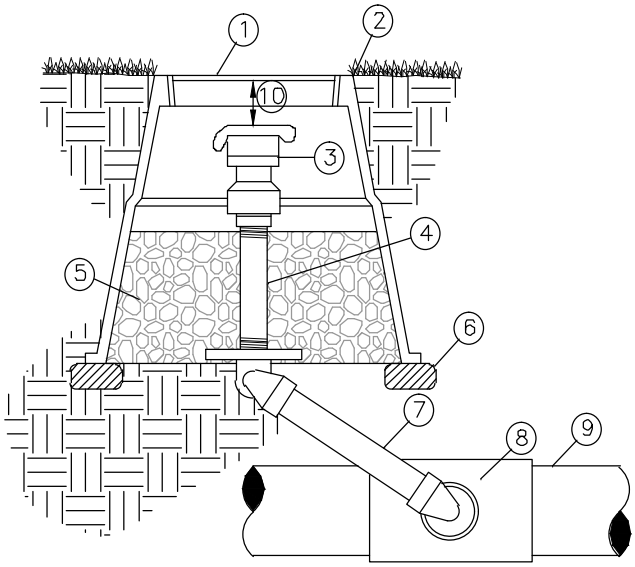

1. 10" ROUND GREEN PLASTIC VALVE BOX W/ BOLT LOCK, CARSON 910 OR EQUAL
2. FLUSH WITH GRADE
3. QUICK COUPLING VALVE – SEE EQUIPMENT SCHEDULE
4. BRASS NIPPLE, LENGTH AS REQUIRED
5. 6" MIN. DEPTH CLEAN PEA GRAVEL
6. CONCRETE PAVERS ONLY
7. 12" LASCO UNITIZED SWING JOINT W/ BRASS INSERT STABILIZER ELBOW, OR 12" SPEARS SWING JOINT RISER ASSEMBLY W/ BRASS FEMALE THREAD 90° ELL OUTLET
8. 2 1/2" AND SMALLER, USE PVC SCH 80 TEE AND 90° (SIDE MOUNTED, SIZE AS REQUIRED)
9. PVC MAIN LINE
10. 3" MIN. 6" MAX. CLEARANCE

QUICK COUPLING VALVE ASSEMBLY (2 1/2" AND SMALLER)

SCALE: NOT TO SCALE

STATEMENT OF USE

THIS DOCUMENT AND ANY ILLUSTRATIONS HEREON ARE PROVIDED AS STANDARD CONSTRUCTION DETAILS WITHIN SYRACUSE CITY. DEVIATION FROM THIS DOCUMENT REQUIRES APPROVAL OF SYRACUSE CITY. SYRACUSE CITY CORPORATION CAN NOT BE HELD LIABLE FOR MISUSE OR CHANGES REGARDING THIS DOCUMENT.

NO.	REVISION DESCRIPTION	BY	APR.	DATE

CAD FILE: SYRACUSE LANDSCAPE STDS
DRAWN BY: JDM/ELC
DESIGN BY: NQS
CHECKED BY: RCW
LAST UPDATED: 11/3/2011
DATE ADOPTED: XX/XX/XX

SYRACUSE EST. CITY 1935

DEVELOPMENT STANDARDS
SYRACUSE CITY CORPORATION

QUICK COUPLING VALVE ASSEMBLY DETAIL - 2.5 INCHES AND SMALLER

SHEET L12

Plot Date 11/3/2011 10:32 PM Plotted By: Kurt S Fredericks
File Path: F:\STANDARDS\L-12 LANDSCAPE CITY STANDARDS SYRACUSE\SYRACUSE LANDSCAPE STDS.DWG

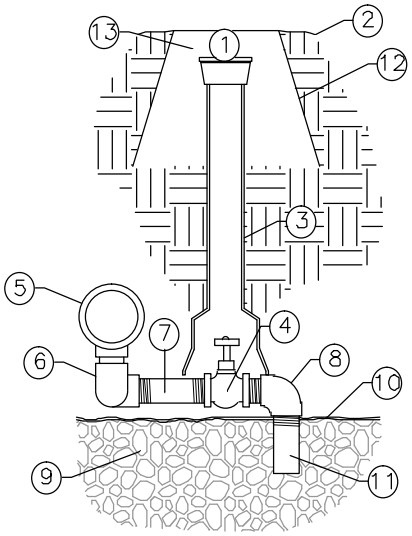

1. 2" PVC SCH. 40 PIPE SLEEVE (NOTCH TO FIT), CAPPED BY LOCKING VALVE CAP AND KEY.
2. FINISH GRADE
3. ADJUST HEIGHT AS REQUIRED
4. 3/4" VALVE (SEE IRRIGATION EQUIP. SHC.)
5. PVC MAINLINE & SERVICE TEE
6. (2)–FIPTxFIPT 90° ELL
   (2)–3/4" x CLOSE PVC NIPPLE
7. 3/4"x12" PVC SCH 80 NIPPLE
8. 3/4" 90° STREET ELL
9. 3/4" ROCK SUMP – 6 C.F. MIN. SIZE
10. FILTER FABRIC COVERING SUMP
11. 3/4" x 6" PVC SCH 80 TOE NIPPLE
12. 10" ROUND GREEN PLASTIC VALVE BOX, CARSON 910 OR EQUAL AT TOP OF GRADE
13. 3" TO 6" CLEAR SPACE

MANUAL DRAIN VALVE ASSEMBLY

SCALE: NOT TO SCALE

STATEMENT OF USE
THIS DOCUMENT AND ANY ILLUSTRATIONS HEREON ARE PROVIDED AS STANDARD CONSTRUCTION DETAILS WITHIN SYRACUSE CITY. DEVIATION FROM THIS DOCUMENT REQUIRES APPROVAL OF SYRACUSE CITY. SYRACUSE CITY CORPORATION CAN NOT BE HELD LIABLE FOR MISUSE OR CHANGES REGARDING THIS DOCUMENT.

NO.	REVISION DESCRIPTION	BY	APR.	DATE

CAD FILE: SYRACUSE LANDSCAPE STDS
DRAWN BY: JDM/ELC
DESIGN BY: NQS
CHECKED BY: RCW
LAST UPDATED: 11/3/2011
DATE ADOPTED: XX/XX/XX

SYRACUSE EST. CITY 1935

DEVELOPMENT STANDARDS
SYRACUSE CITY CORPORATION

MANUAL DRAIN VALVE ASSEMBLY DETAIL

SHEET
L13

Plot Date: 11/3/2011 10:02 PM Plotted By: Kurt S Fredericks
File Path: C:\STANDARDS\L-11-B LANDSCAPE CITY STANDARDS SYRACUSE\SYRACUSE LANDSCAPE STDS.DWG

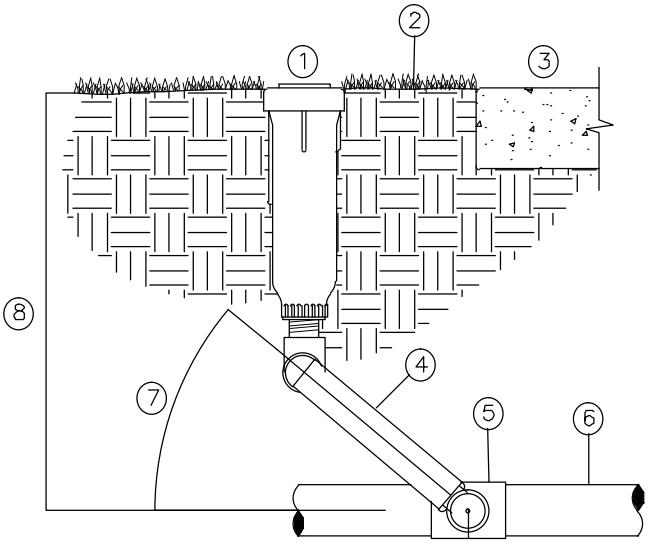

1. POP-UP ROTOR SPRINKLER – SEE LEGEND
2. TOP OF SPRINKLER WILL BE FLUSH WITH GRADE
3. NOTE: ALL SPRAY HEADS TO BE PLACED 2" CLEAR OF ALL HARDSCAPE SURFACES
4. LASCO UNITIZED SWING JOINT OR SPEARS SWING JOINT RISER ASSEMBLY; 12" MIN. LENGTH; SIZE AS REQUIRED
5. PVC SCH 40 SxSxT TEE OR (ELL)
6. PVC LATERAL LINE, SIZE AS NOTED ON PLAN
7. SWING JOINT ARM INSTALLED AT ANGLE BETWEEN 30 AND 45 DEG. OF LATERAL PIPE
8. DEPTH – SEE NOTES & TRENCH DETAIL

POP-UP GEAR DRIVE ROTOR SPRINKLER

SCALE: NOT TO SCALE

STATEMENT OF USE

THIS DOCUMENT AND ANY ILLUSTRATIONS HEREON ARE PROVIDED AS STANDARD CONSTRUCTION DETAILS WITHIN SYRACUSE CITY. DEVIATION FROM THIS DOCUMENT REQUIRES APPROVAL OF SYRACUSE CITY. SYRACUSE CITY CORPORATION CAN NOT BE HELD LIABLE FOR MISUSE OR CHANGES REGARDING THIS DOCUMENT.

NO.	REVISION DESCRIPTION	BY	APR.	DATE

CAD FILE: SYRACUSE LANDSCAPE STDS
DRAWN BY: JDM/ELC
DESIGN BY: NQS
CHECKED BY: RCW
LAST UPDATED: 11/3/2011
DATE ADOPTED: XX/XX/XX

SYRACUSE EST. CITY 1935

DEVELOPMENT STANDARDS
SYRACUSE CITY CORPORATION

POP-UP GEAR DRIVE ROTOR SPRINKLER DETAIL

SHEET L14

Plot Date: 11/3/2011 10:32 AM Plotted By: Kurt S Fredericks
File Path: F:\STANDARDS\L-U-B LANDSCAPE CITY STANDARDS SYRACUSE\SYRACUSE LANDSCAPE ST-S.DWG

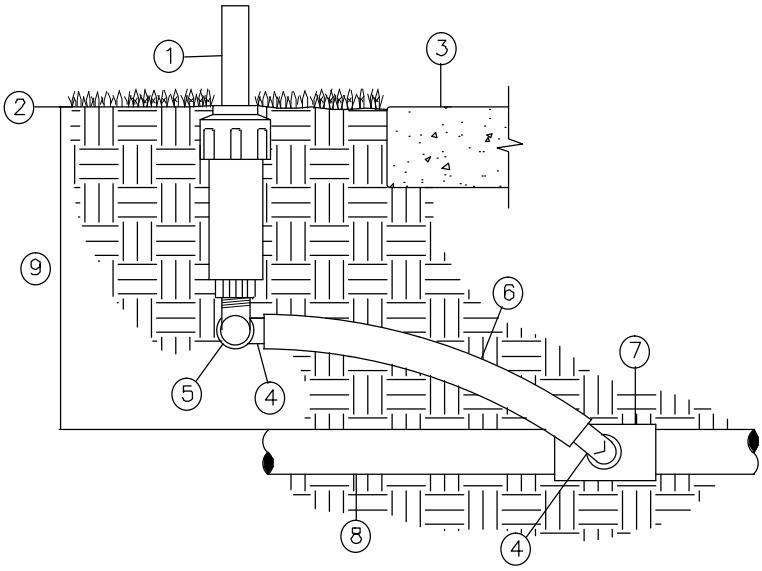

1. POP–UP SPRAY HEAD – SEE IRRIGATION EQUIPMENT SCHEDULE
2. TOP OF SPRINKLER WILL BE FLUSH WITH GRADE
3. NOTE: ALL SPRAY HEADS TO BE PLACED 2" CLEAR OF ALL HARDSCAPE SURFACES
4. SWING PIPE ELL WITH SPIRAL BARB FITTING (TYP.)
5. MARLEX STREET ELL
6. FLEXIBLE SWING PIPE, 12" MIN., 36" MAX. LENGTH
7. PVC SCH 40 SxSxT TEE (OR ELL)
8. PVC LATERAL LINE, SIZE AS NOTED ON PLAN
9. DEPTH – SEE TRENCH DETAIL & SPECIFICATIONS

POP-UP SPRAY / ROTARY SPRINKLER

SCALE: NOT TO SCALE

STATEMENT OF USE
THIS DOCUMENT AND ANY ILLUSTRATIONS HEREON ARE PROVIDED AS STANDARD CONSTRUCTION DETAILS WITHIN SYRACUSE CITY. DEVIATION FROM THIS DOCUMENT REQUIRES APPROVAL OF SYRACUSE CITY. SYRACUSE CITY CORPORATION CAN NOT BE HELD LIABLE FOR MISUSE OR CHANGES REGARDING THIS DOCUMENT.

NO.	REVISION DESCRIPTION	BY	APR.	DATE

CAD FILE: SYRACUSE LANDSCAPE STDS
DRAWN BY: JDM/ELC
DESIGN BY: NQS
CHECKED BY: RCW
LAST UPDATED: 11/3/2011
DATE ADOPTED: XX/XX/XX

SYRACUSE EST. CITY 1935

DEVELOPMENT STANDARDS
SYRACUSE CITY CORPORATION

POP-UP SPRAY OR ROTARY SPRINKLER DETAIL

SHEET L15

Plot Date: 11/3/2011 10:32 AM Plotted By: Kurt S Fredericks
File Path: F:\STANDARDS\L-U-B LANDSCAPE CITY STANDARDS SYRACUSE\SYRACUSE LANDSCAPE STDS.DWG

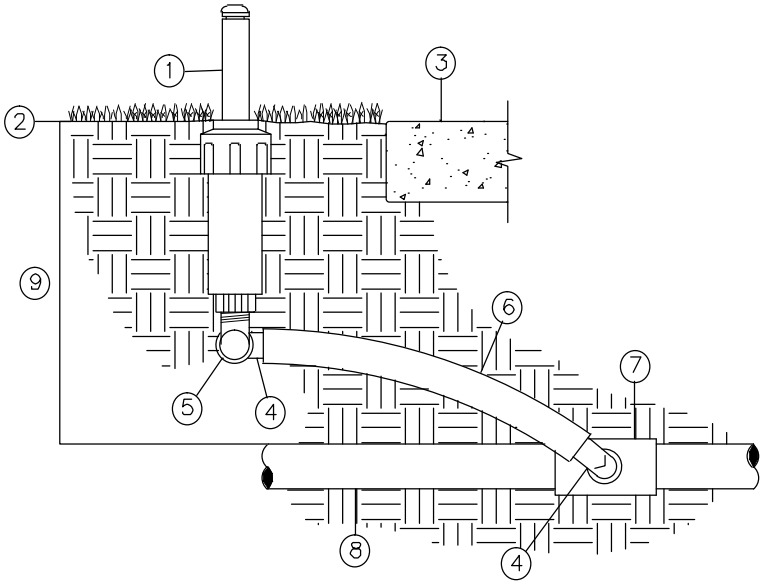

1. POP-UP BUBBLER HEAD – SEE IRRIGATION EQUIPMENT SCHEDULE
2. TOP OF SPRINKLER WILL BE FLUSH WITH GRADE
3. NOTE: ALL BUBBLER HEADS TO BE PLACED 2" CLEAR OF ALL HARDSCAPE SURFACES
4. SWING PIPE ELL WITH SPIRAL BARB FITTING (TYP.)
5. MARLEX STREET ELL
6. FLEXIBLE SWING PIPE, 12" MIN. LENGTH
7. PVC SCH 40 SxSxT TEE (OR ELL)
8. PVC LATERAL LINE, SIZE AS NOTED ON PLAN
9. DEPTH – SEE TRENCH DETAIL & SPECIFICATIONS

POP-UP MULTI-STREAM BUBBLER SPRINKLER

SCALE: NOT TO SCALE

STATEMENT OF USE

THIS DOCUMENT AND ANY ILLUSTRATIONS HEREON ARE PROVIDED AS STANDARD CONSTRUCTION DETAILS WITHIN SYRACUSE CITY. DEVIATION FROM THIS DOCUMENT REQUIRES APPROVAL OF SYRACUSE CITY. SYRACUSE CITY CORPORATION CAN NOT BE HELD LIABLE FOR MISUSE OR CHANGES REGARDING THIS DOCUMENT.

NO.	REVISION DESCRIPTION	BY	APR.	DATE

CAD FILE: SYRACUSE LANDSCAPE STDS
DRAWN BY: JDM/ELC
DESIGN BY: NQS
CHECKED BY: RCW
LAST UPDATED: 11/3/2011
DATE ADOPTED: XX/XX/XX

SYRACUSE EST. CITY 1935

DEVELOPMENT STANDARDS
SYRACUSE CITY CORPORATION

POP-UP MULTI-STREAM BUBBLER SPRINKLER DETAIL

SHEET L16

Plot Date 11/3/11 10:32 AM Plotted By: Kurt Fredericks
File Path: C:\STANDARDS\-U-B LANDSCAPE CITY STANDARDS SYRACUSE\SYRACUSE LANDSCAPE STDS.DWG

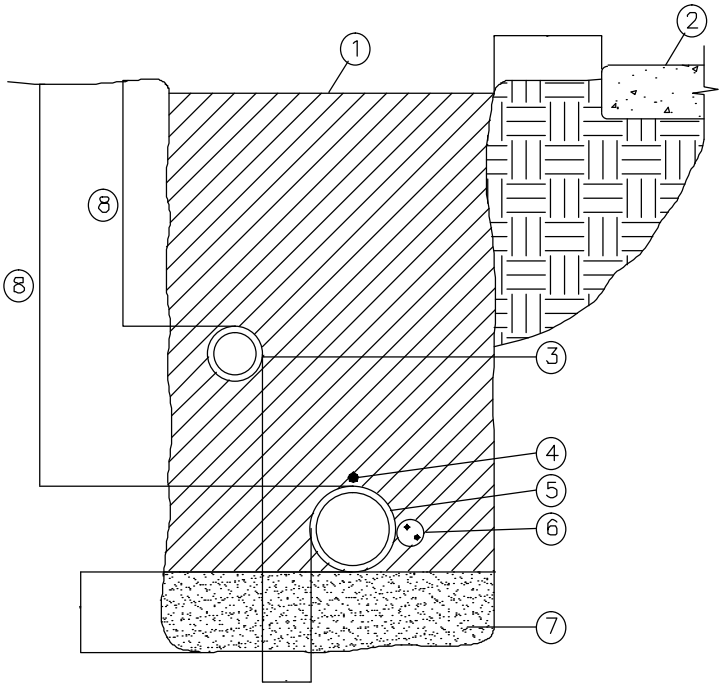

1. BACKFILL MATERIAL – SEE NOTES, COMPACT TO 90% MIN.
2. ADJACENT HARD SURFACE
3. NON–PRESSURE LATERAL LINE
4. MAIN LINE LOCATOR WIRE. BURIED WITH ALL MAINLINES
5. PRESSURE MAIN LINE
6. DIRECT BURIAL, LOW VOLTAGE CONTROL WIRES; TO BE BURIED AND TAPED AT 10' INCREMENTS. LOCATE DIRECTLY ADJACENT TO MAIN LINE
7. BEDDING MATERIAL – SEE NOTES
8. PIPE DEPTHS – SEE NOTES

NOTE:
SEE SLEEVING DETAIL FOR TRENCHING IN PAVED AREAS.

TRENCH DETAIL

SCALE: NOT TO SCALE

STATEMENT OF USE
THIS DOCUMENT AND ANY ILLUSTRATIONS HEREON ARE PROVIDED AS STANDARD CONSTRUCTION DETAILS WITHIN SYRACUSE CITY. DEVIATION FROM THIS DOCUMENT REQUIRES APPROVAL OF SYRACUSE CITY. SYRACUSE CITY CORPORATION CAN NOT BE HELD LIABLE FOR MISUSE OR CHANGES REGARDING THIS DOCUMENT.

NO.	REVISION DESCRIPTION	BY	APR.	DATE

CAD FILE: SYRACUSE LANDSCAPE STDS
DRAWN BY: JDM/ELC
DESIGN BY: NQS
CHECKED BY: RCW
LAST UPDATED: 11/3/2011
DATE ADOPTED: XX/XX/XX

SYRACUSE EST. CITY 1935

DEVELOPMENT STANDARDS
SYRACUSE CITY CORPORATION

TRENCH DETAIL

SHEET
L17

Plot Date: 1/5/2011 10:02 AM Plotted By: Kurt S Fredericks
File Path: C:\STANDARDS\L-11-B LANDSCAPE CITY STANDARDS SYRACUSE\SYRACUSE LANDSCAPE STDS.DWG

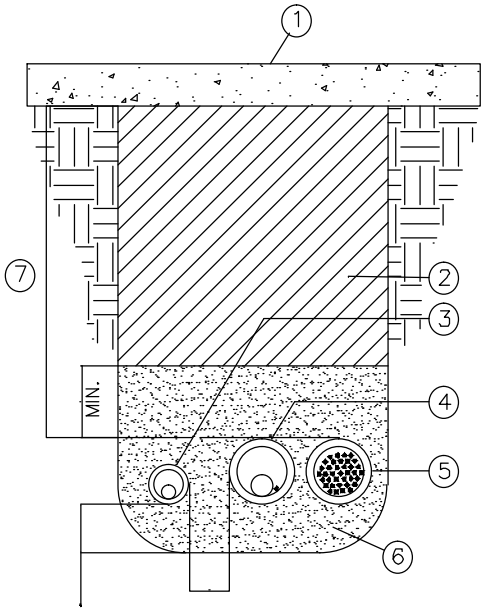

1. HARDSCAPE SURFACE – SEE PLANS
2. BACKFILL MATERIAL – SEE NOTES
3. LATERAL LINE WITH SLEEVE
4. PRESSURE MAIN LINE AND LOCATOR WIRE WITH SLEEVE
5. CONTROL WIRE SLEEVE (SEE PLANS FOR SIZE)
6. BEDDING MATERIAL – SEE NOTES
7. MINIMUM COVER:
   12" UNDER WALKS
   18" UNDER STREETS

NOTES:

1) SLEEVES 4" AND SMALLER USE PVC SCH. 40 PIPE.

2) SLEEVES >4" USE PVC CLASS 200 PIPE.

3) ALL SLEEVES SHALL BE TWO (2) TIMES LARGER THAN DIAMETER OF PIPE TO BE SLEEVED, UNLESS NOTED OTHERWISE ON THE PLANS.

4) INSTALL SLEEVES AT A DEPTH SUFFICIENT TO AVOID CONFLICT WITH OTHER UTILITIES AND MAINS.

SLEEVE DETAIL

SCALE: NOT TO SCALE

STATEMENT OF USE

THIS DOCUMENT AND ANY ILLUSTRATIONS HEREON ARE PROVIDED AS STANDARD CONSTRUCTION DETAILS WITHIN SYRACUSE CITY. DEVIATION FROM THIS DOCUMENT REQUIRES APPROVAL OF SYRACUSE CITY. SYRACUSE CITY CORPORATION CAN NOT BE HELD LIABLE FOR MISUSE OR CHANGES REGARDING THIS DOCUMENT.

NO.	REVISION DESCRIPTION	BY	APR.	DATE

CAD FILE: SYRACUSE LANDSCAPE STDS
DRAWN BY: JDM/ELC
DESIGN BY: NQS
CHECKED BY: RCW
LAST UPDATED: 11/3/2011
DATE ADOPTED: XX/XX/XX

SYRACUSE EST. CITY 1935

DEVELOPMENT STANDARDS
SYRACUSE CITY CORPORATION

SLEEVE DETAIL

SHEET L18

Plot Date: 11/3/2011 10:32 AM Plotted By: Kurt S Fredericks
File Path: F:\STANDARDS\-JUB LANDSCAPE CITY STANDARDS SYRACUSE\SYRACUSE LANDSCAPE STDS.DWG

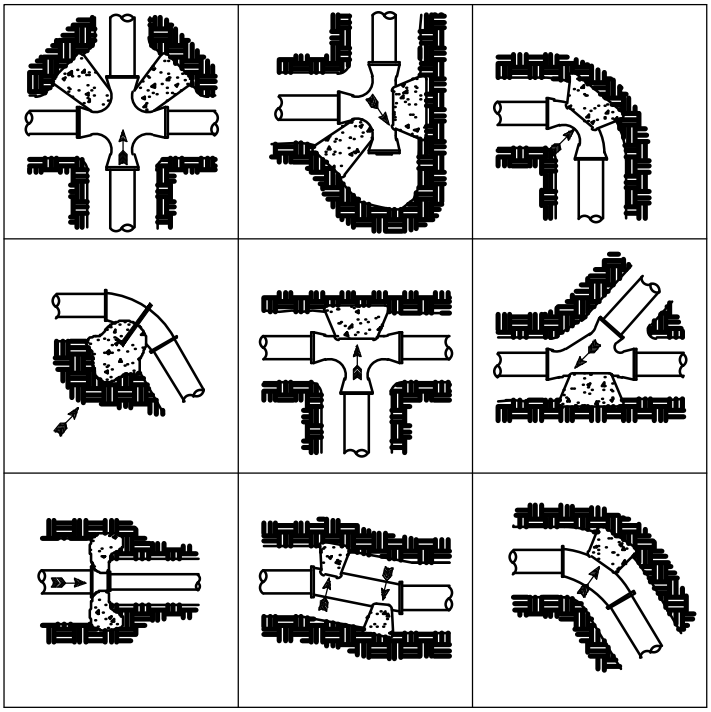

DIRECTION OF THRUST (TYP.) INSTALL THRUST BLOCKS ON ALL 3" AND LARGER FITTINGS AND VALVES.

TABLE NOTES:

1. IN USING THE TABLE BELOW, USE THE MAXIMUM INTERNAL PRESSURE ANTICIPATED (I.E. HYDROSTATIC TEST PRESSURE, POSSIBLE SURGE PRESSURE DUE TO PUMP SHUTOFF, ETC.). UNLESS DIRECTED OTHERWISE, ASSUME A WATER PRESSURE OF 200 PSI FOR YOUR CALCULATIONS.
2. SEE SOILS REPORT FOR BEARING STRENGTH OF SOIL. IN THE ABSENCE OF A SOILS REPORT, AN AVERAGE SOIL (SPADABLE MEDIUM CLAY) CAN BE ASSUMED TO HAVE A BEARING STRENGTH OF 2000 P.S.F.

SIDE THRUST PER 1 PSI				
PIPE SIZE	DEAD END OR TEE	90° ELBOW	45° ELBOW	22 ½° ELBOW
4	19	27	15	7
6	39	55	30	15
8	67	94	51	26
10	109	154	84	43
12	155	218	119	61

THRUST BLOCK DETAIL

SCALE: NOT TO SCALE

STATEMENT OF USE

THIS DOCUMENT AND ANY ILLUSTRATIONS HEREON ARE PROVIDED AS STANDARD CONSTRUCTION DETAILS WITHIN SYRACUSE CITY. DEVIATION FROM THIS DOCUMENT REQUIRES APPROVAL OF SYRACUSE CITY. SYRACUSE CITY CORPORATION CAN NOT BE HELD LIABLE FOR MISUSE OR CHANGES REGARDING THIS DOCUMENT.

NO.	REVISION DESCRIPTION	BY	APR.	DATE

CAD FILE: SYRACUSE LANDSCAPE STDS
DRAWN BY: JDM/ELC
DESIGN BY: NQS
CHECKED BY: RCW
LAST UPDATED: 11/3/2011
DATE ADOPTED: XX/XX/XX

SYRACUSE EST. CITY 1935

DEVELOPMENT STANDARDS
SYRACUSE CITY CORPORATION

THRUST BLOCK DETAIL

SHEET L19

Plot Date: 11/3/11 10:04 PM Plotted By: Kurt Fredericks
File Path: F:\STANDARDS\-JUB LANDSCAPE CITY STANDARDS SYRACUSE\SYRACUSE LANDSCAPE STDS.DWG

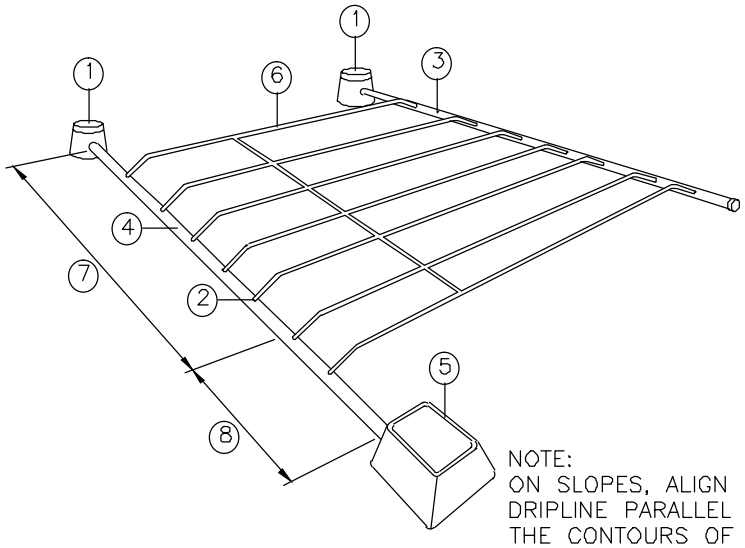

NOTE:
ON SLOPES, ALIGN DRIPLINE PARALLEL TO THE CONTOURS OF THE SLOPE.

1. MANUAL FLUSH VALVE PLUMBED TO PVC IN LOWEST POINT
2. TLIAPVC CONNECTOR
3. 1½" PVC EXHAUST HEADER (SEE NOTES FOR DEPTH)
4. 1½" PVC SUPPLY HEADER (SEE NOTES FOR DEPTH)
5. REMOTE CONTROL VALVE ASSEMBLY
6. DRIPLINE TUBING LATERAL – INSTALL AT GRADE UNDER MULCH AND ON TOP OF FABRIC (IF FABRIC IS USED)
7. ON SLOPES, USE THE SPECIFIED DRIPLINE SPACING ON THE TOP ⅔ OF THE SLOPE
8. ON SLOPES, USE THE SPECIFIED DRIPLINE SPACING PLUS 25% ON THE BOTTOM ⅓ OF SLOPE

DRIPLINE CIRCUIT LAYOUT

SCALE: NOT TO SCALE

STATEMENT OF USE
THIS DOCUMENT AND ANY ILLUSTRATIONS HEREON ARE PROVIDED AS STANDARD CONSTRUCTION DETAILS WITHIN SYRACUSE CITY. DEVIATION FROM THIS DOCUMENT REQUIRES APPROVAL OF SYRACUSE CITY. SYRACUSE CITY CORPORATION CAN NOT BE HELD LIABLE FOR MISUSE OR CHANGES REGARDING THIS DOCUMENT.

NO.	REVISION DESCRIPTION	BY	APR.	DATE

CAD FILE: SYRACUSE LANDSCAPE STDS
DRAWN BY: JDM/ELC
DESIGN BY: NQS
CHECKED BY: RCW
LAST UPDATED: 11/3/2011
DATE ADOPTED: XX/XX/XX

SYRACUSE EST. CITY 1935

DEVELOPMENT STANDARDS
SYRACUSE CITY CORPORATION

DRIPLINE CIRCUIT LAYOUT

SHEET
L20

Plot Date: 1/5/2011 10:04 PM Plotted By: Kurt S Fredericks
File Path: F:\STANDARDS\-JUB LANDSCAPE CITY STANDARDS SYRACUSE\SYRACUSE LANDSCAPE STDS.DWG

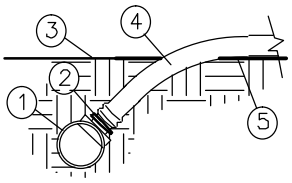

SECTION VIEW

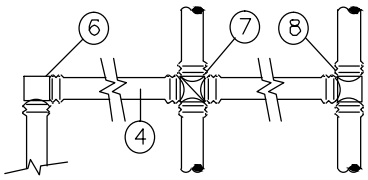

PLAN VIEW

1. 1 1/2" PVC HEADER
2. TLIAPVC CONNECTION
3. PLANTING BED FINISHED GRADE
4. DRIPLINE/BLANK TUBING
5. WEED BARRIER FABRIC (IF USED)
6. ELBOW
7. CROSS
8. TEE

DRIPLINE CONNECTIONS

SCALE: NOT TO SCALE

STATEMENT OF USE

THIS DOCUMENT AND ANY ILLUSTRATIONS HEREON ARE PROVIDED AS STANDARD CONSTRUCTION DETAILS WITHIN SYRACUSE CITY. DEVIATION FROM THIS DOCUMENT REQUIRES APPROVAL OF SYRACUSE CITY. SYRACUSE CITY CORPORATION CAN NOT BE HELD LIABLE FOR MISUSE OR CHANGES REGARDING THIS DOCUMENT.

NO.	REVISION DESCRIPTION	BY	APR.	DATE

CAD FILE: SYRACUSE LANDSCAPE STDS
DRAWN BY: JDM/ELC
DESIGN BY: NQS
CHECKED BY: RCW
LAST UPDATED: 11/3/2011
DATE ADOPTED: XX/XX/XX

SYRACUSE EST. CITY 1935

DEVELOPMENT STANDARDS
SYRACUSE CITY CORPORATION

DRIPLINE CONNECTIONS

SHEET
L21

Plot Date: 11/3/11 10:04 PM Plotted By: Kurt Fredericks
File Path: F:\STANDARDS\-JOB LANDSCAPE CITY STANDARDS SYRACUSE\SYRACUSE LANDSCAPE STDS.DWG

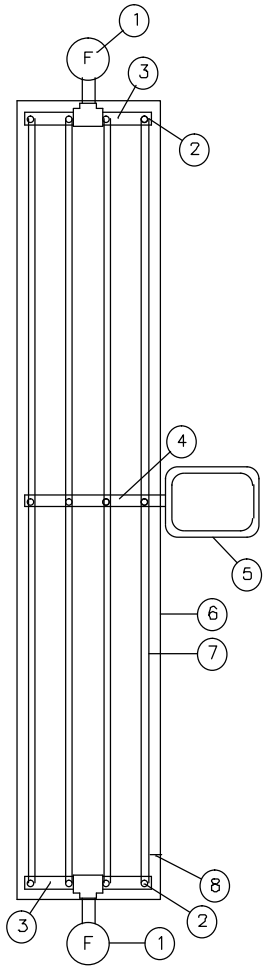

CENTER FEED LAYOUT

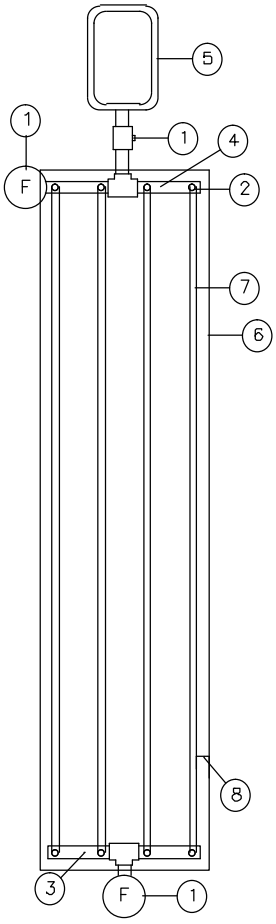

END FEED LAYOUT

1. MANUAL FLUSH VALVE PLUMBED TO PVC IN LOWEST POINT
2. TLIAPVC CONNECTOR
3. 1½" PVC EXHAUST HEADER
4. 1½" PVC SUPPLY HEADER
5. REMOTE CONTROL VALVE ASSEMBLY
6. AREA PERIMETER
7. DRIPLINE TUBING LATERAL
8. PERIMETER DRIPLINE TUBING LATERALS 2" TO 4" FROM EDGE
9. DRIPLINE TEE

INLINE DRIP LAYOUTS

SCALE: NOT TO SCALE

STATEMENT OF USE
THIS DOCUMENT AND ANY ILLUSTRATIONS HEREON ARE PROVIDED AS STANDARD CONSTRUCTION DETAILS WITHIN SYRACUSE CITY. DEVIATION FROM THIS DOCUMENT REQUIRES APPROVAL OF SYRACUSE CITY. SYRACUSE CITY CORPORATION CAN NOT BE HELD LIABLE FOR MISUSE OR CHANGES REGARDING THIS DOCUMENT.

NO.	REVISION DESCRIPTION	BY	APR.	DATE

CAD FILE: SYRACUSE LANDSCAPE STDS
DRAWN BY: JDM/ELC
DESIGN BY: NQS
CHECKED BY: RCW
LAST UPDATED: 11/3/2011
DATE ADOPTED: XX/XX/XX

SYRACUSE EST. CITY 1935

DEVELOPMENT STANDARDS
SYRACUSE CITY CORPORATION

INLINE DRIP LAYOUTS

SHEET
L22

Plot Date 11/3/2011 10:06 PM Plotted By: Kurt S Fredericks
File Path: C:\STANDARDS\L-11-B LANDSCAPE CITY STANDARDS SYRACUSE SYRACUSE LANDSCAPE STDS.DWG

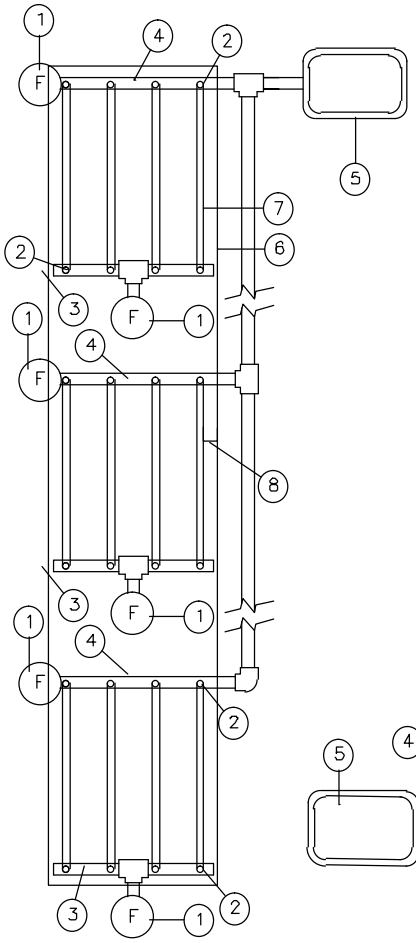

ISLAND LAYOUT

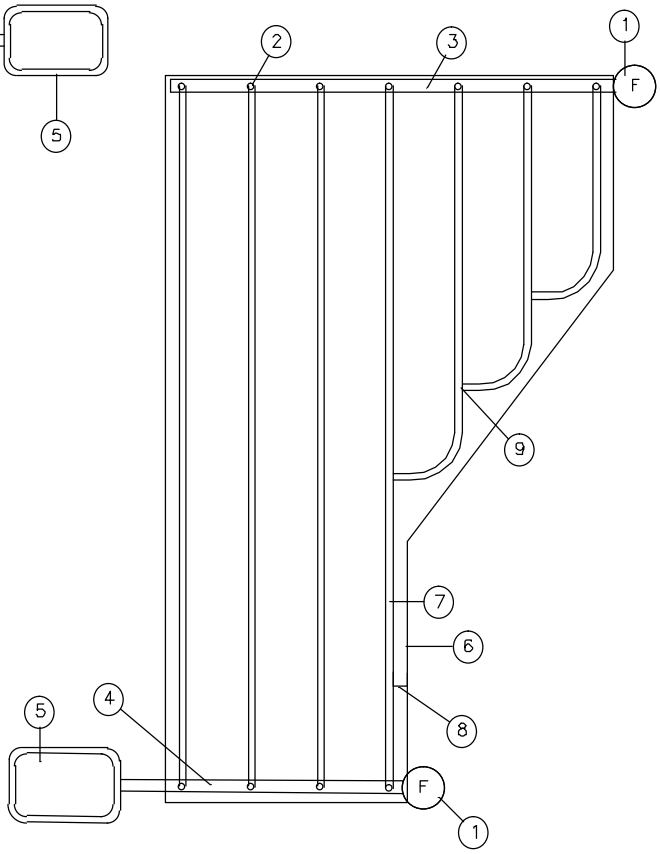

IRREGULAR LAYOUT

1. MANUAL FLUSH VALVE PLUMBED TO PVC IN LOWEST POINT
2. TLIAPVC CONNECTOR
3. 1½" PVC EXHAUST HEADER
4. 1½" PVC SUPPLY HEADER
5. REMOTE CONTROL VALVE ASSEMBLY
6. AREA PERIMETER
7. DRIPLINE TUBING LATERAL
8. PERIMETER DRIPLINE TUBING LATERALS 2" TO 4" FROM EDGE
9. DRIPLINE TEE

INLINE DRIP LAYOUTS

SCALE: NOT TO SCALE

STATEMENT OF USE

THIS DOCUMENT AND ANY ILLUSTRATIONS HEREON ARE PROVIDED AS STANDARD CONSTRUCTION DETAILS WITHIN SYRACUSE CITY. DEVIATION FROM THIS DOCUMENT REQUIRES APPROVAL OF SYRACUSE CITY. SYRACUSE CITY CORPORATION CAN NOT BE HELD LIABLE FOR MISUSE OR CHANGES REGARDING THIS DOCUMENT.

NO.	REVISION DESCRIPTION	BY	APR.	DATE

CAD FILE: SYRACUSE LANDSCAPE STDS
DRAWN BY: JDM/ELC
DESIGN BY: NQS
CHECKED BY: RCW
LAST UPDATED: 11/3/2011
DATE ADOPTED: XX/XX/XX

SYRACUSE EST. CITY 1935

DEVELOPMENT STANDARDS
SYRACUSE CITY CORPORATION

INLINE DRIP LAYOUTS

SHEET L23

Plot Date: 11/3/2011 10:06 PM Plotted By: Kurt S Fredericks
File Path: C:\STANDARDS\L-JUB LANDSCAPE CITY STANDARDS SYRACUSE\SYRACUSE LANDSCAPE STDS.DWG

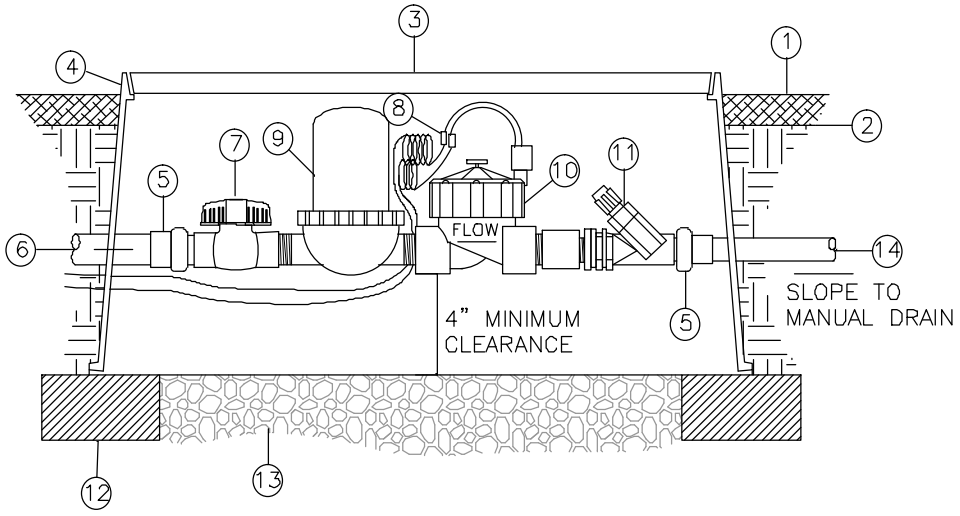

1. PLANTING BED MULCH, SEE PLANTING NOTES FOR DEPTH
2. FINISH GRADE
3. CARSON 1220 18" JUMBO SERIES VALVE BOX OR APPROVED EQUAL
4. 1" MAX. DEPTH
5. ACTION UNION – PART 18010–XX
   PART 18011–XX
   PART 18012–XX
6. FLOW FROM MAIN LINE
7. PLASTIC PVC BALL VALVE
8. 3M DBR/Y WATER TIGHT CONNECTORS
9. INLINE 1" FILTER
10. REMOTE CONTOL VALVE – SEE IRRIGATION EQUIPMENT SCHEDULE
11. INLINE PRESSURE REGULATOR
12. CONCRETE PAVERS ONLY
13. 4" MIN. DEPTH WASHED PEA GRAVEL
14. PVC SUPPLY HEADER

DRIP ZONE REMOTE CONTROL VALVE ASSEMBLY

SCALE: NOT TO SCALE

STATEMENT OF USE
THIS DOCUMENT AND ANY ILLUSTRATIONS HEREON ARE PROVIDED AS STANDARD CONSTRUCTION DETAILS WITHIN SYRACUSE CITY. DEVIATION FROM THIS DOCUMENT REQUIRES APPROVAL OF SYRACUSE CITY. SYRACUSE CITY CORPORATION CAN NOT BE HELD LIABLE FOR MISUSE OR CHANGES REGARDING THIS DOCUMENT.

NO.	REVISION DESCRIPTION	BY	APR.	DATE

CAD FILE: SYRACUSE LANDSCAPE STDS
DRAWN BY: JDM/ELC
DESIGN BY: NQS
CHECKED BY: RCW
LAST UPDATED: 11/3/2011
DATE ADOPTED: XX/XX/XX

SYRACUSE EST. CITY 1935

DEVELOPMENT STANDARDS
SYRACUSE CITY CORPORATION

DRIP ZONE REMOTE CONTROL VALVE ASSEMBLY DETAIL

SHEET
L24

Plot Date: 11/3/2011 10:06 PM Plotted By: Kurt S Fredericks
File Path: F:\STANDARDS\L-JUB LANDSCAPE CITY STANDARDS SYRACUSE\SYRACUSE LANDSCAPE STDS.DWG

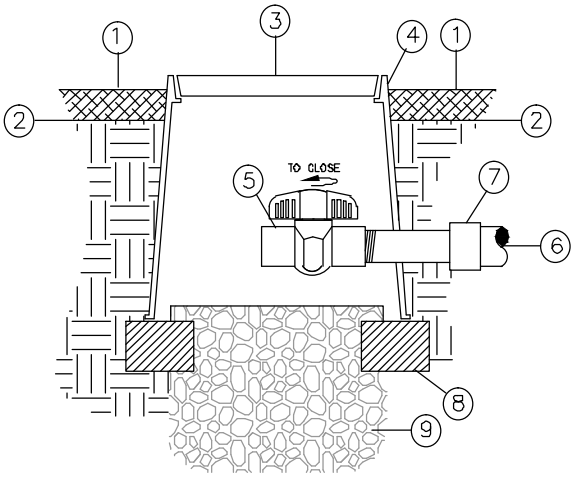

1. PLANTING BED MULCH, SEE PLANTING NOTES FOR DEPTH
2. FINISH GRADE
3. PLASTIC VALVE BOX CARSON 809 OR EQUAL FLUSH WITH GRADE
4. 1" MAX. DEPTH
5. BALL VALVE
6. PVC EXHAUST HEADER
7. PVC REDUCER ADAPER (S X 1/2") FPT (SIZE AS REQ'D)
8. CONCRETE PAVERS ONLY
9. 1 C.F. WASHED PEA GRAVEL

DRIP FLUSH VALVE (PLUMBED TO PVC)

SCALE: NOT TO SCALE

STATEMENT OF USE

THIS DOCUMENT AND ANY ILLUSTRATIONS HEREON ARE PROVIDED AS STANDARD CONSTRUCTION DETAILS WITHIN SYRACUSE CITY. DEVIATION FROM THIS DOCUMENT REQUIRES APPROVAL OF SYRACUSE CITY. SYRACUSE CITY CORPORATION CAN NOT BE HELD LIABLE FOR MISUSE OR CHANGES REGARDING THIS DOCUMENT.

NO.	REVISION DESCRIPTION	BY	APR.	DATE

CAD FILE: SYRACUSE LANDSCAPE STDS
DRAWN BY: JDM/ELC
DESIGN BY: NQS
CHECKED BY: RCW
LAST UPDATED: 11/3/2011
DATE ADOPTED: XX/XX/XX

SYRACUSE EST. CITY 1935

DEVELOPMENT STANDARDS
SYRACUSE CITY CORPORATION

DRIP FLUSH VALVE DETAIL

SHEET
L25

Plot Date: 1/5/2011 10:05 AM Plotted By: Kurt Fredericks
File Path: F:\STANDARDS\-JUB LANDSCAPE CITY STANDARDS SYRACUSE\SYRACUSE LANDSCAPE STDS.DWG

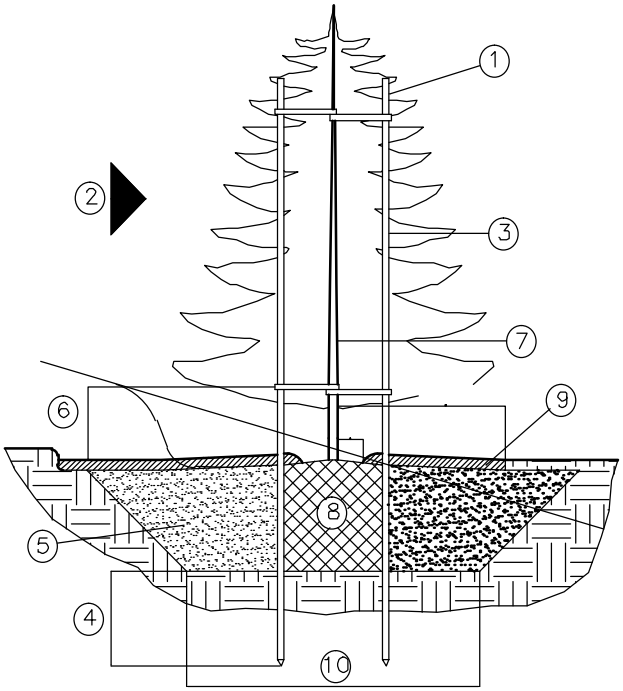

1. 2" DIA. OR 2"X2" SQ. x10' STRAIGHT WOODEN STAKE (2 REQUIRED)
2. PREVAILING WIND DIRECTION
3. V.I.T. CINCH–TIE VINYL TREE TIE (2 PER STAKE, LENGTH AS REQUIRED). SECURE TO STAKE W/ GALV. NAIL, 1 PER TIE
4. 24" MIN.
5. SEE TREE/SHRUB PLANTING DETAIL
6. 18" MAX.
7. TREE TRUNK
8. ROOTBALL
9. 3" LAYER SHREDDED BARK MULCH AROUND EACH TREE IN 3' RADIUS CIRCLE (WHEN IN TURF)
10. 2x ROOTBALL DIA. MIN. W/ 45° SIDES

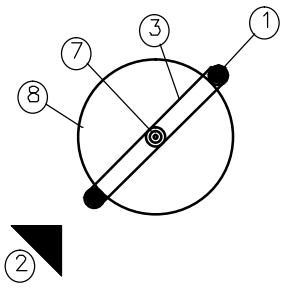

EVERGREEN TREE STAKING

SCALE: NOT TO SCALE

STATEMENT OF USE

THIS DOCUMENT AND ANY ILLUSTRATIONS HEREON ARE PROVIDED AS STANDARD CONSTRUCTION DETAILS WITHIN SYRACUSE CITY. DEVIATION FROM THIS DOCUMENT REQUIRES APPROVAL OF SYRACUSE CITY. SYRACUSE CITY CORPORATION CAN NOT BE HELD LIABLE FOR MISUSE OR CHANGES REGARDING THIS DOCUMENT.

NO.	REVISION DESCRIPTION	BY	APR.	DATE

CAD FILE: SYRACUSE LANDSCAPE STDS
DRAWN BY: JDM/ELC
DESIGN BY: NQS
CHECKED BY: RCW
LAST UPDATED: 11/3/2011
DATE ADOPTED: XX/XX/XX

SYRACUSE EST. CITY 1935

DEVELOPMENT STANDARDS
SYRACUSE CITY CORPORATION

EVERGREEN TREE STAKING DETAIL

SHEET L26

Plot Date: 1/5/2011 6:01 PM Plotted By: Kurt Fredericks
File Path: F:\STANDARDS\JOB LANDSCAPE CITY STANDARDS SYRACUSE\SYRACUSE LANDSCAPE STDS.DWG

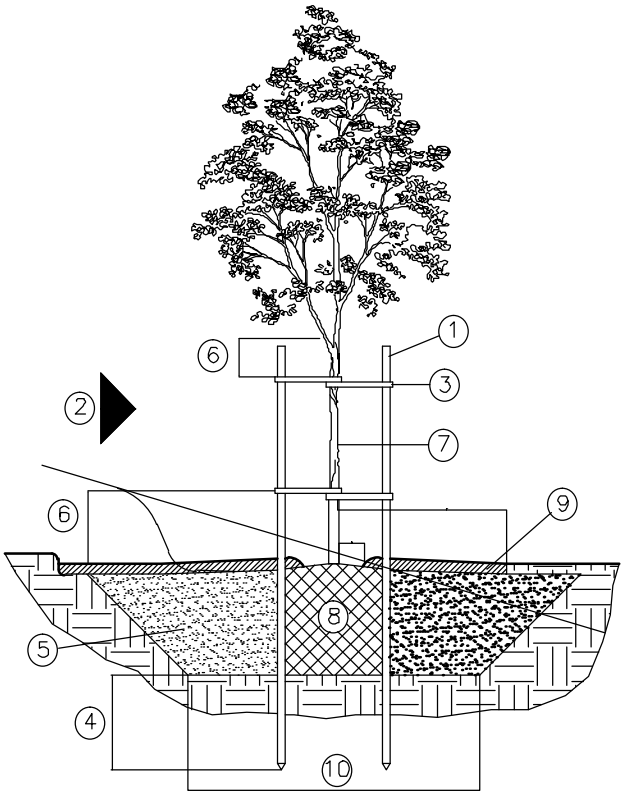

1. 2" DIA. OR 2"X2" SQ. x10' STRAIGHT WOODEN STAKE (2 REQUIRED)
2. PREVAILING WIND DIRECTION
3. V.I.T. CINCH–TIE VINYL TREE TIE (2 PER STAKE, LENGTH AS REQUIRED). SECURE TO STAKE W/ GALV. NAIL, 1 PER TIE
4. 24" MIN.
5. SEE TREE/SHRUB PLANTING DETAIL
6. 6" MAX.
7. TREE TRUNK
8. ROOTBALL
9. 3" LAYER SHREDDED BARK MULCH AROUND EACH TREE (3' RADIUS CIRCLE WHEN IN TURF)
10. 2x ROOTBALL DIA. MIN. W/ 45° SIDES

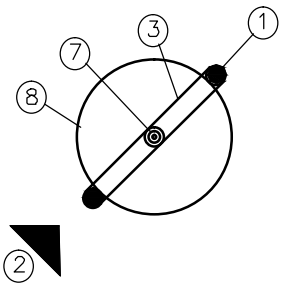

DECIDUOUS TREE STAKING

SCALE: NOT TO SCALE

STATEMENT OF USE

THIS DOCUMENT AND ANY ILLUSTRATIONS HEREON ARE PROVIDED AS STANDARD CONSTRUCTION DETAILS WITHIN SYRACUSE CITY. DEVIATION FROM THIS DOCUMENT REQUIRES APPROVAL OF SYRACUSE CITY. SYRACUSE CITY CORPORATION CAN NOT BE HELD LIABLE FOR MISUSE OR CHANGES REGARDING THIS DOCUMENT.

NO.	REVISION DESCRIPTION	BY	APR.	DATE

CAD FILE: SYRACUSE LANDSCAPE STDS
DRAWN BY: JDM/ELC
DESIGN BY: NQS
CHECKED BY: RCW
LAST UPDATED: 11/3/2011
DATE ADOPTED: XX/XX/XX

SYRACUSE EST. CITY 1935

DEVELOPMENT STANDARDS
SYRACUSE CITY CORPORATION

DECIDUOUS TREE STAKING DETAIL

SHEET L27

Plot Date: 1/5/2011 6:01:01 PM Plotted By: Kurt S Fredericks
File Path: F:\STANDARDS\-JOB LANDSCAPE CITY STANDARDS SYRACUSE\SYRACUSE LANDSCAPE STDS.DWG

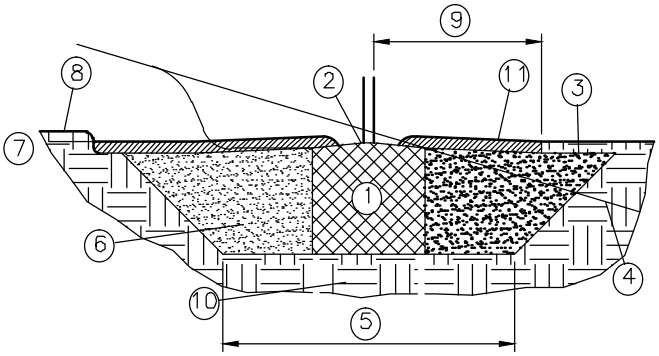

1. ROOTBALL
2. CROWN – AT OR UP TO 1" ABOVE FINISH GRADE
3. FINISH GRADE
4. FINISH GRADE AT SLOPE (WHERE OCCURS)
5. 2x ROOTBALL DIA. MIN. W/ 45° SIDES
6. BACKFILL MIX (SEE PLANTING NOTES)
7. 2"
8. TOP OF PAVING (WHERE APPLICABLE)
9. 3' RADIUS OF SHREDDED BARK MULCH WHEN TREE IS LOCATED IN TURF
10. UNDISTURBED SOIL
11. 3" LAYER SHREDDED BARK MULCH

TREE / SHRUB PLANTING

SCALE: NOT TO SCALE

STATEMENT OF USE

THIS DOCUMENT AND ANY ILLUSTRATIONS HEREON ARE PROVIDED AS STANDARD CONSTRUCTION DETAILS WITHIN SYRACUSE CITY. DEVIATION FROM THIS DOCUMENT REQUIRES APPROVAL OF SYRACUSE CITY. SYRACUSE CITY CORPORATION CAN NOT BE HELD LIABLE FOR MISUSE OR CHANGES REGARDING THIS DOCUMENT.

NO.	REVISION DESCRIPTION	BY	APR.	DATE

CAD FILE: SYRACUSE LANDSCAPE STDS
DRAWN BY: JDM/ELC
DESIGN BY: NQS
CHECKED BY: RCW
LAST UPDATED: 11/3/2011
DATE ADOPTED: XX/XX/XX

SYRACUSE EST. CITY 1935

DEVELOPMENT STANDARDS
SYRACUSE CITY CORPORATION

TREE AND SHRUB PLANING DETAIL

SHEET L28

Plot Date: 11/3/2011 6:01 PM Plotted By: Kurt S Fredericks
File Path: F:\STANDARDS\L-11-B LANDSCAPE CITY STANDARDS SYRACUSE\SYRACUSE LANDSCAPE STDS.DWG

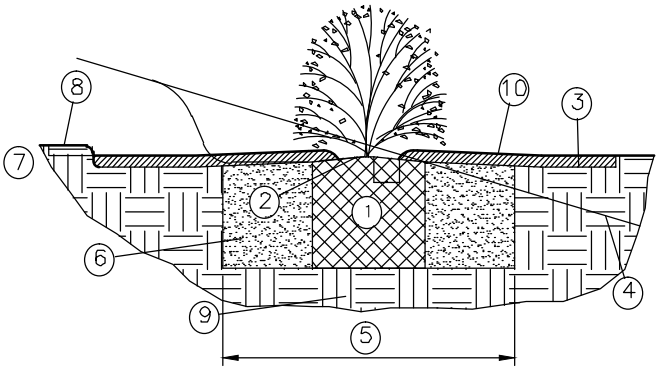

1. ROOTBALL
2. CROWN – AT FINISH GRADE
3. FINISH GRADE
4. FINISH GRADE AT SLOPE (WHERE OCCURS)
5. 2x ROOTBALL DIA. MIN.
6. BACKFILL MIX (SEE PLANTING NOTES)
7. 2"
8. TOP OF PAVING (WHERE APPLICABLE)
9. UNDISTURBED SOIL
10. 3" LAYER SHREDDED BARK MULCH

PERENNIAL PLANTING

SCALE: NOT TO SCALE

STATEMENT OF USE

THIS DOCUMENT AND ANY ILLUSTRATIONS HEREON ARE PROVIDED AS STANDARD CONSTRUCTION DETAILS WITHIN SYRACUSE CITY. DEVIATION FROM THIS DOCUMENT REQUIRES APPROVAL OF SYRACUSE CITY. SYRACUSE CITY CORPORATION CAN NOT BE HELD LIABLE FOR MISUSE OR CHANGES REGARDING THIS DOCUMENT.

NO.	REVISION DESCRIPTION	BY	APR.	DATE

CAD FILE: SYRACUSE LANDSCAPE STDS
DRAWN BY: JDM/ELC
DESIGN BY: NQS
CHECKED BY: RCW
LAST UPDATED: 11/3/2011
DATE ADOPTED: XX/XX/XX

SYRACUSE EST. CITY 1935

DEVELOPMENT STANDARDS
SYRACUSE CITY CORPORATION

PERENNIAL PLANTING DETAIL

SHEET L29

Plot Date: 11/3/11 10:06 PM Plotted By: Kurt Fredericks
File Path: F:\STANDARDS\-JOB LANDSCAPE CITY STANDARDS SYRACUSE\SYRACUSE LANDSCAPE STDS.DWG

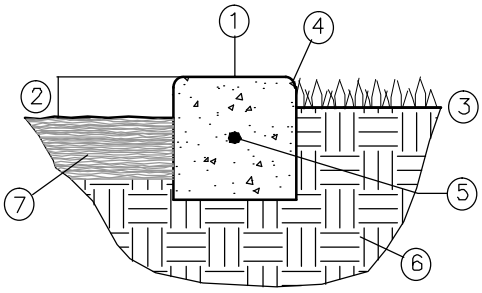

NOTE:
PROVIDE CONSTRUCTION OR CONTROL JOINTS AT 5' O.C. MAX. AND EXPANSION JOINTS WHERE MOWSTRIP ABUTS ANY MASONRY TYPE IMPROVEMENT.

1. 6" X 6" CONCRETE MOW STRIP (MIN. 2000 PSI AT 28 DAYS)
2. FINISH GRADE AT 2" FOR GROUNDCOVER AREAS
3. FINISH GRADE FOR LAWN AREAS: 1" FOR SEED; 1–1/2" FOR SOD
4. ½" RADIUS TROWELED EDGES (TYP.)
5. #3 REBAR CONT. (LAP 12" AT SPLICES)
6. UNDISTURBED OR 90% COMPACTED SUBGRADE
7. 3" LAYER SHREDDED BARK MULCH IN PLANTER BEDS

6" CONCRETE MOWSTRIP

SCALE: NOT TO SCALE

STATEMENT OF USE
THIS DOCUMENT AND ANY ILLUSTRATIONS HEREON ARE PROVIDED AS STANDARD CONSTRUCTION DETAILS WITHIN SYRACUSE CITY. DEVIATION FROM THIS DOCUMENT REQUIRES APPROVAL OF SYRACUSE CITY. SYRACUSE CITY CORPORATION CAN NOT BE HELD LIABLE FOR MISUSE OR CHANGES REGARDING THIS DOCUMENT.

NO.	REVISION DESCRIPTION	BY	APR.	DATE

CAD FILE: SYRACUSE LANDSCAPE STDS
DRAWN BY: JDM/ELC
DESIGN BY: NQS
CHECKED BY: RCW
LAST UPDATED: 11/3/2011
DATE ADOPTED: XX/XX/XX

SYRACUSE EST. CITY 1935

DEVELOPMENT STANDARDS
SYRACUSE CITY CORPORATION

6 INCH CONCRETE MOWSTRIP DETAIL

SHEET
L30

Plot Date: 1/5/2011 10:06 PM Plotted By: Kurt Fredericks
File Path: F:\STANDARDS\L-J-B LANDSCAPE CITY STANDARDS\SYRACUSE\SYRACUSE LANDSCAPE ST-3.DWG

COUNCIL AGENDA

February 11, 2014

Agenda Item **"15"** **Municipal Wastewater Planning Program**

Staff Resource
Any questions on this can be directed to Public Works Director, Robert Whiteley

Factual Summation
The Utah Department of Environmental Quality, Division of Water Quality has established the Utah Sanitary Sewer Management Program for the purpose of monitoring wastewater facilities throughout the State. In order to meet the reporting requirements of the Utah Sanitary Sewer Program the Division of Water Quality has implemented the Municipal Wastewater Planning Program which enables the State, with the help of municipalities, to identify and solve potential problems before they become serious and costly. As a participating member of the Municipal Wastewater Planning Program, the State requests that the City submit an annual Municipal Wastewater Planning Program Self-Assessment Report.

In addition to helping to identify potential problems before they become serious and costly, completing the self-assessment forms offer three additional benefits to the City.

1. The self-assessment forms meet the reporting requirements of the mandatory Utah Sanitary Sewer Management Program.
2. Submitting the self-assessment gives the City points on the Utah Wastewater Project Priority List/System which is used to allocate funds under various grant and loan programs.
3. Certified wastewater operators who complete the forms will be given operational continuing educational units for each form returned.

Recommendation
Adopt the proposed resolution indicating that the city council has reviewed the assessment and will establish a process for submitting annual reports in the future to the Division of Water Quality.

RESOLUTION NO. R14-11

A RESOLUTION OF THE SYRACUSE CITY COUNCIL AFFIRMING THE SYRACUSE CITY COUNCIL'S REVIEW OF THE MUNICIPAL WASTEWATER PLANNING PROGRAM SELF-ASSESSMENT AND ACCEPTANCE FOR FUTURE REPORTING OF THE SAME.

WHEREAS, Syracuse City participates in the State of Utah's Municipal Wastewater Planning Program; and

WHEREAS, the State of Utah requests that municipalities with wastewater facilities submit an annual self-assessment report to the Utah Department of Environmental, Division of Water Quality; and

WHEREAS, the Syracuse City Public Works Department has prepared the city's annual self-assessment report (attached as Exhibit "A") for the Mayor and City Council to review; and

WHEREAS, the Mayor and City Council have reviewed the current Municipal Wastewater Planning Program Self-assessment Report; and

WHEREAS, all past, present, and future submittals of the Municipal Wastewater Planning Program Self-assessment Report shall be kept on file with the city and made available to the public for review; and

WHEREAS, the Mayor and City Council accepts the practice for current and future report submittals made administratively to the Utah Department of Environmental, Division of Water Quality as required with the understanding that the report may be reviewed at any time.

NOW, THEREFORE, BE IT RESOLVED BY THE CITY COUNCIL OF SYRACUSE CITY, STATE OF UTAH, AS FOLLOWS:

Section 1. That the City Council of Syracuse affirms that it has reviewed the city's current Municipal Wastewater Planning Program Self-assessment Report and has taken all appropriate actions necessary to maintain effluent requirements contained in UPDES Permit.

Section 2. That the Mayor is hereby authorized to execute any documents necessary to complete the current and future Municipal Wastewater Planning Program Self-assessment Reports and that city staff is hereby directed to submit said reports together with this resolution to the Utah Department of Environmental Quality, Division of Water Quality by the required annual deadline.

Section 3. This resolution shall become effective immediately upon its passage.

PASSED AND ADOPTED BY THE CITY COUNCIL OF SYRACUSE CITY, STATE OF UTAH, THIS 11th DAY OF FEBRUARY, 2014.

SYRACUSE CITY

ATTEST:

_____ By:_____

Cassie Z. Brown, City Recorder Terry Palmer, Mayor

EXHIBIT A

EXHIBIT A

Municipal Wastewater Planning Program (MWPP)
Financial Evaluation Section

Owner Name: *SYRACUSE*

Name and Title of Contact Person:

Robert Whiteley

Public Works Director

Phone: 801-825-7235

E-mail: RCW@syracuseut.com

PLEASE SUBMIT TO STATE BY: March 1, 2014

Mail to: MWPP - Department of Environmental Quality
c/o Paul Krauth, P.E.
Division of Water Quality
195 North 1950 West
P.O. Box 144870
Salt Lake City, Utah 84114-4870
Phone : (801) 536-4346

NOTE: This questionnaire has been compiled for your benefit by a state sponsored task force comprised of representatives of local government and service districts. It is designed to assist you in making an evaluation of your wastewater system and financial planning. Please answer questions as accurately as possible to give you the best evaluation of your facility. If you need assistance please call, Emily Cantŏn. Utah Division of Water Quality: (801) 536-4342.

I. Definitions: The following terms and definitions may help you complete the worksheets and questionnaire:

User Charge (UC) - A fee established for one or more class(es) of users of the wastewater treatment facilities that generate revenues to pay for costs of the system.

Operation and Maintenance Expense - Expenditures incurred for materials, labor, utilities, and other items necessary for managing and maintaining the facility to achieve or maintain the capacity and performance for which it was designed and constructed.

Repair and Replacement Cost - Expenditures incurred during the useful life of the treatment works for obtaining and installing equipment, accessories, and/or appurtenances necessary to maintain the existing capacity and the performance for which the facility was designed and constructed.

Capital Needs - Cost to construct, upgrade or improve the facility.

Capital Improvement Reserve Account - A reserve established to accumulate funds for construction and/or replacement of treatment facilities, collection lines or other capital improvement needs.

Reserve for Debt Service - A reserve for bond repayment as may be defined in accordance with terms of a bond indenture.

Current Debt Service - Interest and principal costs for debt payable this year.

Repair and Replacement Sinking Fund - A fund to accumulate funds for repairs and maintenance to fixed assets not normally included in operation expenses and for replacement costs (defined above).

Part I: OPERATION AND MAINTENANCE

Complete the following table:

Question	Points Earned	Total
Are revenues sufficient to cover operation, maintenance, and repair & replacement (OM&R) costs ***at this time***?	YES = 0 points NO = 25 points	0
Are the projected revenues sufficient to cover operation, maintenance, and repair & replacement (OM&R) costs for the ***next five years***?	YES = 0 points NO = 25 points	25
Does the facility have sufficient staff to ensure proper O&M?	YES = 0 points NO = 25 points	0
Has a dedicated sinking fund been established to provide for repair & replacement costs?	YES = 0 points NO = 25 points	0
Is the repair & replacement sinking fund adequate to meet anticipated needs?	YES = 0 points NO = 25 points	0
	TOTAL PART I =	25

Part II: CAPITAL IMPROVEMENTS

Complete the following table:

Question	Points Earned	Total
Are present revenues collected sufficient to cover all costs and provide funding for capital improvements?	YES = 0 points NO = 25 points	0
Are projected funding sources sufficient to cover all projected capital improvement costs for the ***next five years***?	YES = 0 points NO = 25 points	25
Are projected funding sources sufficient to cover all projected capital improvement costs for the ***next ten years***?	YES = 0 points NO = 25 points	25
Are projected funding sources sufficient to cover all projected capital improvement costs for the ***next twenty years***?	YES = 0 points NO = 25 points	25
Has a dedicated sinking fund been established to provide for future capital improvements?	YES = 0 points NO = 25 points	0
	TOTAL PART II =	75

Part III: GENERAL QUESTIONS

Complete the following table:

Question	Points Earned	Total
Is the wastewater treatment fund a separate enterprise fund/account or district?	YES = 0 points NO = 25 points	0
Are you collecting ***95%*** or more of your sewer billings?	YES = 0 points NO = 25 points	0
Is there a review, at least annually, of user fees?	YES = 0 points NO = 25 points	0
Are bond reserve requirements being met if applicable?	YES = 0 points NO = 25 points	0
	TOTAL PART III =	0

Part IV: PROJECTED NEEDS

Estimate as best you can the following:

Cost of projected capital improvements (in thousands)	2014	2015	2016	2017	2018
	300	325	350	375	400

Point Summation

Fill in the values from Parts I through III in the blanks provided in column 1. Add the numbers to determine the MWPP point total that reflects your present financial position for meeting your wastewater needs.

Part	Points
I	25
II	75
III	0
Total	100

Municipal Wastewater Planning Program (MWPP)
Collection System Section

Owner Name: SYRACUSE

Name and Title of Contact Person:

DAREL Webb

Environmental Superintendent

Phone: 801 825-7235

E-mail: DWebb@Syracuseut.com

PLEASE SUBMIT TO STATE BY: March 1, 2014

Mail to: MWPP - Department of Environmental Quality
c/o Paul Krauth, P.E.
Division of Water Quality
195 North 1950 West
P.O. Box 144870
Salt Lake City, Utah 84114-4870
Phone : (801) 536-4346

Form completed by

Darel Webb

Part I: SYSTEM AGE

A. What year was your collection system first constructed (approximately)?

Year 1960

B. What is the oldest part of your present system?

Oldest part 53 years

Part II: BYPASSES

A. Please complete the following table:

Question	Number	Points Earned	Total Points
How many days last year was there a bypass, overflow or basement flooding by untreated wastewater in the system due to rain or snowmelt?	0	0 times = 0 points 1 time = 5 points 2 times = 10 points 3 times = 15 points 4 times = 20 points 5 or more = 25 points	0
How many days last year was there a bypass, overflow or basement flooding by untreated wastewater due to equipment failure? (except plugged laterals)	0	0 times = 0 points 1 time = 5 points 2 times = 10 points 3 times = 15 points 4 times = 20 points 5 or more = 25 points	0
		TOTAL PART II =	0

B. The Utah Sewer Management Program defines sanitary sewer overflows into two classes:

Number of Class 1 SSOs in Calendar year 2013 0

Number of Class 2 SSOs in Calendar year 2013 1

Class 1- a Significant SSO means a SSO or backup that is not caused by a private lateral obstruction or problem that:

(a) effects more than five private structures;
(b) affects one or more public, commercial or industrial structure(s);
(c) may result in a public health risk to the general public;
(d) has a spill volume that exceeds 5,000 gallons, excluding those in single private structures; or
(e) discharges to Waters of the state.

Class 2 – a Non-Significant SSO means a SSO or backup that is not caused by a private lateral obstruction or problem that does not meet the Class 1 SSO criteria.

C. Please specify whether the bypass(es) was caused a contract or tributary communities, etc. - NA -

Part III: NEW DEVELOPMENT

A. Please complete the following table:

Question	Points Earned	Total Points
Has an industry (or other development) moved into the community or expanded production in the past two years, such that either flow or wastewater loadings to the sewerage system were significantly increased (10 - 20%)?	No = 0 points Yes = 10 points	0
Are there any major new developments (industrial, commercial, or residential) anticipated in the next 2- 3 years, such that either flow or BOD_5 loadings to the sewerage system could significantly increase (25%)?	No = 0 points Yes = 10 points	10
	TOTAL PART III =	10

B. Approximate number of new residential sewer connections in the last year

202 new residential connections

C. Approximate number of new commercial/industrial connections in the last year

0 new commercial/industrial connections

D. Approximate number of new population serviced in the last year

750 new people served

Part IV: OPERATOR CERTIFICATION

A. How many collection system operators are currently employed by your facility?

3 collection system operators employed

B. What is/are the name(s) of your DRC operator(s)?

Robert Whiteley

DAREL Webb

C. You are required to have the collection DRC operator(s) certified at ***Grade III***

What is the current grade of the DRC operator(s)? III

D. State of Utah Administrative Rules require all operators considered to be in DRC to be appropriately certified. List all the operators in your system by their certification class.

Not Certified _____

Small Lagoons _____

Collection I _____

Collection II _____

Collection III 2 + 1 Anticipated in April

Collection IV _____

E. Please complete the following table:

Question	Points Earned	Total Points
Is/are your DRC operator(s) currently certified at the appropriate grade for this facility? (see C)	Yes = 0 points No = 50 points	0
How many continuing education units has each of the DRC operator(s) completed over the last 3 years?	3 or more = 0 points less than 3 = 10 points	0
	TOTAL PART IV =	0

Part V: FACILITY MAINTENANCE

A. Please complete the following table:

Question	Points Earned	Total Points
Do you follow an annual preventative maintenance program?	Yes = 0 points No = 30 points	0
Is it written?	Yes = 0 points No = 20 points	20
Do you have a written emergency response plan?	Yes = 0 points No = 20 points	20
Do you have an updated operations and maintenance manual	Yes = 0 points No = 20 points	20
Do you have a written safety plan?	Yes = 0 points No = 20 points	0
	TOTAL PART V =	60

Part VI: SUBJECTIVE EVALUATION

This section should be with the system operators.

A. Has your system completed it's the Utah Sewer Management Program.

Yes _____ NO X

B. Describe the physical condition of the sewer collection system: (lift stations, etc. included)

All of our Collection System is gravity Flow. The past 20 years we've installed new PVC pipe which is the majority of the City. There Are A Few Areas with Concrete pipe being used And is in Fair Condition.

C. What sewerage system improvements does the community have under consideration for the next 10 years?

Slip Lining, New pipe replacement to increase Capacity, Spot repairs for bellies, off set Joints, And Lateral Connections.

D. Explain what problems, other than plugging have you experienced over the last year

Rocks, debris, Roots, grease buildup, off SET Joints, protruding Service Laterals, infiltration.

E. Is your community presently involved in formal planning for system expansion/upgrading? If so explain.

Yes, We Are developing A model for the Sewer Collection System. This model will determine the System Capacity And Future Needs.

F. Has your system completed it's *System Evaluation and Capacity Assurance Plan* As defined by the Utah Sewer Management Program.

Yes _____ NO X

G. Does the municipality/district pay for the continuing education expenses of operators?

ALWAYS X SOMETIMES _____ NO _____

If they do, what percentage is paid?

approximately 100 %

H. Is there a written policy regarding continuing education and training for wastewater operators?

YES X NO _____

I. Any additional comments? (Attach additional sheets if necessary.)

POINT SUMMATION

Fill in the values from Parts II through V in the blanks provided in column 1. Add the numbers to determine the MWPP point total that your wastewater facility has generated for the past twelve months.

Part	Points
II	0
III	10
IV	0
V	60
Total	70

COUNCIL AGENDA
February 11, 2014

Agenda Item **"16"** General Plan Amendment

Factual Summation

- Any question regarding this agenda item may be directed at Jenny Schow, Planner
- Please see attached Memorandum and Supporting documentation
- Please see attached Ordinance

Mayor
Terry Palmer

City Council
Brian Duncan
Mike Gailey
Craig Johnson
Karianne Lisonbee
Douglas Peterson

Interim City Manager
Steven Marshall

Factual Summation

- Any questions regarding this items may be directed at Jenny Schow, Planner, and representative Planning Commissioners
- See the attached General Plan Amendment Packet

MEMORANDUM

To: Mayor and City Council
From: Community & Economic Development Department
Date: February 5, 2014

Subject: City Council Approval of a General Plan Amendment for the Colby Bond (KW Advisory Group) request for a General Plan change from Commercial 2 (C-2) to Residential 3 (R-3) Zone for property located at approximately 750 South 2000 West 11.63 Acres, Parcel Identification 12-735-0008 and 12-735-0009.

Background

The applicant has submitted this request to provide a transition from the existing R-2 residential development to the adjacent Commercial 2 Zone and to meet the increased market demand that favors traditional single family residential development.

The Planning Commission held a public meeting on February 4, 2014 for this General Plan Amendment request. All items noted in staff reports have been addressed by the Planning Commission.

The following documents have been included in your packets for your use and review:

- Existing and Proposed General Plan
- Proposed Site Plan

Planning Commission Recommendation

On February 4, 2014, the Syracuse City Planning Commission recommended that the Syracuse City Council approve the General Plan Amendment from KW Advisory Group, located at approximately 750 S 2000 W, for the requested change from C-2 Commercial to R-3 Residential Zone, subject to all applicable requirements of the City's municipal codes.

ORDINANCE NO. 14-02

AN ORDINANCE AMENDING THE SYRACUSE CITY GENERAL PLAN ADOPTED IN 1976, AS AMENDED.

WHEREAS, in 1967 a Syracuse Preliminary Master Plan was prepared for the Syracuse Planning Commission as a part of the Davis County Master Plan Program, said preliminary plan being prepared by R. Clay Allred and Associates, Planning Consultants; and

WHEREAS, in 1976 a Comprehensive Plan for Syracuse was prepared by the Davis County Planning Commission with assistance of Architects/Planners Alliance Planning Consultants and Wayne T. Van Wagoner and Associates, Traffic and Transportation Consultants which plan was financially aided by a grant from the Department of Housing and Urban Development through the Utah State Department of Community Affairs; and

WHEREAS, the 1976 Comprehensive Plan was amended in 1988 and the title changed to the Syracuse City Master Plan; and

WHEREAS, The Syracuse City General Plan was again amended in 1996, 1999, 2003, 2006, 2009, 2011, and 2012 to incorporate appropriate and necessary changes to the General Plan as approved at that time; and

WHEREAS, public hearings have been held by the Planning Commission to receive public input regarding proposed changes; and

WHEREAS, the Planning Commission has proposed amendments to the General Plan Map that provide development objectives with respect to the most desirable use of land within the City for residential, recreational, agricultural, commercial, industrial, and other purposes, and which residential areas shall have the most desirable population density in the planning districts of the City to benefit the physical, social, economic, and governmental development of the City and to promote the general welfare and prosperity of its residents;

NOW, THEREFORE, BE IT RESOLVED BY THE CITY COUNCIL OF SYRACUSE CITY, STATE OF UTAH, AS FOLLOWS:

Section 1. General Plan Map. That the Syracuse City General Plan Map, attached and reflected hereto as Exhibit A, is hereby adopted and any ordinances or resolutions in conflict herewith are hereby repealed to the extent of such conflict.

Section 2. Severability. If any section, part or provision of this Ordinance is held invalid or unenforceable, such invalidity or unenforceability shall not affect any other portion of this Resolution, and all sections, parts and provisions of this Resolution shall be severable.

Section 3. Effective Date. This Ordinance shall become effective immediately upon its passage.

PASSED AND ADOPTED BY THE CITY COUNCIL OF SYRACUSE CITY, STATE OF UTAH, THIS 11th DAY OF FEBRUARY, 2014.

SYRACUSE CITY

ATTEST:

_____ _____

Cassie Z. Brown, City Recorder Terry Palmer, Mayor

Voting by the City Council:

	"AYE"	"NAY"
Councilmember Peterson	____	_____
Councilmember Lisonbee	____	_____
Councilmember Duncan	____	_____
Councilmember Gailey	____	_____
Councilmember Johnson	____	_____

General Plan Amendment
Approx.750 S 2000 W

N

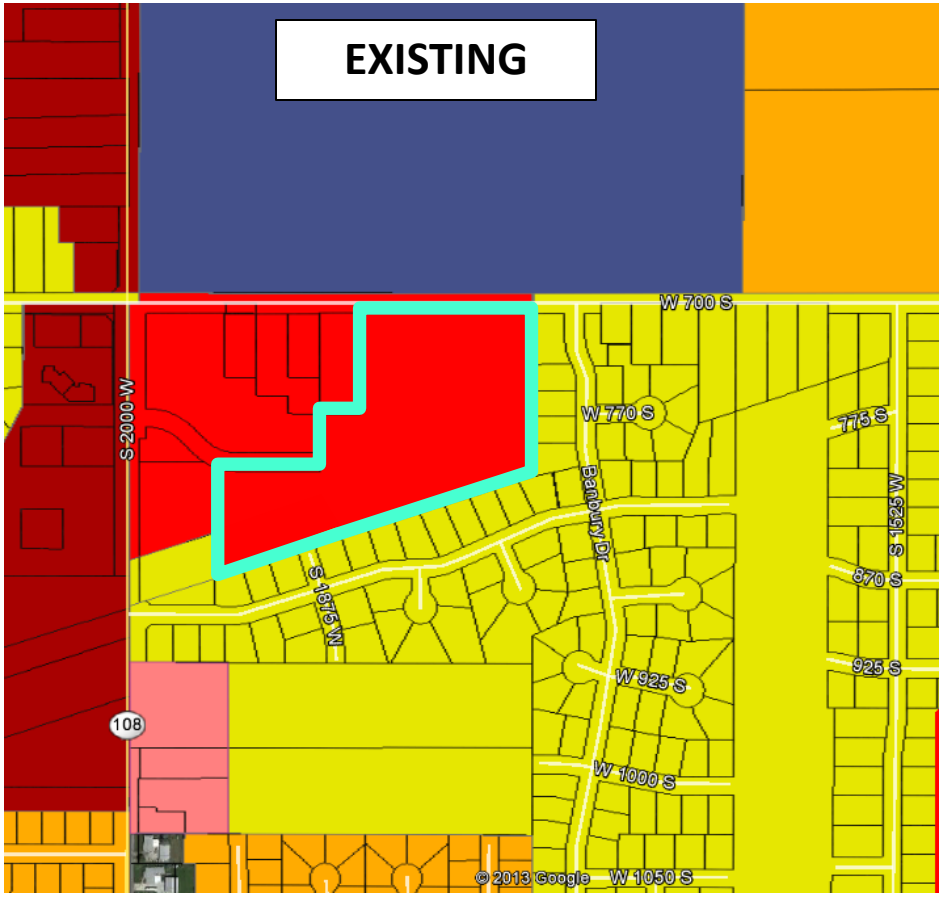

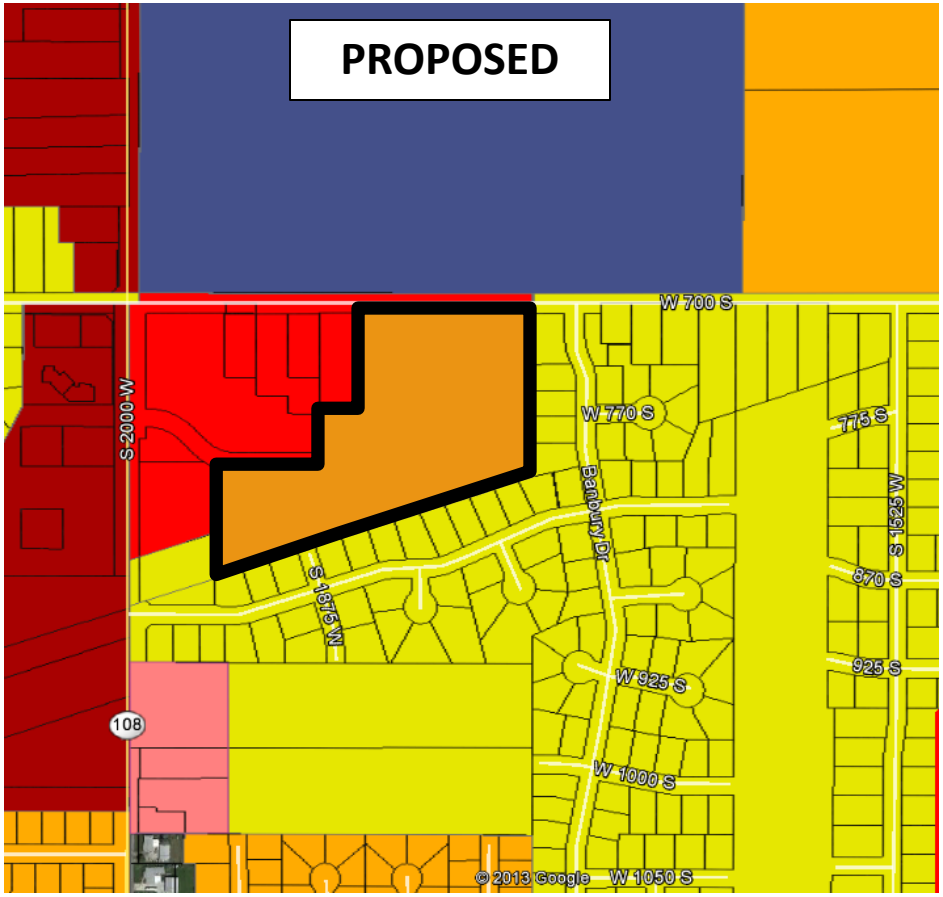

- Agriculture A-1
- R-1 (2.90 dwellings per net acre)
- R-2 (3.79 dwellings per net acre)
- R-3 (5.44 dwellings per net acre)
- PRD (8.0 dwellings per net acre)
- R-4 (14.52 dwellings per net acre)
- Professional Office
- Commercial II
- General Commercial Zone
- Industrial Zone
- Town Center Overlay Zone
- Sensitive Overlay Zone
- RDA & EDA Boundary

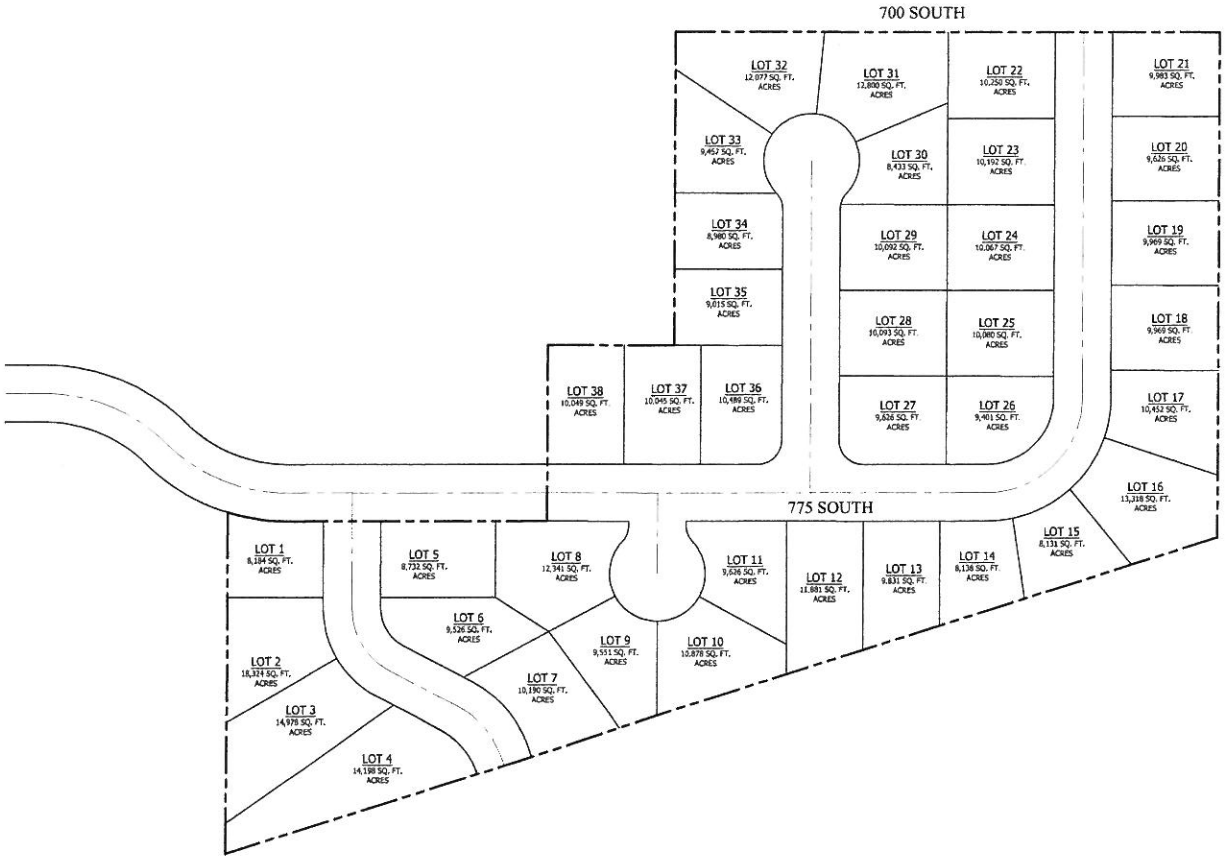

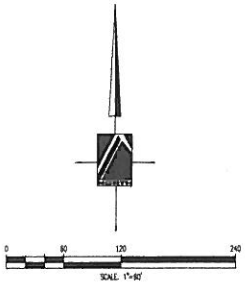

LEGEND

NOT ALL ITEMS IN THE LEGEND MAY BE APPLICABLE

- BOUNDARY LINE
- CENTERLINE
- SETBACK LINE
- EASEMENT LINE
- EX. IRRIGATION LINE
- EX. LAND DRAIN
- EX. OVERHEAD POWER LINE
- EX. STORM DRAIN
- EX. SANITARY SEWER
- EX. SECONDARY WATERLINE
- EX. TELEPHONE LINE
- EX. GAS LINE
- EX. CULINARY WATERLINE
- EX. FENCE
- P.O.B. POINT OF BEGINNING
- EX. EXISTING
- WV WATER VALVE
- SSMH SANITARY SEWER MANHOLE
- FH FIRE HYDRANT
- SDCB STORM DRAIN CATCH BASIN
- SD BOX STORM DRAIN BOX
- UP UTILITY POLE
- SECTION CORNER
- MONUMENT
- CONTROL POINT
- EX. SPOT ELEVATION
- 4250 EG CONTOUR LINE
- BAR & CAP OR NAIL & WASHER TO BE SET
- EXISTING ASPHALT

PINNACLE
Engineering & Land Surveying, Inc.
Layton • West Bountiful • Mount Pleasant
2720 North 350 West, Suite #108
Layton, UT 84041
Phone: (801) 773-3910
Fax: (801) 773-3925

TITAN SUBDIVISION
CONCEPTUAL PLAN
FOR: COLBY BOND
750 SOUTH 2000 WEST
SYRACUSE, UT
13-065

REVISION	BY	DATE

SHEET #	SURVEYED BY	DATE	DESIGNED BY	DATE	DRAWN BY	DATE	APPROVED BY	DATE
1			SD	11/2013	SD	11/2013	SJP	11/2013

ALL INFORMATION SHOWN HEREON IS NOT FINAL OR APPROVED UNTIL ALL AGENCIES STAMP AND SIGN THEIR ... ANY USE OF THIS DRAWING AND ITS CONTENT WITHOUT FULL APPROVAL IS DONE AT THE PROPER USE ONLY BY PINNACLE ENGINEERING & LAND SURVEYING, INC. DOES NOT ASSUME LIABILITY FOR ANY SECTION